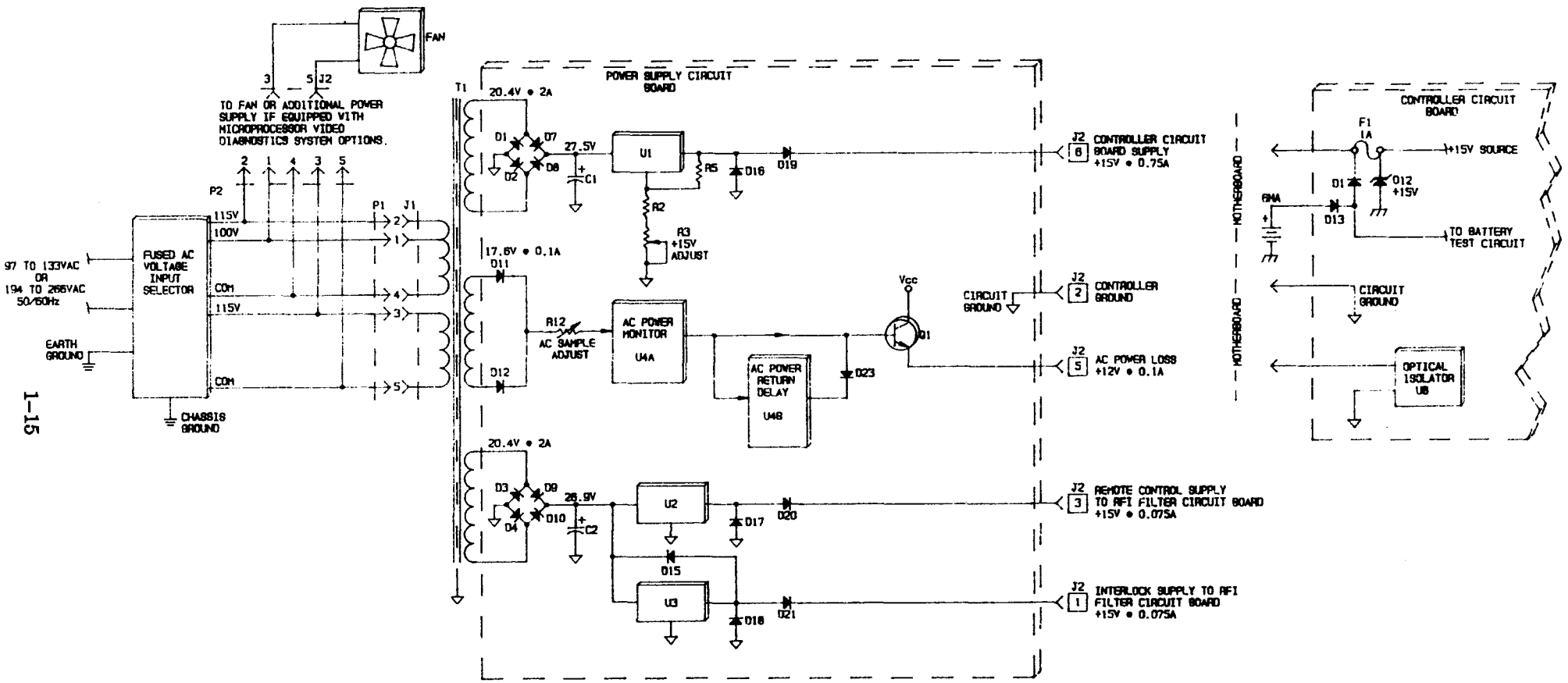

COPYRIGHT © 1990 BROADCAST ELECTRONICS, INC

597-0032-440

FIGURE 1-3. CONTROLLER POWER SUPPLY SIMPLIFIED SCHEMATIC

1–69. The 15 volt potential is routed to the controller circuit board to provide operating potentials for the logic circuitry. Fuse F1 provides overload protection and diode D12 limits transients on the supply to 15.2 volts. Diodes D1 and D13 are steering diodes which isolate the 9 volt battery from the 15 volt supply and allow the battery to be tested while the circuit operates from the 15 volt input. In case of power failures, the 15 volt supply will be maintained at 9 volts by current flow through D1 and D13 to allow transmitter restoration to proceed automatically. Battery drain is approximately six milliamperes which allows three days of memory. The battery is not maintained on charge and must be replaced when discharged.

1–70. **Positive Twelve Volt AC Loss-of-Power Supply.** A 17.6 volt secondary (open–circuit voltage) of transformer T1 is half–wave rectified into a dc supply by diodes D11 and D12. The dc potential is routed through ac sample adjust potentiometer R12 to ac power monitor U4A. U4A is a retriggerable one–shot which biases transistor Q1 on during normal ac power operating conditions.

1–71. When a power failure condition occurs, the output of U4A will go LOW to bias Q1 off and route a LOW ac power loss command to an optical coupler on the transmitter controller circuit board. When ac power is re–applied to the unit, the output of U4A will go HIGH and trigger ac power return delay one–shot U4B. After a 500 millisecond delay to allow the power supplies to completely energize, the output of U4B will go HIGH to bias Q1 on and route a HIGH ac power loss command to the controller circuit board.

1–72. **Positive Fifteen Volt Remote Control Supply.** A 20.4 volt secondary of transformer T1 is full–wave bridge–rectified into a +27 volt supply by diodes D3, D4, D9, and D10 and filtered by capacitor C2. This rectified voltage is routed to U2 which regulates the input potential to a +15 volt source for the remote control circuitry. Diode D20 prevents capacitor discharge through the regulator during power failures.

1–73. Integrated circuit U2 is a three–terminal fixed positive regulator containing internal thermal overload protection and short–circuit current limiting features. Further protection for U2 is provided by diode D17 which protects the regulator from a reverse polarity potential applied to the output.

1–74. **Positive Fifteen Volt Interlock Supply.** The input to regulator U3 is paralleled from the same +27 volt supply as regulator U2. Integrated circuit U3 is a three–terminal fixed positive regulator containing internal thermal overload protection and short–circuit current limiting features. Further protection for U3 is provided by diode D18 which protects the regulator from a reverse polarity potential applied to the output and diode D15 which protects the regulator from a short circuit on the regulator input.

BROADCAST ELECTRONICS, INC.

Appendix D

Examples of Widely Used Broadcast Audio Processors
Offering
Automatic Control of Transmitter Modulation Level

OPTIMOD-FM DIGITAL

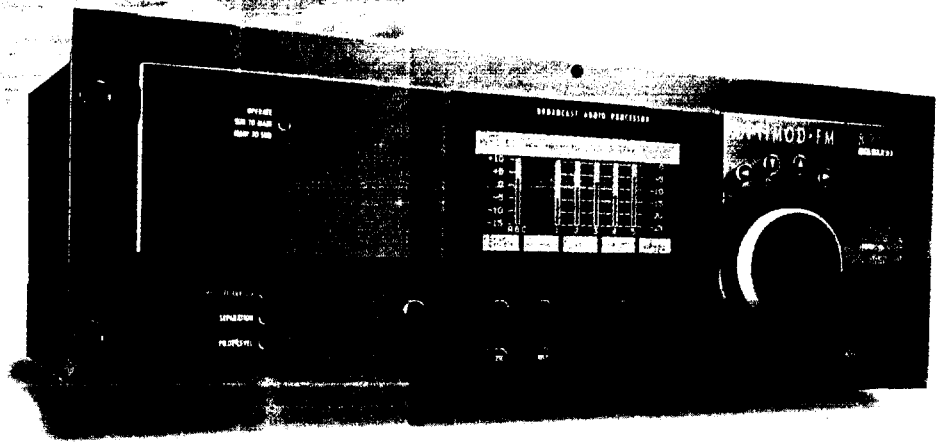

OPTIMOD-FM 8200

Digital Audio Processor with Stereo Generator

The OPTIMOD-FM 8200 Digital Audio Processor provides complete audio processing and transmitter protection for FM broadcasters. The 8200 interfaces with all commonly found transmitters and studio-to-transmitter links, and is designed to grow with future advances in digital FM technology.

In the tradition of our analog OPTIMOD-FM 8100A, OPTIMOD-FM 8200 provides a strong, high-quality sound that attracts and holds listeners. Its fully-digital audio processing improves the quality and clarity of the successful "OPTIMOD Sound," while adding changeable processing structures, programmability, expandability and PC interface capability for control from your studio, home or car.

The power of digital propels the 8200 to new levels of performance and functionality. OPTIMOD-FM 8200 is a true digital audio processor—the audio is digitized and all control functions are digital. In addition to a better sound, digital makes the OPTIMOD-FM more user-friendly, more programmable and more flexible. For example, the Automation Preset Switching feature changes the 8200's processing on a programmed schedule, a function ideal for dayparting or for stations with multiple formats. Simply put, because the OPTIMOD-FM is easier to adapt to a station's programming needs, it will produce more benefit, more of the time.

Expandability and Upgradability

DSP cards can be added as needed when future software upgrades and additional software-based processing configurations require more processing power.

Built-in stereo generator/encoder

Orban's RAM-based Digital Hadamard Transform Baseband Encoder™ produces an extremely well-controlled spectrum, with indiscernably low noise and distortion and outstanding separation.

Digital I/O Cards

Digital I/O makes it easy to connect your 8200 to a digital system without multiple digital/analog conversions and their cumulative distortions.

The 8200D/32 is a basic card suitable for most broadcast transmission systems. It accepts a broadcast-standard 32kHz AES/EBU input, and produces a broadcast/standard pre-emphasized 32kHz AES/EBU output.

The 8200D/SRC offers additional features of sample rate conversion on input and output, plus a variety of output pre-emphasis options. It accepts and produces AES/EBU-standard signals at sampling rates of 32, 44.1, or 48kHz. The output can be at a different sampling rate than the input, and can be flat or pre-emphasized.

OPTIMOD Studio Chassis 8200ST

When OPTIMOD-FM 8200 or OPTIMOD-AM is installed at the transmitter, install OPTIMOD Studio Chassis 8200ST before the mono or dual STL to protect it from peak and high frequency overload. The 8200ST also controls average levels on the link to maximize its dynamic range, translating to improved signal quality at the receiver.

orban

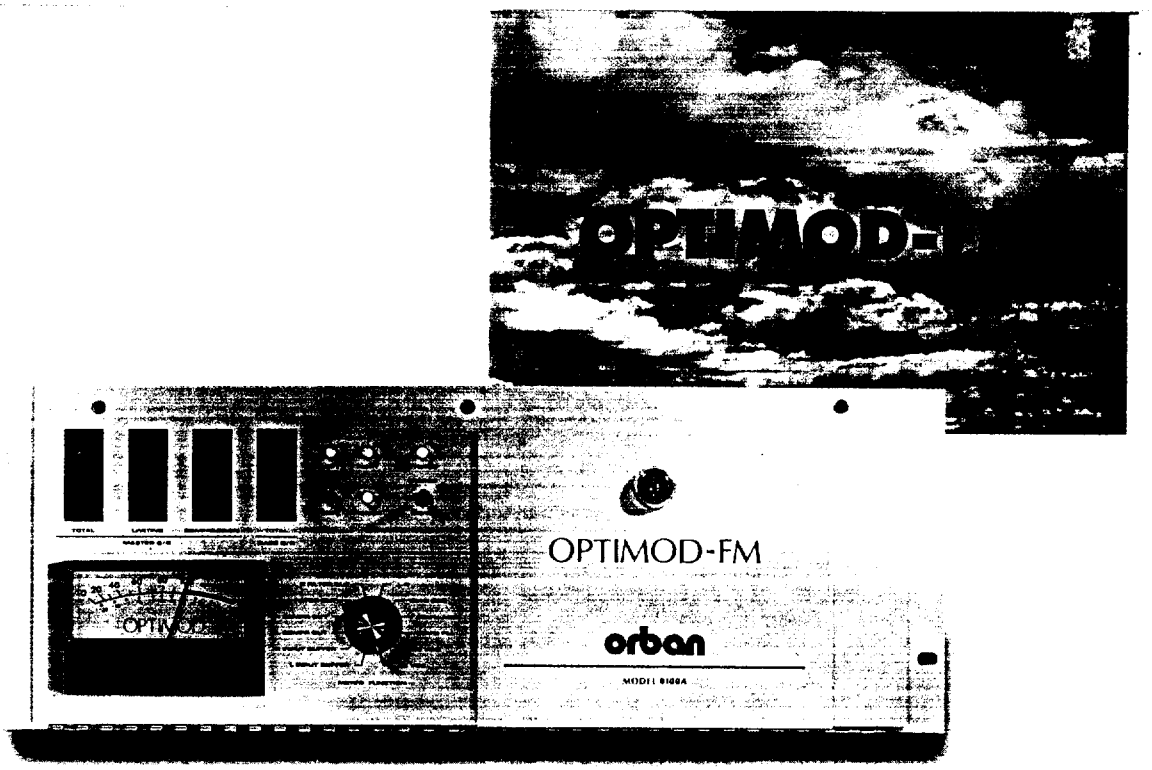

OPTIMOD-FM 8100A1
AUDIO PROCESSOR WITH STEREO GENERATOR

Experience has shown that stations with OPTIMOD-FM stand out with a strong, solid, high-quality signal that attracts and holds listeners. It's an open and natural sound, with a uniquely favorable combination of loudness, impact, clarity and brightness.

The analog 8100A combines level control, peak control and stereo generation functions into an integrated audio processing system for FM broadcast. It lets you adjust your station's sound to suit your format and competitive situation, and it precisely controls peak levels to guarantee maximum loudness without over-modulation. When desirable, OPTIMOD-FM can be adjusted to provide automatic bass equalization—increasing bass on thin-sounding source material and decreasing it with heavy bass material.

OPTIMOD-FM's built-in stereo generator, pre-emphasis and filtering are handled before the peak control to prevent loss of loudness, and to eliminate modulation-robbing overshoots caused by outboard stereo generators.

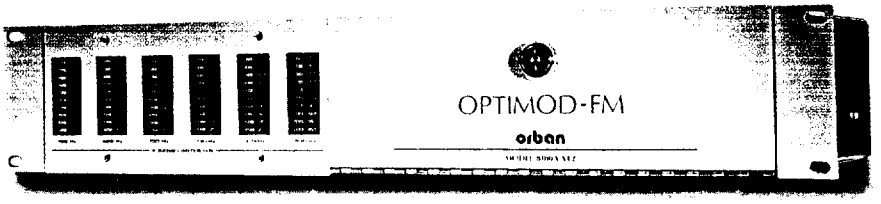

OPTIMOD 8100AXT2
SIX-BAND LIMITER ACCESSORY

You may want an even louder or more processed sound than is possible with the OPTIMOD-FM alone. The XT2 adds six-band limiting and multi-band distortion cancelled clipping to the OPTIMOD-FM, and provides separate control over compression, density, bass warmth, "punch," presence, brilliance and clipping. It will make your station notably louder and brighter—yet with a sound that is still open and musical. Your station's sound will seem to "jump out" of car and portable radios. The bass will have more punch, more impact. The mid-range will have a dramatic sense of presence. The highs will be in perfect balance with the mid-range and bass; always present but never shrill or strident.

OPTIMOD 8100AST
STUDIO CHASSIS ACCESSORY

The Studio Chassis is installed in the studio just before the telephone lines or dual STL. It provides level control to maximize the available dynamic range without overload. Compressor circuit cards from the main OPTIMOD-FM chassis (at the transmitter) get relocated to the Studio Chassis, providing STL protection without introducing redundant processing that could degrade sound quality.

AM

stereo

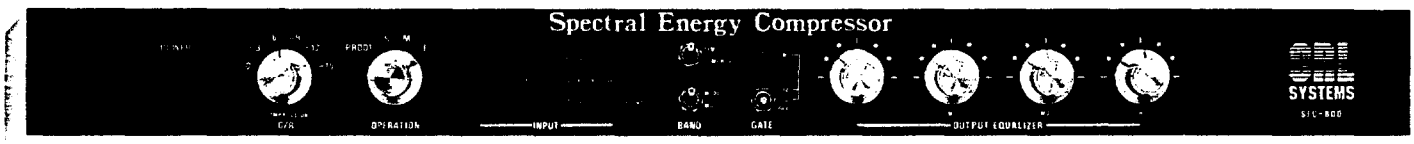

THE SMP-900A HAS BEEN UPGRADED TO OUR SMP-950

from **CRL SYSTEMS**

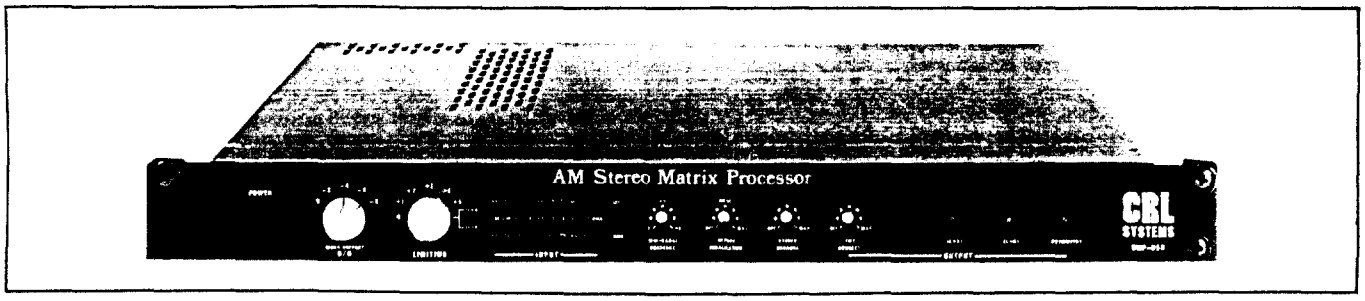

SMP-950

TRI-BAND AM STEREO MATRIX PROCESSOR

The CRL SMP-950 Tri-band AM STEREO MATRIX PROCESSOR unit offers state-of-the-art circuitry coupled with precise implementation of the NRSC(*) standards for the loudest, cleanest signal on the AM dial. AM Stereo is quite different from FM and requires special techniques to provide full stereophonic fidelity while maintaining full monophonic compatibility. The CRL patented matrix processing circuitry is designed specifically to meet this criteria.

The input section of the SMP-950 consists of a gated wideband compressor with over 20 dB of input range. The amount of input (mono support) G/R is variable from 0 to +8 dB in 2 dB steps and is adjusted via a front panel mounted switch. The attack time of the input compressor section is program dependent. By establishing a consistent audio level prior to limiting, "pumping" and other detrimental side effects caused by excessive limiting are eliminated. An additional feature of the unit is the user variable stereo enhance circuit. By varying the L-R gain (up to 3 dB) ahead of the limiter section, perceived stereo separation may be greatly enhanced.

The tri-band limiter section of the SMP-950 utilizes a CRL patented (U.S. Patent #4,679,239) combination of sum and difference (matrix) limiting and adjustable single channel limiting. This ensures full monophonic compatibility and preserves high density negative L only or R only peaks from causing excessive negative carrier modulation which could cause receiver decoding problems. A front panel switch allows the user to select up to 5 dB of limiting in 1 dB steps.

Our unique tri-band limiter design has crossover frequencies of 1 kHz and 4 kHz. The input to the mid band (vocal presence band) limiter is separately adjustable from 0 to +5 dB of additional limiter pre-loading via a front panel adjustment slot. Pre-emphasis is selected via a front panel slot control, and is continuously variable from flat to over 75 uS. A detent in the control action is provided for setting the unit to NRSC(*) standard pre-emphasis. To compensate for inadequate bass response in receivers, a selectable bass boost circuit provides a 3 dB boost at 105 Hz, with an aggressive roll off below. An internal jumper selects this option.

The audio low-pass filtering action of the SMP-950 is provided by CRL's unique resonant filter clipper circuitry (U.S. Patent #4,383,299). This filter eliminates excessive clipping harmonics to allow attainment of maximum loudness capability without audible distortion. A rear panel switch selects either NRSC(*) or 11 kHz bandwidth. Positive modulation asymmetry (up to 140%) and low freqency tilt correction controls are provided on the front panel. A mono audio output is available on the SMP-950, with separate level and low-frequency tilt controls.

The input and outputs to the unit are on rear mounted standard barrier strips and are fully RFI filtered. A 10 segment led input indicator allows precise level adjustment. Positive and negative clipping activity leds are front panel mounted. A detachable IEC line cord supplies power to the unit.

(*) National Radio Standards Committee

SMP-950 Tri-Band AM Stereo Matrix Processor Functional Block Diagram

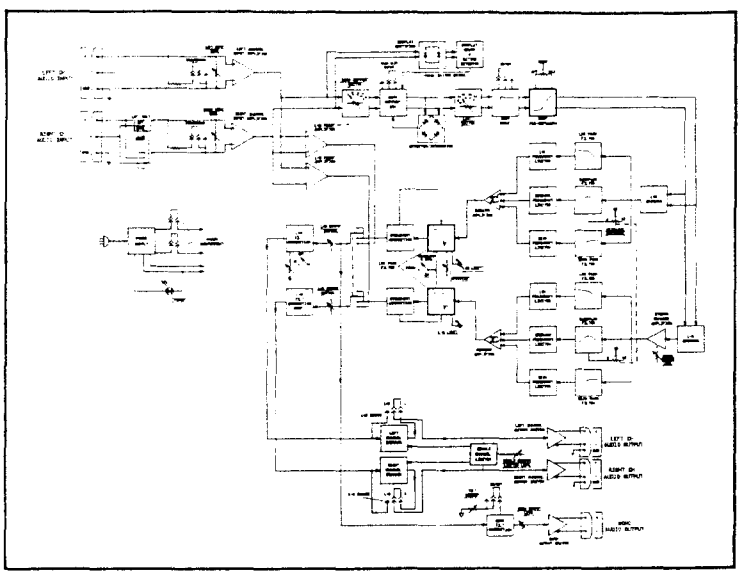

SMP-950 SPECIFICATIONS

ELECTRICAL

INPUTS	(Ref. 0 dBm = 0.775 VRMS)
Type:	Active balanced (differential)
Impedence:	> 10K ohms bridging
Termination:	Selectable 600 ohms
Level (adjustable):	< -10 to +20 dBm; ref. to 0 dB indication on front panel level meter
OUTPUTS	
Type:	Active balanced (differential)
Impedence:	100 ohms (to drive 600 ohm load)
Level (adjustable):	< -20 to +18 dBm; ref. to 100% negative modulation level, as established internally
Monaural output:	Provides summed limited signal with separate tilt correct provision to drive monaural standby transmitter or to bypass the stereo exciter
FREQUENCY RESPONSE	(0 dB ref. at 400 Hz, +10 dBm input/output)
9.5 kHZ filter bandwidth selected:	50 Hz to 8 kHz, +0/-1.5 dB -3 dB at 9.5 kHz > 30 dB atten. at 10.5 kHz, > 40 dB atten. at 11.0 kHz Conforms to NRSC standard using required dynamic measurement method
11 kHz filter bandwidth selected:	50 Hz to 10 kHz; +0/-1.5 dB -3 dB at 11 kHz > 30 dB atten. at 13.5 kHz
Proof Mode:	50 Hz to 15 kHz; +0/-1.0 dB
HARMONIC DISTORTION	(+10 dBm input/output, 20 kHz bandwidth)
9.5 or 11 kHz BW:	< 0.25% over selected operating bandwidth, at or below 100% negative modulation level
Proof Mode:	< 0.1%
S+N/N	> 60 dB in operate mode > 65 dB in proof mode
STEREO SEPARATION	
Operate mode:	> 35 dB over selected operating BW, > 45 dB typical
Proof mode:	> 50 dB
CROSSTALK	
Operate mode:	L+R to L-R to L-R, > 35 dB over selected operating BW, > 40 dB typical
Proof mode:	> 40 dB
INPUT GAIN REDUCTION	Input leveling AGC; selectable in 2 dB increments to 8 dB, >20 dB overall range; Strapped for stereo operation
PRE-EMPHASIS	Continuously variable from flat to over 75 uS via front panel adjustment slot. A detent position in the control action is set at the NRSC standard pre-emphasis position.
STEREO ENHANCE	Adjustable 0 to +3 dB
MID-BAND PRESENCE BOOST	Continuously variable from 0 to +5 dB via a front panel adjustment slot, with a detent in the control action at the +3 dB position. Band center of the presence band boost is 2 kHz.
BASS PRE-EMPHASIS	Internally selectable bass boost function can be placed in circuit to improve apparent low frequency response of many AM receivers.
LIMITING	Selectable in 1 dB steps from 0 to +4 dB, tri-band limiter with crossover frequencies of 1 kHz and 4 kHz.
SINGLE CHANNEL LIMITER	Adjustable threshold from OFF to -50%; used to prevent more than -70% envelope modulation produced by a single channel (required by Motorola C-QUAM® system).
TILT CORRECT	Selectable circuit allows correction of low frequency phase shift found in some plate-modulated transmitters.
ASYMMETRY	Adjustable threshold allows up to +140% positive peak modulation
INDICATORS	1. 10-Segment LED-type input level meters with a 22 dB (28 dB with OVLD) dynamic range 2. L + R limit indicators monitor activity of patented overshoot-corrected filter circuitry.
MODE SWITCH	Selects operate, proof, Reverse, and Left only for test and set up purposes

GENERAL SPECIFICATIONS

POWER REQUIREMENTS	100-130 or 200-250 VAC, 48-440 Hz, 20 VA maximum, EMI suppressed, IEC connector standard
OPERATING TEMPERATURE RANGE	32 to 122 degrees F (0 to 50 degrees C)
OPERATING HUMIDITY	0-95% RH, non-condensing
OPERATING ALTITUDE	0-15,000 feet AMSL
DIMENSIONS	19" (48.3 cm)W, 1.75" (4.5 cm) H, 16" (40.6 cm) D, including protruding controls and connectors
SHIPPING WEIGHT	18 lbs. (including standard accessories)

® C-QUAM is a registered Trademark of Motorola Inc.

THE PROFESSIONAL ONES

CRL SYSTEMS

CRL SYSTEMS
TEMPE, ARIZONA 85282 U.S.A.
TELEX: 350464
(602) 438-0888
(800) 535-7648
FAX 602-438-8227

MBL-100

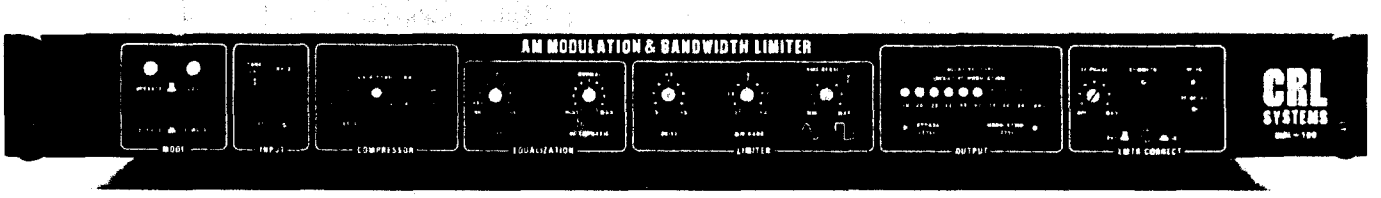

NEWS/TALK/SPORTS AUDIO PROCESSING SYSTEM

...for maximum AM coverage

- Designed specifically for News/Talk/Sports formats
- Maximum loudness and density capability
- 7.5kHz Audio bandwidth exceeds NRSC-1 standards
- Improves intelligibility of speech in receivers

from CRL SYSTEMS

MBL-100 DESCRIPTION

The MBL-100 is designed to increase loudness and coverage area of AM monaural news/talk/sports formats. By combining powerful audio processing topology, and 7.5 kHz audio low-pass filtering, this multi-band limiter provides very high levels of average modulation density. This results in increased coverage area, and better reception of program material in noisy or interference prone environments.

Special correction controls have been included into the MBL-100 to maximize modulation performance of your transmission system. In addition a special test signal is provided to allow easy set up of these controls. Several of the processing parameters may be remote controlled for added flexibility.

INPUT BAND-PASS FILTERING

Input band-pass filtering is provided to remove program material below 50 Hz and above 7.5 kHz before entering the processing circuitry. By removing very low frequency program material, common problems such as negative carrier shift, and power supply (LC resonate type) resonance are greatly reduced. In addition, cue and subsonic control tones are also removed. Frequencies above 7.5 kHz are attenuated to further reduce distortion and other side effects.

SPEECH ASYMMETRY REMOVAL

The human voice is typically asymmetrical in nature. This can play havoc on gain reduction action unless some correction circuitry is added. The MBL-100 uses a constant amplitude phase shifter to remove speech asymmetry. An internal jumper is included to defeat this function if desired.

TRANSMITTED SPECTRUM COMPARISON

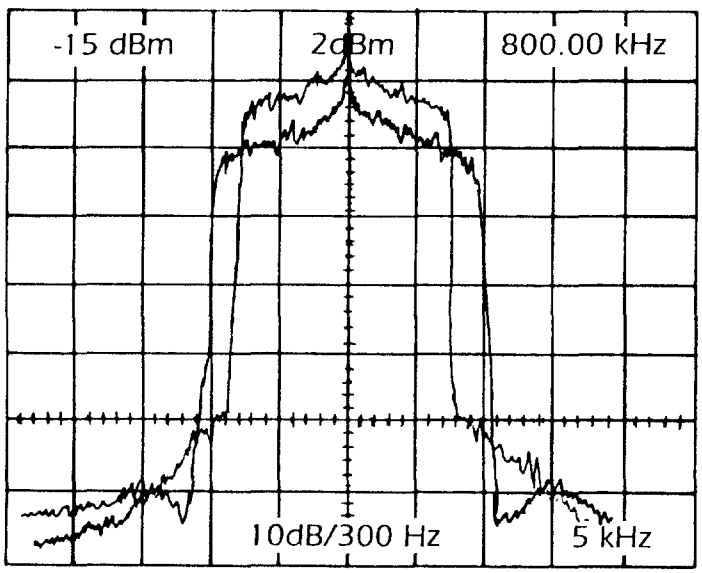

——— CRL NRSC PROCESSING

——— MBL-100 NEWS TALK PROCESSOR

DUAL BAND AGC/COMPRESSOR

The Dual Band Gated AGC/Compressor smoothly removes level variations in program material, and provides compression of program peaks. Our unique control circuitry allows average levels to be controlled by wide-band AGC action, while peak levels are controlled by dual-band compressor action. Attack time is determined by program material, resulting in instantaneous adjustment regardless of program source. Release times may be controlled by the user via internal jumpers. Three release times are available. The MBL-100 also features AGC gating circuitry. This circuit freezes action at 20 dB below G/R threshold to prevent amplification of the noise floor during pauses in the program content.

EQUALIZATION SECTION

The MBL-100 has two equalizer sections that are controlled via front panel screwdriver adjustment slots.

The first equalizer section is a high-pass filter that is variable from 55 Hz to 145 Hz, to boost or remove low frequency program material as needed. In addition a low frequency boost (up to +3 dB at 100 Hz may be selected via an internal jumper.

The second equalizer section controls high frequency boost (or pre-emphasis). This control allows continuous control from flat through NRSC-1 (or 75 µs) pre-emphasis. To allow for differing transmission conditions this function may be remote controlled.

TRI-BAND LIMITER AND FINAL WIDE-BAND LIMITER

Following the equalizer section is a powerful tri-band limiter developed especially to augment vocal program content. Crossover frequencies of 350 Hz and 2.4 kHz are used. The function of the tri-band limiter is to reduce the peak-to-RMS ratio of the program material. A final wide-band limiter is then used to produce the added density and loudness that the unit features. Fast AGC action combined with instantaneous limiting control peak levels without the audible distortion found in older units. A single front panel control allows easy setting of station loudness.

FINAL OUTPUT FILTER

To achieve tight modulation bandwidth control, the MBL-100 uses a high quality multi-section 7.5 kHz low-pass filter. The low-pass filter action of the MBL-100 is much tighter than conventional AM processors, and fully meets NRSC-1 specifications. By tightly controlling audio bandwidth, high frequency information that will not be reproduced by the listener's receiver is not transmitted. This saves valuable transmitter power, which can now be used to transmit more densely modulated in band program information. The effect of this is an increase of signal loudness and coverage area. Overshoot corrected and delay equalized Elliptical filters are used to provide an extremely sharp roll-off. Stop band attenuation is greater than 50 dB with any type of program material.

TRANSMITTER CORRECTION

The MBL-100 produces a very dense, precisely limited audio signal. This allows very high levels of average modulation that will maximize loudness and coverage of your station. Any low frequency roll-off or high frequency overshoot occurring in the transmitter will cause loss of limit control provided by the MBL-100. This translates into a loss of loudness and coverage area. Uncorrected modulation losses of 30 to 40 percent are not uncommon.

Transmitter correction in the MBL-100 is provided to compensate for these problems. Low frequency errors (often known as low frequency tilt) can be caused by any type of low frequency roll-off in the transmitter. To correct for this problem the MBL-100 has an adjustable gain/phase equalizer, which is adjustable via a front panel screwdriver slot.

High frequency overshoots are caused by various transmitter modulator stages, and the station's antenna system. To correct for this problem the MBL-100 has an adjustable delay and high frequency shelving equalizer. These controls are accessed via a front panel screwdriver slots.

Deciding how much transmitter correction is needed is often not an easy task. An internal test signal is provided to make accurate adjustment of correction controls very easy. The test signal contains a bandwidth limited spectrum (75 Hz to 300 Hz) of amplitude limited waveforms, designed to modulate the transmitter at a low level (30%). By observing the modulated RF carrier with an oscilloscope, any tilting or overshoots may be observed, and easily corrected.

BYPASS/TEST MODE CONTROLS

A "Bypass" (or test) mode is provided for transmitter testing and maintenance. All active processing circuitry sections (AGC and limiting) are bypassed in this mode. The sharp audio low-pass and input high pass filters remain in the signal path however. Keeping the filters in the signal path helps to prevent accidental damage to the transmitter during testing.

A special front panel control is provided to set the transmitter's modulation level in the bypass mode. This control provides a convenient method to set modulation levels during testing without disturbing controls set for normal on-air operation.

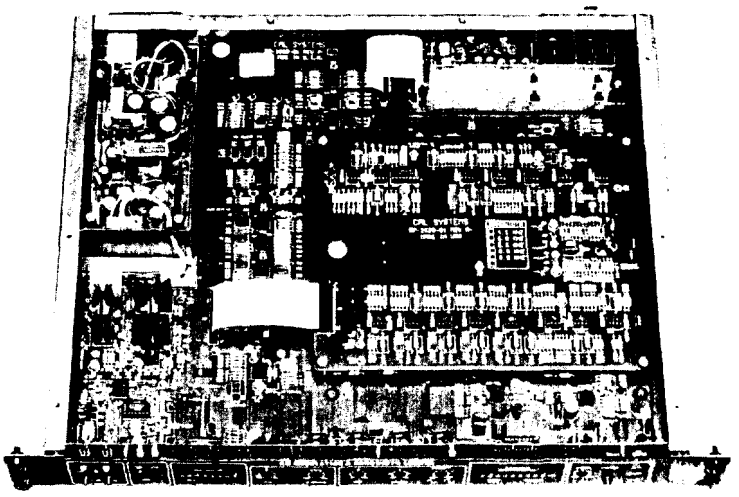

MBL-100 INTERIOR VIEW

REMOTE CONTROL OPERATION

Several of the processing parameters in the MBL-100 may be remote controlled. Remote control operation of high frequency emphasis and RMS density are provided via two rear panel inputs. A control voltage from 0 to 5 volts DC is used to drive the remote inputs. This feature is useful for day-night transmitter settings. In addition the OPERATE/BYPASS mode may also be remote controlled.

CONSTRUCTION

The MBL-100 is designed for use in harsh transmission environments. The zinc plated steel chassis and hardened aluminum front panel provide rugged physical strength and high immunity to outside interference. Multi-section EMI/RFI filtering are used on all inputs and outputs. Four circuit boards make up the MBL-100 and are interconnected by high reliability ribbon cables. All component designators and test points are silkscreened on the PCB. Gas tight sockets are used on all integrated circuits.

BLOCK DIAGRAM MBL-100

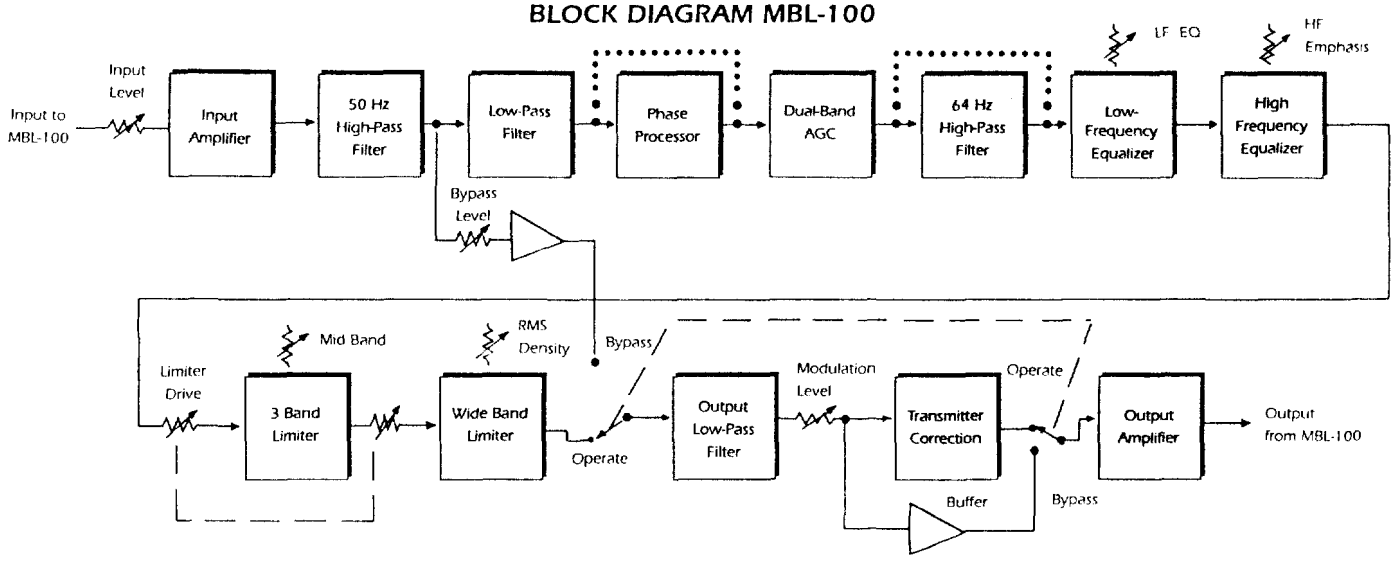

MBL-100 NEWS/TALK PROCESSOR

OVERALL SPECIFICATIONS

OPERATING MODES

Operate/Bypass - Front panel switch is provided to select either Operate (normal operating mode) or Bypass (used for transmitter testing and maintenance). Bypass mode bypasses all audio processing circuits, but retains a steep band-pass filter with overshoot correction to prevent overmodulation and out-of-band frequencies from modulating the transmitter; front panel bi-color indicator provided to clearly show the mode selected.

Local/Remote - Front panel switch is provided to select either Local (normal operating mode) or Remote; Remote mode allows remote operation of HF Emphasis, RMS Density and Operate/Bypass mode. Front panel bi-color indicators provided to clearly show the mode selected. Operate/ Bypass status output provided for remote telemetry.

PROGRAM INPUT

(Ref. 0 dBm = .775 VRMS into 600 Ohms)

Type: Active balanced (differential); EMI suppressed

Impedance: 10 K ohms balanced bridging, 5 K ohms unbalanced

Termination: 600 ohms (internally selectable)

Level: Front panel adjustable from -20 to +20 dBm referenced to -9 dB of gain reduction; overload and tone calibration indicators provided.

REMOTE CONTROL INPUT

(HF EMPHASIS and RMS DENSITY)

Type: Active unbalanced; EMI suppressed, Impedance: 5 K ohms

Level: 0 to +5 VDC; 0 V = minimum (control setting), +5 V = maximum (control setting)

REMOTE CONTROL

(OPERATE/BYPASS mode)

Type: Opto-isolated (switch to ground method)

Status Output: Opto-isolated current source (25 mA max.)

OUTPUT

Type: Active balanced (transformerless); EMI suppressed

Impedance: 100 ohms or 600 ohms balanced (internally selectable)

Level: Front panel adjustable from -20 to +20 dBm for 100% negative modulation; separate controls provided to set modulation level in operate and bypass modes.

MONITOR OUTPUT

Type: Active unbalanced (transformerless); EMI suppressed

Impedance: 50 ohms (designed to drive 600 ohm load)

Level: Fixed +10 dBm (3.5 V peak = 100% neg. modulation)

FREQUENCY RESPONSE

(Referenced at 20 dB below gain reduction, 400 Hz ref., +10 dBm input/output level, HF emphasis = flat)

Operate Mode: +/- 1 dB 60 Hz - 7.5 KHz
+/- 3 dB 50 Hz - 7.5 KHz

Bypass Mode: +/- 0.5 dB 60 Hz - 7.5 KHz
+/- 3 dB 50 Hz - 7.5 KHz

HARMONIC DISTORTION

(+10 dBm input/output level, 20 KHz bandwidth, HF EMPHASIS = flat)

Operate Mode: 1.0% over selected bandwidth, < .25% typical

Bypass Mode: .1% over selected bandwidth

INTERMODULATION DISTORTION

(+10 dBm input/output level, SMPTE method, 4:1 ratio, 20 dB below gain reduction)

Operate Mode: .5%

Bypass Mode: .15%

S + N/N

Referenced to 200 Hz, 20 KHz bandwidth, +10 dBm output = 90% modulation, threshold of gain reduction, high frequency emphasis in flat.

Operate Mode: 70 dB

Bypass Mode: 75 dB

GAIN CONTROLLER SECTION

FILTERING

Input High-Pass: Cascaded 47Hz 3rd order Tchebyschyeff, and 50Hz 5th order elliptical function; -3 dB at 50 Hz, attenuates frequencies < 37 Hz greater than 50 dB.

64Hz High-Pass: Internally selectable 64 Hz. 1st order Butterworth.

LF EQ High Pass: Front panel control allows tuning of 2nd order Tchebyschyeff from 55 Hz to 145 Hz, internally selectable peaking, may be defeated with front panel control, cascaded with 64 Hz HPF when enabled.

Input Low-Pass: Cascaded 3rd order Tchebyschyeff, and 5th order elliptical function produces a 7.5 KHz cutoff frequency, and attenuates frequencies above 8.7 KHz by more than 25 dB.

PHASE ROTATOR

Internally selectable; reduces asymmetrical effects common to most vocal sources.

GAIN REDUCTION

24 dB for any frequency in selected bandwidth. RANGE (calibrated on front panel display in 3 dB steps, 0 to -21 dB, 8 steps total).

GAIN REDUCTION METHOD

Two independent linearized bands of gain reduction riding atop a wideband AGC platform.

COMPRESSION RATIO

20:1 typical above 9 dB of gain reduction

TIME CONSTANTS

Program dependent attack, release time internally selectable (Slow, Medium, Fast) for wideband, lowband, and highband.

CROSSOVER FREQUENCY

450 Hz

GAIN REDUCTION ELEMENTS

Semiconductor voltage controlled resistor

(patented by CRL, U.S. Patent # 4,393,346)

GATE FUNCTION

Locks gain reduction at 20 dB below G/R threshold to prevent amplification of noise floor, front panel indicator provided to show gating.

LIMITER SECTION

HIGH FREQUENCY EMPHASIS

Continuously variable from flat to over 75 µs. A detent position provides NRSC-1 standard pre-emphasis.

LIMITER TOPOLOGY

3 parallel bands of limiting, followed by a wideband peak limiter.

TRI-BAND LIMITER CROSSOVER FREQUENCIES

350 Hz, 2.4 KHz provided by 3rd order Butterworth filters.

CONTROL ELEMENTS

Voltage controlled resistor (patented by CRL).

MID-BAND LIMITER CONTROL

Front panel control allows greater than +/- 2 dB adjustment to tailor vocal characteristics.

LIMITER DRIVE CONTROL

Front panel control set drive levels to tri-band limiter and wideband limiter simultaneously; 0 to 6 dB range.

RMS DENSITY CONTROL

Front panel control allows MBL-100 loudness to be easily controlled; controls wideband peak limiter attack time characteristics; front panel indicator provided to show amount of RMS density produced.

LOW PASS OUTPUT FILTER

Overshoot corrected, delay compensated; topology is 7th order elliptical function, 5th order delay equalizer, overshoot correction, 3rd order elliptical function, 3rd order delay equalizer, overshoot correction (internally selectable), 18.0 KHz 1st order Butterworth, 22.0 KHz 2nd order Butterworth; -1 dB at 7.50 KHz. Attenuates frequencies above 9.5KHz greater than 50 dB. Exceeds NRSC-1 standards using required dynamic measurement method.

PEAK MODULATION CONTROL

Within 2% for all program material, typically less than 1%.

OUTPUT LEVEL MONITORING

Front panel relative output level display (calibrated in 10% steps, 10-100%, 10 steps total); monitors negative modulation, relative to limit threshold in output filter.

MODULATION LEVEL CONTROL

Front panel control adjusts transmitter modulation level in Operate Mode.

BYPASS LEVEL CONTROL

Front panel control adjusts transmitter modulation level in Bypass Mode for transmitter testing and maintenance.

TRANSMITTER CORRECTION SECTION

INTERNAL TEST SIGNAL

Front panel switch to turn on/off internal dynamic test signal; used to adjust LF Phase, HF Delay, HF EQ controls; provides band of low frequency square-waves (75 Hz to 300 Hz) at 30% modulation (internally adjustable to other modulation levels).

LF PHASE CONTROL

Front panel adjustable low frequency gain/phase tilt correction; effectively corrects 1st and 2nd order roll-off; may be defeated via front panel.

HF DELAY CONTROL

Front panel control adjusts non-linear group delay equalizer to correct ringing and overshoots.

HF EQ CONTROL

Front panel control adjust high frequency shelving equalizer to correct ringing and overshoots.

SYMMETRY CONTROL

Front panel control adjusts positive peak modulation to correct for non-linear modulation; 0 to 3 dB range (100 - 140%).

GENERAL

POWER

80 - 160 or 160 - 260 VAC (selectable), 47 - 450 Hz, 30 VA max, EMI suppressed; IEC connector standard

OPERATING TEMPERATURE RANGE

0 to 50 degrees C (32 to 122 degrees F)

OPERATING HUMIDITY

0 -95% relative humidity, non-condensing

OPERATING ALTITUDE

0 to 15,000 feet above mean sea level

DIMENSIONS

48.3 cm (19") W, 4.5 cm (1.75") H, 40.6 cm (16") D, including protruding controls and connectors.

INPUT/OUTPUT CONNECTORS

Standard 3 pin XLR for audio input and output. Standard 9 pin D for remote control.

SHIPPING WEIGHT

8.2 Kg (18 lbs), including standard accessories

OPTIONAL ACCESSORIES

SPARE COMPONENTS KIT

Contains an assortment of replacement semiconductors and other non-readily available components.

RACK SLIDE KIT

Provides two high quality rack slides to provide easy access to internal circuitry.

THE PROFESSIONAL'S CHOICE

CRL SYSTEMS

Circuit Research Labs, Inc.
2522 West Geneva Drive
Tempe, Arizona 85282-3192 U.S.A.
(800) 535-7648 (602) 438-0888 FAX (602) 438-8227
Bulletin Board System (602) 438-0459

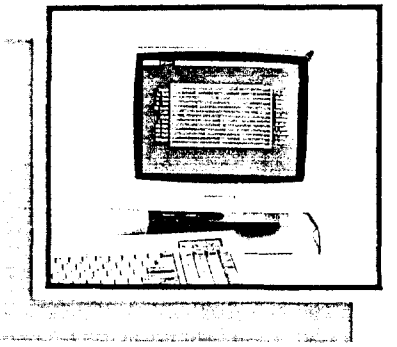

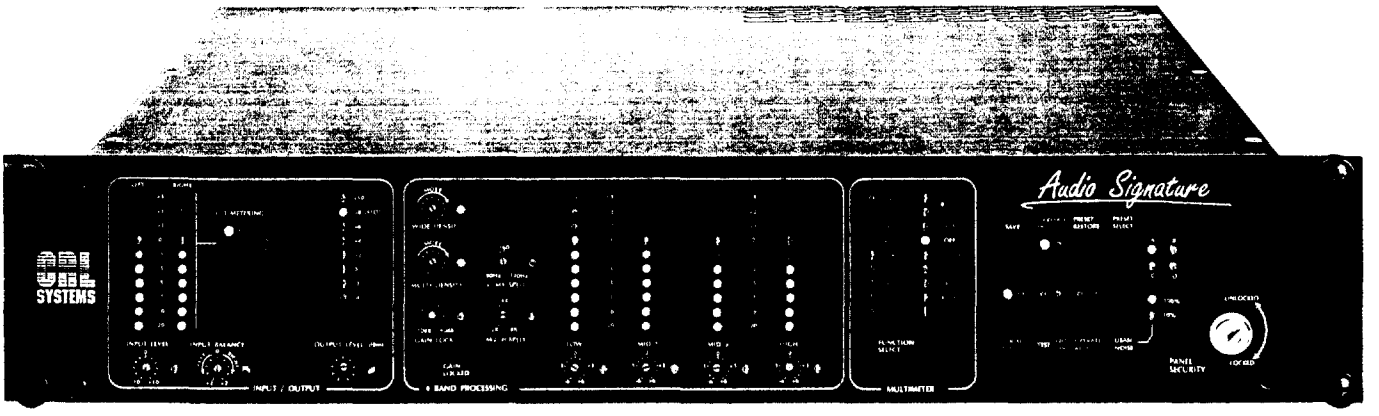

from CRL SYSTEMS

the Audio Signature™

WHAT IS IT?

The Audio Signature is the most advanced audio processor that CRL has ever offered.

Microprocessor based, it is a fully software controlled wideband and four band audio processing system in one package.

If you've been searching for that hard to find sound difference, that certain sound variation or unique sound characteristic, then you've been searching for...

the Audio Signature™

Unmatched in user friendliness and programmable power, it is ideal for FM, AM stereo, TV and production applications.

Combining the power of digital with the best of analog, the Audio Signature is the key to your audio's distinction.

A few of Audio Signature's many features are:

- Digitally Processed User Controls
- Separate Wideband & Multiband Control
- User Adjustable Multiband Crossovers
- Real Time Analysis Output Monitoring
- 8 Position Audio Diagnostic Metering
- 4 Memory Recall Sound Settings
- PC & Automation Remote Control Capability

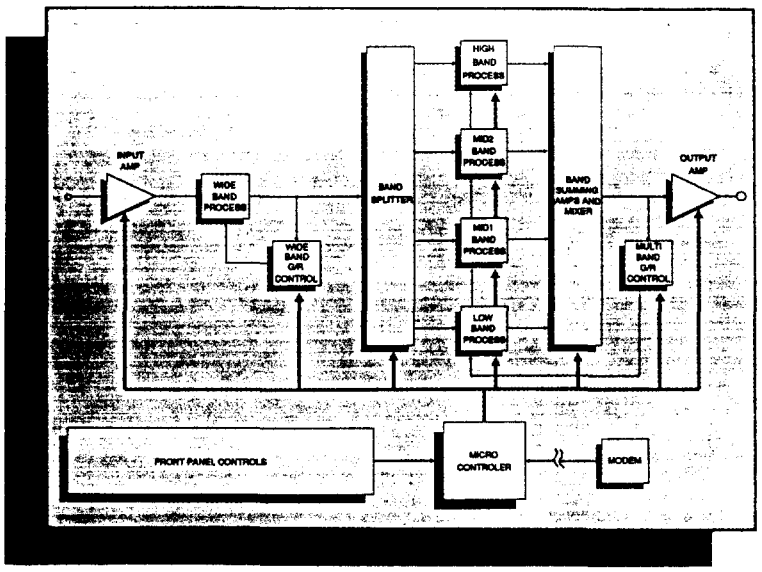

The Audio Signature Block Diagram

DIGITALLY PROCESSED USER CONTROLS

Even though all major front panel controls feed the microprocessor system, users are provided with a totally 'real time' touch and feel NOT normally associated with digital equipment.

The Audio Signature's powerful but simple to operate character is accomplished by using our FT Digital™ control system.

FT Digital™ stands for 'FRIENDLY TOUCH' Digital and describes exactly what our control system means to you, the Audio Signature user.

Most products have been designed with 'raise and lower' buttons and alpha-numeric displays with 100 plus positions of numeric or short-hand verbiage.

Asking users whether they could just walk up to such equipment and easily operate it produced one answer. We think you know which answer.

CRL's philosophy of digital equipment and control design is simple:

Do it DIGITAL, but do it FRIENDLY...

Our FT Digital control system is a method which provides the needed visual and physical feedback which gives you that 'natural' TOUCH and feel which makes operation easy.

Memory Setting Recall

A major feature of our FT Digital control system is to provide an EASY and ACCURATE recall of all sound setting controls which have been previously stored in memory.

The system provides both a fast and easy to understand method to recall all Input/Output and Processing settings stored in any of the 4 memory positions discussed later.

After pressing a memory recall button, simply adjust each control until the Led indicator beside it lights up. You now have the EXACT setting which was stored. That's all there is to it.

Simple Layout Organization

With all of its features and capability, the Audio Signature also has its controls organized in an easy to understand and simple to use layout.

To complement the FT Digital control system, the Audio Signature has its controls grouped into four simple to operate categories.

I/O calibration, Processing adjustment, Diagnostic metering and Memory programming.

This layout provides for easy adjustment in obtaining your special sound with the minimum of effort.

Amigo

FM AGC, Limiter & Stereo Generator

- **Extremely Competitive Price**
- **Easy to Install & Operate**
- **A Complete AGC, Limiter & Stereo Generator System**
- **Dual Band AGC with More than 25 dB Range**
- **Built in Stereo Sound Field Enhancement Circuitry**
- **Advanced Digitally Synthesized Multiplex Generator with more than 50 dB of Separation**
- **Separate Multiplex and Audio Outputs**

The Amigo is a new concept in FM audio processing systems. This single rack high unit contains a complete audio processing system - flexible and powerful, yet very easy to set up and use.

A Complete Audio Processor

The Amigo is a combination of dual band AGC followed by a variable pre-emphasis multi-band limiter and digitally synthesized stereo generator.

The first section of the Amigo is a wide range dual-band AGC with over 25 dB of range. The wide range of the AGC ensures precise level control over a wide variety of program material. Following the AGC section, there is a powerful multi-band limiter and audio low-pass filter section.

Our unique limiter/audio low-pass configuration provides exact peak modulation control while maintaining outstanding program clarity.

The Multiplex (Stereo) Generator is located after the limiter. A unique digital synthesis approach provides a flawless, drift free multiplex signal. In addition to a multiplex output, independent left and right audio outputs are provided. Flat or pre-emphasized audio may be selected, and the level is controlled from front panel pots.

Easy to Install

The Amigo is designed for quick and easy set up. Set the input level to match your source - the front panel 10 segment LED display allows quick calibration. Then adjust the Multiplex (Stereo) level to match your exciter or composite STL level. The AGC, Limiter and Multiplex generator sections are internally matched to each other. If your transmission system is not stereo ready, the Amigo may be operated in mono simply by turning the pilot control off.

Enhancing Your Sound Further

The Amigo has several control options that lets you further customize the sound of your station. An internal three position AGC jumper lets you select up to 12 dB of gain reduction.

Our exclusive stereo sound field enhancement circuitry is included in the Amigo. This circuit provides additional separation to stereo program material without effecting mono programs or voice. Two internal jumpers allow easy augmentation of your station's stereo image.

Front panel low frequency equalizer (bass boost) and limiter drive controls allow easy control of overall density and bass enhancement of your station.

Your Complete FM Processing System

The Amigo is by far the best performing unit in its class. Powerful yet simple! Plus the Amigo is designed to give you years of dependable service. Place one in service - discover how good your station can sound.

THE PROFESSIONAL'S CHOICE

CRL SYSTEMS®

Circuit Research Labs, Inc.
2522 West Geneva Drive
Tempe, Arizona 85282-3192 U.S.A.
(800) 535-7648 (602) 438-0888 FAX 438-8227
Bulletin Board System (602) 438-0459 Telex: 350464

Processor Section

INPUT (Reference 0 dBm = 0.775 VRMS)
TYPE: Active balanced (differential)
IMPEDANCE: > 10 k ohms balanced bridging
TERMINATION: 600 ohms (selectable)
LEVEL (adjustable): < - 10 dBm TO +20 dBm
(Referenced to 0 dB indication on front panel level meter)

AUX. OUTPUT
TYPE: Active balanced (differential)
IMPEDANCE: 100 ohms (designed to drive 600 ohm load)
LEVEL:
(Referenced to 100% modulation level as established internally)
Adjustable: < - 20 dBm TO +20 dBm
Fixed: +16 dBm for connection to SG-800A stereo generator

FREQUENCY RESPONSE
(Referenced at 20 dB below G/R, 400 Hz, +10 dBm in/out)
OPERATE MODE: 50 Hz to 15 kHz; +/- 1 dB
PROOF MODE: 50 Hz to 15 kHz; +/- .5 dB

HARMONIC DISTORTION
(+10 dBm input/output, 20 kHz bandwidth)
OPERATE MODE: < 0.25%, 50 Hz - 15 kHz (< 0.15% typical)
PROOF MODE: < 0.1%, 50 Hz - 15 kHz

S + N/N
(Ref to 5 kHz, level at threshold of G/R (80% mod.) 30 kHz bandwidth)
OPERATE MODE: > 80 dB, de-emphasized
PROOF MODE: > 85 dB, de-emphasized

STEREO SEPARATION (Not De-emphasized, worst case)
OPERATE MODE: > 60 dB, 50 Hz - 1 kHz
> 50 dB, 1 kHz - 10 kHz
PROOF MODE: > 70 dB, 50 Hz - 15 kHz

INPUT COMPRESSION
Input leveling G/R; selectable in 6 dB increments to 12 dB (internal)
> 25 dB overall range

LIMITING
Adjustable from 0 to +5 dB

TIME CONSTANTS
Program dependent

STEREO ENHANCE
Threshold: Adjustable from 3 dB of program separation to off (internal)
Enhance: Adjustable for 6 to 26 dB (internal) of enhancement (pgm controlled)

MODE SWITCH
Selects operate or proof mode (located on rear panel)

FRONT PANEL INDICATORS
Dual 10 - Segment LED type input level meters with 22 dB (26 dB with OVLD) dynamic range

LOW FREQUENCY ENHANCE
Adjustable from 60 to 90 Hz, 0 to 5 dB Boost

PRE-EMPHASIS
Flat, 50, or 75 microseconds

LOW PASS FILTER
Frequency Response (0 dB ref. at 400 Hz, +10 dBm input)
20 Hz to 15 kHz, +0.5/-1.0 dB

DYNAMIC CROSSTALK PROTECTION
> 55 dB (60 dB typical)

AUDIO OVERSHOOT
less than 5% (0.3 dB) maximum

Multiplex Encoder Section

COMPOSITE OUTPUT
LEVEL: .25 volts to 5 volts p-p, adjustable, into 50 ohms
.25 volts to 9 volts into open circuit

AUDIO FREQUENCY RESPONSE
(Ref. 0 dB @ 400 Hz, +10 dBm input)
20 Hz to 15 kHz, +/- 0.5 dB

TOTAL HARMONIC DISTORTION
(+10 dBm input level, 15 kHz bandwidth, stereo)
< 0.03%

INTERMODULATION DISTORTION
(+10 dBm input level, 15 kHz bandwidth, stereo)
< 0.03%, 60 Hz/7 kHz; 4:1 Ratio.

S+N/N
> 80 dB - below 100 % modulation @ 400 Hz, 75 uSec de-emphasis

LINEAR CROSSTALK AND STEREO SEPARATION
L to R, R to L > 50 dB, 20 Hz to 15 kHz (55 dB typical)
> 55 dB, 100 Hz to 10 kHz (60 dB typical)
L+R (Main) to L-R (Sub) > 50 dB, 50 Hz to 15 kHz (50 dB typical)
L-R (Sub) to L+R (Main) > 50 dB, 50 Hz to 15 kHz (50 dB typical)

NON-LINEAR CROSSTALK
L+R (Main) to L-R (Sub) > 60 dB, 20 Hz to 15 kHz (70 dB typical)
L-R (Sub) to L+R (Main) > 60 dB, 20 Hz to 15 kHz (70 dB typical)

DYNAMIC STEREO SEPARATION
> 50 dB; 50 Hz to 15 kHz

PILOT FREQUENCY STABILITY
+/- 1 Hz, +32 TO +122 degrees F.

PILOT PHASE
Digitally locked (no adjustment needed)

DYNAMIC PILOT PROTECTION
> 60 dB: measured in a 500 Hz bandwidth centered at 19 kHz

38 kHz SUPPRESSION
> 65 dB No adjustment necessary

SPURIOUS EMISSION SUPPRESSION
Above 53 kHz, >70 dB below 100% Modulation

Amigo Installations

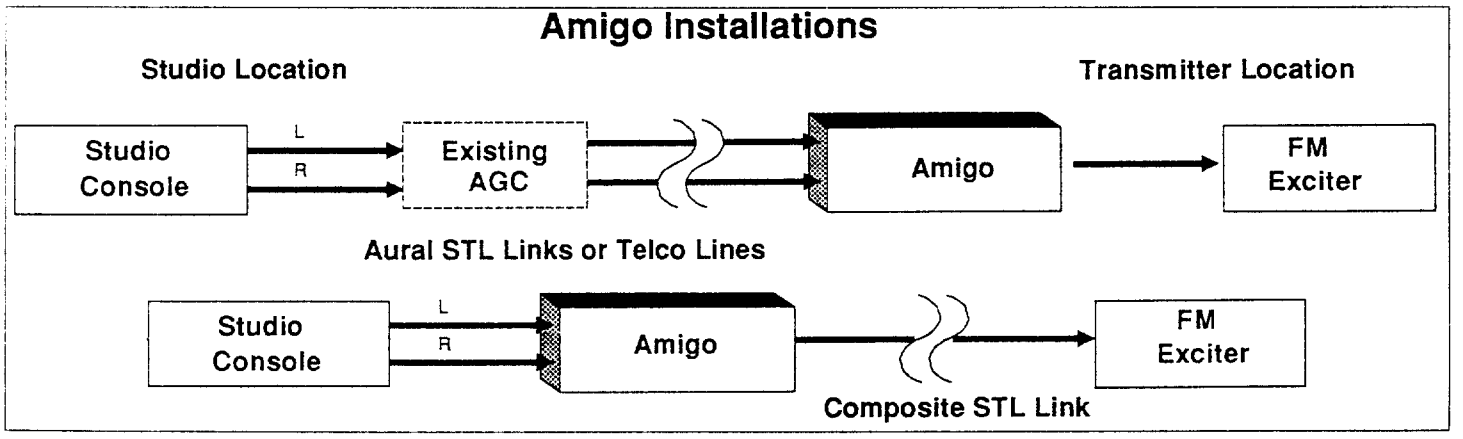

Printed on Recycled paper.

Amigo AM

MAY 31 94

BE 1

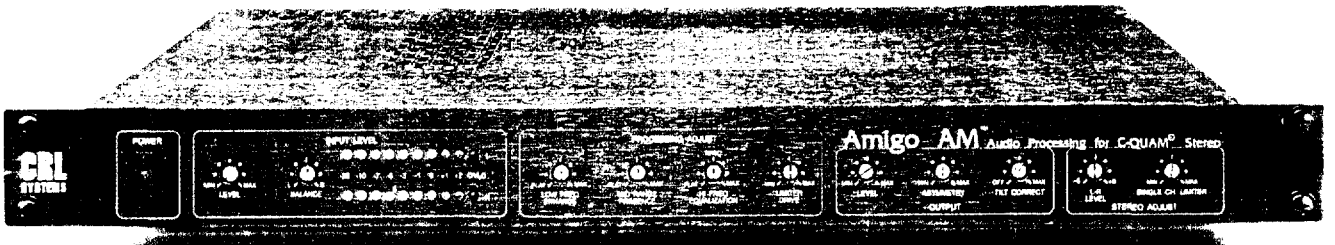

A Complete Audio Processing System for CQUAM® AM Stereo

- Quality Stereo For Your Listeners
- Maintains Mono Loudness & Coverage
- A Complete Matrix Processing System
- Easy to Install & Operate
- NRSC Compliant

Quality Stereo for Your Listeners

The decision to broadcast AM Stereo is very important. Protect your investment by treating your listeners with the best quality stereo possible. CRL AM Stereo products are known world wide as the best sounding products. With Amigo AM, your station will stand out on the dial!

A Complete Audio Processing System

CRL has taken all its best technology, combined it into one high performance unit. The Amigo AM was designed with your station in mind, economical, powerful, yet simple to use! The Amigo AM is a complete audio processing system. Included are a Dual Band AGC, patented 3 Band Stereo Matrix Limiter, Single Channel Limiting, NRSC Output Filtering plus a full set of processing controls to customize your station's sound.

A wide range dual band AGC ensures consistent station loudness, even when the disk jockeys do not watch audio levels closely. When changing from one audio source to another and during "voice overs", the dual band design produces a very natural sound, even with sudden changes in audio levels.

Stereo and mono loudness is produced by a powerful 3 Band Matrix Limiter. First, a matrix divides the audio into mono and stereo. These are further divided into 3 bands — bass, mid-range and treble. Next, each band is separately processed to increase stereo and mono loudness. The result is outstanding quality with loud and dynamic bass, mid range and treble for your stereo and mono listeners.

NRSC Compliance is guaranteed by CRL's patented output filter. This filter exceeds all NRSC-1 standards for the control of your station's occupied bandwidth.

A full set of processing controls is included to adjust your station's sound. Low, mid range and high frequency equalizer controls allow you to set equalization just the way you want it. Loudness is adjusted with the Limiter Drive control.

Easy to Install and Operate

Installing AM Stereo audio processing has never been easier. A handy input meter allows quick adjustment of the input level. Next, turn all of the processing and stereo controls to 12 o'clock. It's easy! Transmitter modulation is adjusted with the output level and asymmetry controls. Stereo adjustments are fine tuned. Finally, the processing controls can be fine tuned. That's it! Just about anybody at your station can install the Amigo AM for stereo!

Works Great in Mono, too.

If you are thinking about going stereo in the future, but need to improve your processing now — the Amigo AM is for you. The Amigo AM can drive 2 mono transmitters, now. When you upgrade to stereo, the Amigo AM can drive your main stereo transmitter plus a mono standby transmitter.

More Features

The Amigo AM has a number of features that let you take full control of your station's sound. Our exclusive stereo enhancement circuit lets you broaden your station's stereo image without affecting voice or mono program material. If you have an older transmitter, or narrow bandwidth antenna system, the Amigo AM has several correction controls that can greatly improve your station's performance and coverage area!

Try One Today!

The Amigo AM is by far the best performing processor in its class. Powerful yet simple! Discover how good your station can sound!

THE PROFESSIONAL'S CHOICE

CRL SYSTEMS®

Circuit Research Labs, Inc.
2522 West Geneva Drive
Tempe, Arizona 85282-3192 U.S.A.
(800) 535-7648 (602) 438-0888 FAX (602) 438-8227
Bulletin Board System (602) 438-0459

SPECIFICATIONS

INPUT (Reference 0 dBm = 0.775 VRMS)

TYPE: Active balanced (differential)

IMPEDANCE: 600 ohms termination or 10 k ohms balanced bridging (selectable)

LEVEL CONTROL: -10 dBm to +20 dBm range

BALANCE CONTROL: +/- 2dB range

METERING: Dual 10 segment LED input level meter with 28 dB dynamic range

STEREO OUTPUT

TYPE: Active balanced (differential)

IMPEDANCE: < 100 ohms balanced (for 600 ohm loads)

LEVEL CONTROL: -5 dBm to +12 dBm for 100% modulation

MODE: Internal jumpers select stereo or L+R (mono) / L-R outputs.

MONAURAL OUTPUT

Provides an auxiliary monaural output to drive a standby transmitter. Separate rear panel Output Level Control (-20 dBm to +18 dBm) and internal Tilt Correct Control included.

FREQUENCY RESPONSE

(0 dB ref. at 400 Hz, +10dBm input/output)

9.5 kHz FILTER: 50 Hz to 8 kHz; +0/-1.5 dB -3 dB at 9.5 kHz, > 30 dB atten. at 10.5 kHz, > 40 dB atten. at 11.0 kHz. Conforms to NRSC-1 standard using required dynamic measurement method

11 kHz FILTER: 50 Hz to 10 kHz; +0/-1.5 dB -3 dB at 11 kHz, > 30 dB atten. at 13.5 kHz

PROOF MODE: 50 Hz to 15 kHz, +.0/-1.0 dB

HARMONIC DISTORTION

(+10 dBm input/output, 20 kHz bandwidth)

9.5 or 11 kHz BW: < 0.25% over selected operating bandwidth at or below 100% negative modulation level

PROOF MODE: < 0.1%

S+N/N (+10 dBm input/output, 20 kHz bandwidth)

> 60 dB in operate mode, > 65 dB in proof mode

STEREO SEPARATION and CROSSTALK

OPERATE MODE: > 25 dB over selected operating bandwidth

PROOF MODE: > 40 dB

INPUT COMPRESSION

Input leveling dual band AGC. Range is internally selectable in 3 dB increments, 0dB to 15dB. Overall range > 25dB. Gating internally selectable for -10 dB or -20 dB. Dual band crossover frequency is 340 Hz. Attack times are program dependent. Release times for Low, High and Wide bands are internally selectable (Slow, Med or Fast).

STEREO ENHANCE

Internally selectable amount of enhancement and threshold level

LOW FREQUENCY ENHANCE

Adjustable boost from 0 to +5 dB via front adjustment. Band center at 100 Hz.

MID RANGE PRESENCE

Adjustable boost from 0 to +5 dB via front adjustment. Band center at 2 kHz.

HIGH FREQUENCY EQUALIZATION

Adjustable boost from 0 to over +10 dB at 10 kHz via front panel adjustment. A detente position at 12 o'clock is calibrated for NRSC-1 standard pre-emphasis.

LIMITING

Adjustable from 0 dB to +5 dB via front panel adjustment. Control adjusts drive level into a 3 band limiter. Limiter crossover frequencies are 1 kHz and 4 kHz.

ASYMMETRY

Adjusts positive peak modulation from 95% to +140% via front panel adjustment

TILT CORRECT

Adjusts phase shift correction for pre-1980 transmitters (plate modulated) via front panel control. For solid state and PWM type transmitters, an OFF position defeats the correction.

L-R LEVEL

Adjustable from -6 dB to +3dB via front panel adjustment. Used to adjust stereo channel balance, or to reduce the amount of transmitted stereo information.

L-R BANDWIDTH

Internally selectable 4th order low pass filter to reduce L-R (stereo) bandwidth to 4.5 kHz. A companion all pass filter is selectable in the L+R path to maintain channel separation specifications. This feature is very useful for stations that have a narrow band directional antenna system.

SINGLE CHANNEL LIMITER

Adjustable from -60% to -80% via front panel adjustment. Used to prevent more than -70% envelope modulation produced by a single channel (required by Motorola C-QUAM® System).

MODE SWITCH

Rear panel switch selects Operate, Proof, Reverse, and Left Only for test and set up.

BANDWIDTH SWITCH

Rear panel switch selects either a 9.5 kHz (NRSC) or 11 kHz bandwidth.

GENERAL SPECIFICATIONS

POWER REQUIREMENTS: 100-130 or 200-250 VAC, 48-440 Hz, 25 VA maximum. EMI suppressed, IEC connector standard.

OPERATING TEMPERATURE RANGE: 0 to 50 degrees C (32- 122 degrees F).

OPERATING HUMIDITY: 0 to 95% relative humidity, non-condensing.

OPERATING ALTITUDE: 0 to 4,572 meters (0-15,000 feet) AMSL

DIMENSIONS: 48.3 cm W, 4.5 cm H, 40.6 cm D (19" x 1.75" x 16") including protruding controls and connectors.

SHIPPING WEIGHT: 8.2 kg (18 lbs) including standard accessories.

C-QUAM® is a registered Trademark of Motorola, Inc.

Amigo AM Installation

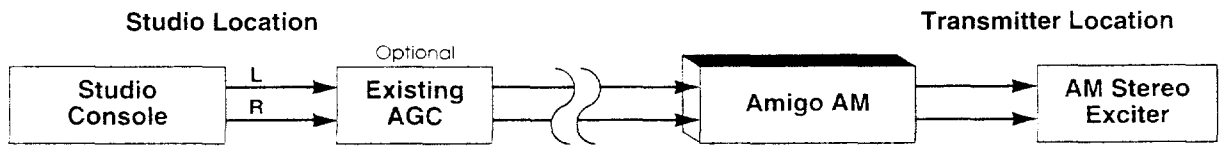

Looking for Low Cost & Powerful FM Processing?

Meet our FM1-G System

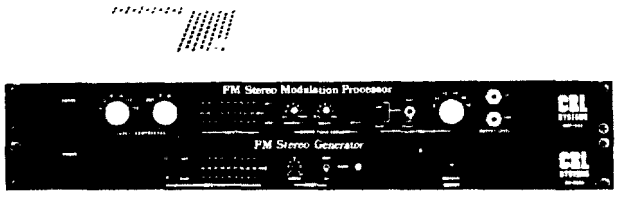

SMP-850 and SG-800A

- Easy Installation & Operation
- Two-Band Input Compressor
- Stereo Sound Field Enhancer
- Clip or Limit Priority Limiting
- Absolute Modulation Control
- Digitally Synthesized Generator
- Laboratory Grade Stereo Signal

SIMPLE

The FM1-G Audio Processing System provides everything needed to produce both loud and incredibly clear FM stereo sound.

While the FM1-G system is CRL's most basic system, it is extremely powerful and is both competitive and capable. Just add it after your audio console and before your high quality FM exciter and you will achieve a state of the art FM broadcast signal.

The FM1-G system consists of two units, our SMP-850 Stereo Modulation Processor and our SG-800A, digitally synthesized Stereo Generator.

POWERFUL

Our SMP-850 contains a dual-band input AGC/Compressor which can provide up to 20 db of automatic level control. A special CRL stereo sound field enhancer provides dramatic improvements in "ON-AIR" stereo separation and loudness if desired. Control of FM peak modulation is provided by a special Transfer Function™ limiting system invented by CRL to provide maximum quality, loudness and absolute control.

The SG-800A Stereo Generator produces a laboratory quality FM stereo composite signal by using a special digitally synthesized "balanced modulator". This modulator provides ROCK SOLID stability and maintenance free composite and pilot accuracy because of its digital creation. It is rated as BEST in the INDUSTRY by those who use it.

MODULAR

While simple and powerful, the FM1-G is also EXPANDABLE because it is modular. You can upgrade to CRL's most powerful FM2-G+ system by just adding our SGC-800 Stereo AGC/Noise Reduction unit and later our SEC-800 Spectral Energy Compressor unit. That's why you can't beat the FM1-G from CRL.

FM1-G INSTALLATIONS

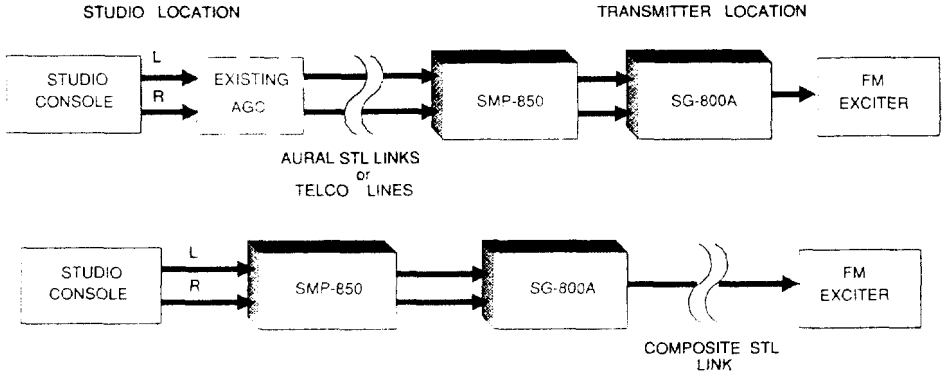

SMP-850 Stereo Modulation Processor

INPUT (Reference 0 dBm = 0.775 VRMS)
TYPE: Active balanced (differential)
IMPEDANCE: > 10 k ohms balanced bridging
TERMINATION: 600 ohms (selectable)
LEVEL (adjustable): < - 10 dBm TO +20 dBm
(Referenced to 0 dB indication on front panel level meter)

OUTPUT
TYPE: Active balanced (differential)
IMPEDANCE: 100 ohms (designed to drive 600 ohm load)
LEVEL:
(Referenced to 100% modulation level as established internally)
Adjustable: < - 20 dBm TO +20 dBm
Fixed: +16 dBm for connection to SG-800A stereo generator

FREQUENCY RESPONSE
(Referenced at 20 dB below G/R, 400 Hz, +10 dBm in/out)
OPERATE MODE: 50 Hz to 15 kHz; +/- 1 dB
PROOF MODE: 50 Hz to 15 kHz; +/- .5 dB

HARMONIC DISTORTION
(+10 dBm input/output, 20 kHz bandwidth)
OPERATE MODE: < 0.25%, 50 Hz - 15 kHz (< 0.15% typical)
PROOF MODE: < 0.1%, 50 Hz - 15 kHz

S + N/N
(Ref to 5 kHz, level at threshold of G/R (80% mod.) 30 kHz bandwidth)
OPERATE MODE: > 80 dB, de-emphasized
PROOF MODE: > 85 dB, de-emphasized

STEREO SEPARATION (Unde-emphasized, worst case)
OPERATE MODE: > 60 dB, 50 Hz - 1 kHz
> 50 dB, 1 kHz - 10 kHz
PROOF MODE: > 70 dB, 50 Hz - 15 kHz

CROSSTALK
OPERATE MODE: > 35 dB min, > 45 dB typical, 50 Hz - 15 kHz
PROOF MODE: > 55 dB, 50 Hz - 15 kHz

INPUT COMPRESSION
Input leveling G/R; selectable in 3 dB increments to 15 dB
> 25 dB overall range

LIMITING
Selectable in 1 dB increments from 0 to +5 dB

TIME CONSTANTS
Program dependent

STEREO ENHANCE
Threshold: Adjustable from 3 dB of program separation to off
Enhance: Adjustable for 6 to 26 dB of enhancement (pgm controlled)

MODE SWITCH
Selects operate or proof mode (located on rear panel)

FRONT PANEL INDICATORS
Dual 10 - Segment LED type input level meters with 22 dB
(28 dB with OVLD) dynamic range
Sound field enhance activity indicator
Left & Right channel limiting activity indicators

Circuit Research Labs, Inc.
2522 W. Geneva Drive
Tempe, Arizona 85282 U.S.A.
Tel: 602-438-0888
800-535-7648
Fax: 602-438-8227
Telex: 350464

SG-800A Stereo Generator

INPUT (Reference 0 dBm = 0.775 VRMS)
TYPE: Active balanced (differential)
IMPEDANCE: 10 k ohms balance bridging
10 k ohms unbalanced
TERMINATION: 600 ohms (selectable)
LEVEL: +10 dBm TO +20 dBm

SCA INPUTS (Dual)
TYPE: Unbalanced (BNC connector)
IMPEDANCE: 10 k ohms

SCA INPUT/COMPOSITE OUTPUT GAIN: Unity

COMPOSITE OUTPUT
IMPEDANCE: 50 ohms (unbalanced)
LEVEL:.25 volts to 5 volts p-p, adjustable into 50 ohms,
.25 volts to 9 volts into open circuit

AUDIO FREQUENCY RESPONSE
(Ref. 0 dB @ 400 Hz, +10 dBm input)
20 Hz to 15 kHz, +/- 0.5 dB

TOTAL HARMONIC DISTORTION
(+10 dBm input level, 15 kHz bandwidth, stereo)
< 0.03%

INTERMODULATION DISTORTION
(+10 dBm input level, 15 kHz bandwidth, stereo)
< 0.03%, 60 Hz/7 kHz; 4:1 Ratio.

S+N/N
> 80 dB - below 100 % modulation @ 400 Hz, 75 uSec de-emphasis

LINEAR CROSSTALK AND STEREO SEPARATION

L to R, R to L	> 55 dB, 20 Hz to 15 kHz (60 dB typical)
	> 60 dB, 20 Hz to 10 kHz (65 dB typical)
L+R (Main) to L-R (Sub)	> 55 dB, 20 Hz to 15 kHz (60 dB typical)
L-R (Sub) to L+R (Main)	> 55 dB, 20 Hz to 15 kHz (60 dB typical)

NON-LINEAR CROSSTALK

L+R (Main) to L-R (Sub)	> 60 dB, 20 Hz to 15 kHz (70 dB typical)
L-R (Sub) to L+R (Main)	> 60 dB, 20 Hz to 15 kHz (70 dB typical)

DYNAMIC STEREO SEPARATION
> 60 dB; 20 Hz to 15 kHz

PILOT FREQUENCY STABILITY
+/- 1 Hz, 32 TO +122 degrees F.

PILOT PHASE
Digitally locked (no adjustment needed)

DYNAMIC PILOT PROTECTION
> 60 dB; measured in a 500 Hz bandwidth centered at 19 kHz

38 kHz SUPPRESSION
> 65 dB

SPURIOUS EMISSION SUPPRESSION
> 65 dB above 53 kHz

PRE-EMPHASIS (located in SMP-850)
Flat, 50, or 75 microseconds)

LOW PASS FILTER (located in SMP-850)
Frequency Response (0 dB ref. at 400 Hz, +10 dBm input)
20 Hz to 15 kHz, +0.5/-1.0 dB

Dynamic Crosstalk Protection
> 55 dB (60 dB typical)

Audio Overshoot
less than 5% (.3 dB) maximum

A Powerful AND Simple FM Processing System?

Meet our FM2-G System

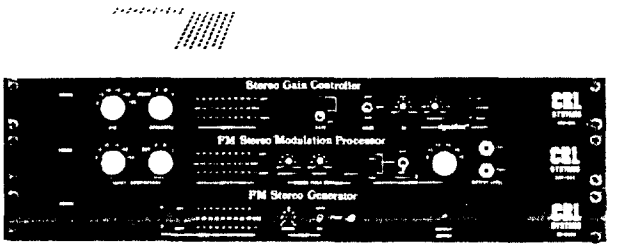

SGC-800, SMP-850 and SG-800A

- Dual/Wide AGC/Compressor
- Dynafex® Noise Reduction
- Stereo Sound Field Enhancer
- Clip or Limit Priority Limiting
- Absolute Modulation Control
- Digitally Synthesized Generator
- Superb Subchannel Protection

COMPETITIVE

Our FM2-G Audio Processing System can produce an "ON-AIR" sound ranging from total high fidelity and quality all the way to a highly competitive, loud and CUSTOMIZED FM stereo sound.

This system is most popular because of its price to performance ratio and because it is extremely competitive and powerful yet simple to operate. Install it between your audio console and your high quality FM exciter to achieve a state of the art FM broadcast signal.

Three units make up this system, our SGC-800 Stereo Gain Controller, SMP-850 Stereo Modulation Processor and our SG-800A digitally synthesized Stereo Generator.

POWERFUL

Our SGC-800 contains a programmable "dual, wide or both" mode AGC/Compressor which can work as multi-band, wide-band or a combination of both. Using CRL's patented Dynafex® Noise Reduction System can provide amazing quieting of noisy program sources.

The SMP-850 limiter provides a special CRL stereo sound field enhancer which allows dramatic improvements in "ON-AIR" stereo separation and loudness. Control of FM peak modulation is provided by its special Transfer Function™ limiting system invented by CRL to provide maximum quality, loudness and absolute control.

Our SG-800A stereo generator produces a ROCK SOLID laboratory grade FM stereo composite signal by using a special digitally synthesized "balanced modulator". This unit provides absolute stability and maintenance free composite/pilot synchronization because of its digital design.

EXPANDABLE

While very powerful, the FM2-G can be still further EXPANDED. At any time, you can upgrade to CRL's most powerful FM2-G+ analog system by just adding our SEC-800 Spectral Energy Compressor and dynamic equalizer unit.

FM2-G INSTALLATIONS

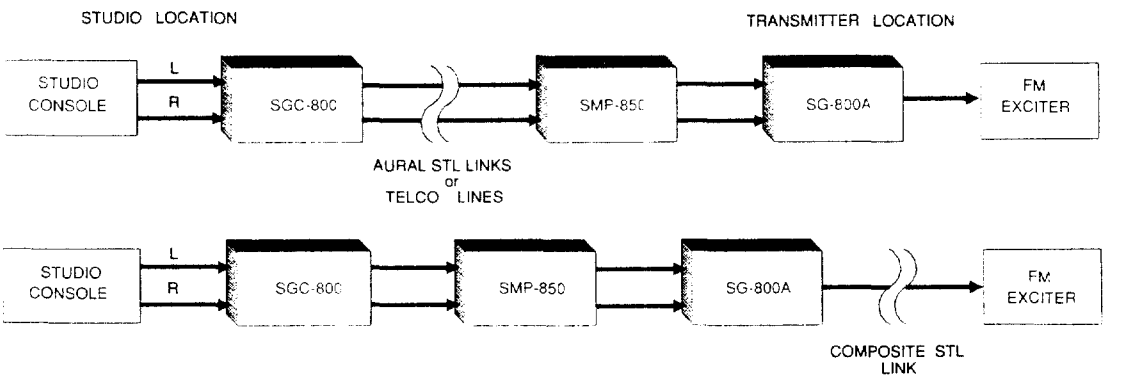

SGC-800 Stereo Gain Controller

Dynafex® N/R out, EQ set Flat unless specified

INPUT (Reference 0 dBm = 0.775 VRMS)
TYPE: Active balanced (differential)
IMPEDANCE: > 10 k ohms balanced bridging
TERMINATION: 600 ohms (selectable)
LEVEL (adjustable): < -30 TO +20 dBm
(Referenced to 0 dB indication on front panel level meter)

OUTPUT
TYPE: Active balanced (differential)
IMPEDANCE: < 200 ohms balanced (for 600 ohm loads)
LEVEL: Selectable in steps: -10,0,+4,+8,+10 dBm

FREQUENCY RESPONSE
(Referenced at 9 dB G/R, BAND switch in BOTH, +10 dBm output)
OPERATE MODE: 50 Hz to 20 kHz; +/- 0.5 dB
PROOF MODE: 50 Hz to 20 kHz; +/- 0.25 dB

HARMONIC DISTORTION
(Referenced at 9 dB G/R, BAND switch in BOTH, +10 dBm output)
OPERATE MODE: < 0.25%, 50 Hz - 20 kHz (< 0.15% typical)
PROOF MODE: < 0.1%, 50 Hz - 20 kHz

IM DISTORTION
(Ref at 9 dB G/R, BAND switch in BOTH, SMPTE 4:1 ratio method)
OPERATE MODE: < 0.25% (< 0.15% typical)
PROOF MODE: < 0.05%

S+N/N
(Ref at G/R threshold, BAND switch in BOTH, +10 dBm output)
OPERATE MODE: > 70 dB (> 72 dB typical)
OPERATE MODE: > 80 dB (with dynafex N/R at -25 dB)
PROOF MODE: > 80 dB

STEREO SEPARATION
(Ref at 9 dB G/R, BAND switch in BOTH, 50 Hz to 20 kHz)
OPERATE MODE: > 50 dB (55 dB typical)
PROOF MODE: > 60 dB

STEREO TRACKING
Each channel of wideband AGC within 1 dB of control channel over 30 dB G/R range

GAIN REDUCTION RANGE
> 30 dB, 50 Hz to 20 kHz

COMPRESSION RATIO
20:1 typical above 9 dB G/R

TIME CONSTANTS
Program dependent attack and switchable release action (slow, Medium, Fast)

GAIN REDUCTION METHOD
Two independent linearized bands of gain reduction riding on a wideband AGC platform, BAND switch allows individual selection of WIDEband only, MULTIband only or BOTH

CROSSOVER FREQUENCY
340 Hz, DUAL and BOTH operating modes

GAIN REDUCTION ELEMENTS
Voltage controlled resistor (patented by CRL)

GATE FUNCTION
Locks gain reduction at 20 dB below G/R threshold to prevent noise pumping. Internal adjust (-30 to -10 dB)

NOISE GENERATOR
Pulsed or Static USASI weighted (jumper selectable)

FRONT PANEL INDICATORS
Dual 10 Segment LED relative input level meters with 22 dB, (28 dB with OVLD) dynamic range

SMP-850 Stereo Modulation Processor

INPUT (Reference 0 dBm = 0.775 VRMS)
TYPE: Active balanced (differential)
IMPEDANCE: > 10 k ohms balanced bridging
TERMINATION: 600 ohms (selectable)
LEVEL (adjustable): < - 10 dBm TO +20 dBm
(Referenced to 0 dB indication on front panel level meter)

OUTPUT
TYPE: Active balanced (differential)
IMPEDANCE: 100 ohms (designed to drive 600 ohm load)
LEVEL:
(Referenced to 100% modulation level as established internally)
Adjustable: < - 20 dBm TO +20 dBm
Fixed: +16 dBm for connection to SG-800A stereo generator

FREQUENCY RESPONSE
(Referenced at 20 dB below G/R, 400 Hz, +10 dBm in/out)
OPERATE MODE: 50 Hz to 15 kHz; +/- 1 dB
PROOF MODE: 50 Hz to 15 kHz; +/- .5 dB

HARMONIC DISTORTION
(+10 dBm input/output, 20 kHz bandwidth)
OPERATE MODE: < 0.25%, 50 Hz - 15 kHz (< 0.15% typical)
PROOF MODE: < 0.1%, 50 Hz - 15 kHz

S + N/N
(Ref to 5 kHz, level at threshold of G/R (80% mod.) 30 kHz bandwidth)
OPERATE MODE: > 80 dB, de-emphasized
PROOF MODE: > 85 dB, de-emphasized

STEREO SEPARATION (Unde-emphasized, worst case)
OPERATE MODE: > 60 dB, 50 Hz - 1 kHz
> 50 dB, 1 kHz - 10 kHz
PROOF MODE: > 70 dB, 50 Hz - 15 kHz

CROSSTALK
OPERATE MODE: > 35 dB min, > 45 dB typical, 50 Hz - 15 kHz
PROOF MODE: > 55 dB, 50 Hz - 15 kHz

INPUT COMPRESSION
Input leveling G/R; selectable in 3 dB increments to 15 dB
> 25 dB overall range

LIMITING
Selectable in 1 dB increments from 0 to +5 dB

TIME CONSTANTS
Program dependent

STEREO ENHANCE
Threshold: Adjustable from 3 dB of program separation to off
Enhance: Adjustable for 6 to 26 dB of enhancement (pgm controlled)

MODE SWITCH
Selects operate or proof mode (located on rear panel)

FRONT PANEL INDICATORS
Dual 10 - Segment LED type input level meters with 22 dB (28 dB with OVLD) dynamic range
Sound field enhance activity indicator
Left & Right channel limiting activity indicators

SG-800A Stereo Generator

INPUT (Reference 0 dBm = 0.775 VRMS)
TYPE: Active balanced (differential)
IMPEDANCE: 10 k ohms balance bridging
TERMINATION: 600 ohms (selectable)
LEVEL: +10 dBm TO +20 dBm

SCA INPUTS (Dual)
TYPE: Unbalanced (BNC connector)
IMPEDANCE: 10 k ohms
SCA INPUT/COMPOSITE OUTPUT GAIN: Unity

COMPOSITE OUTPUT
IMPEDANCE: 50 ohms (unbalanced)
LEVEL: .25 volts to 5 volts p-p, adjustable into 50 ohms,
.25 volts to 9 volts into open circuit

AUDIO FREQUENCY RESPONSE
(Ref. 0 dB @ 400 Hz, +10 dBm input)
20 Hz to 15 kHz, +/- 0.5 dB

TOTAL HARMONIC DISTORTION
(+10 dBm input level, 15 kHz bandwidth, stereo)
< 0.03%

INTERMODULATION DISTORTION
(+10 dBm input level, 15 kHz bandwidth, stereo)
< 0.03%, 60 Hz/7 kHz; 4:1 Ratio.

S+N/N
> 80 dB - below 100 % modulation @ 400 Hz, 75 uSec de-emphasis

LINEAR CROSSTALK AND STEREO SEPARATION

L to R, R to L	> 55 dB, 20 Hz to 15 kHz (60 dB typical)
	> 60 dB, 20 Hz to 10 kHz (65 dB typical)
L+R (Main) to L - R (Sub)	> 55 dB, 20 Hz to 15 kHz (60 dB typical)
L - R (Sub) to L+ R (Main)	> 55 dB, 20 Hz to 15 kHz (60 dB typical)

NON-LINEAR CROSSTALK

L+R (Main) to L - R (Sub)	> 60 dB, 20 Hz to 15 kHz (70 dB typical)
L - R (Sub) to L+ R (Main)	> 60 dB, 20 Hz to 15 kHz (70 dB typical)

DYNAMIC STEREO SEPARATION
> 60 dB; 20 Hz to 15 kHz

PILOT FREQUENCY STABILITY
+/- 1 Hz, 32 TO +122 degrees F.

PILOT PHASE
Digitally locked (no adjustment needed)

DYNAMIC PILOT PROTECTION
> 60 dB; measured in a 500 Hz bandwidth centered at 19 kHz

38 kHz SUPPRESSION
> 65 dB

SPURIOUS EMISSION SUPPRESSION
> 65 dB above 53 kHz

PRE-EMPHASIS (located in SMP-850)
Flat, 50, or 75 microseconds)

LOW PASS FILTER (located in SMP-850)
Frequency Response (0 dB ref. at 400 Hz, +10 dBm input)
20 Hz to 15 kHz, +0.5/-1.0 dB
Audio Overshoot
less than 5% (.3 dB) maximum

Circuit Research Labs, Inc.
2522 W. Geneva Drive
Tempe, Arizona 85282 U.S.A.
Tel: 602-438-0888
800-535-7648
Fax: 602-438-8227
Telex: 350464

Need MAXIMUM Control & Loudness on FM?

Try our FM2-G+ Processing System

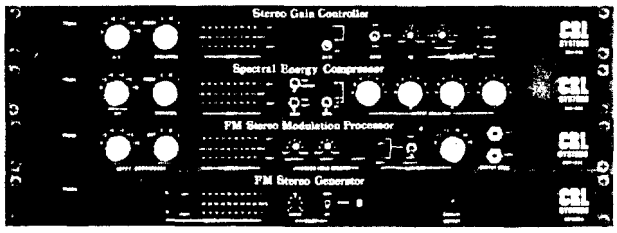

SGC-800, SEC-800, SMP-850 & SG-800A

- Dual/Wide Band or Both AGC
- Dynafex® Noise Reduction
- Four-Band Compressor/Equalizer
- Stereo Sound Field Enhancer
- Clip or Limit Priority Limiting
- Absolute Modulation Control
- Digitally Synthesized Generator

TOTAL CONTROL

Our FM2-G+ Audio Processing System is designed for those who desire maximum loudness and/or sound control. It provides extremely customized "ON-AIR" sound capability which is highly competitive.

We only recommend the FM2-G+ for those who are familiar with audio processing and have the necessary experience to work with total sound control. Stations should have extremely high quality audio sources and transmitting equipment in order to achieve full benefit from this system.

The system includes our SGC-800 Stereo Gain Controller, SEC-800 Spectral Energy Compressor, SMP-850 Stereo Modulation Processor and SG-800A, digitally synthesized Stereo Generator.

MAXIMUM POWER

Our SGC-800 first unit contains a programmable "dual, wide or both" mode AGC/Compressor that can work as multi-band, wide-band or a combination of both. Using CRL's patented Dynafex® Noise Reduction System can provide amazing quieting of noisy program tape sources.

The SEC-800 unit provides 4 bands of compression or dynamic equalization. Audio is split at 100 Hz, 700 Hz and 4.5 kHz to provide independent control of bass, lower and upper midrange, and highs. This unit features selectable compress or limit modes to control "impact" sounds and multi or wide-band modes to enable/disable dynamic equalization.

Our SMP-850 limiter includes a special CRL stereo sound field enhancer which allows dramatic improvements in "ON-AIR" stereo separation and loudness. Control of FM peak modulation is provided by its special Transfer Function™ limiting system invented by CRL to provide maximum quality, loudness and absolute control.

The SG-800A stereo generator produces laboratory grade FM stereo composite signals by using a special digitally synthesized "balanced modulator". This unit provides absolute stability and maintenance free composite/pilot synchronization because of its digital design.

FM2-G+ INSTALLATIONS

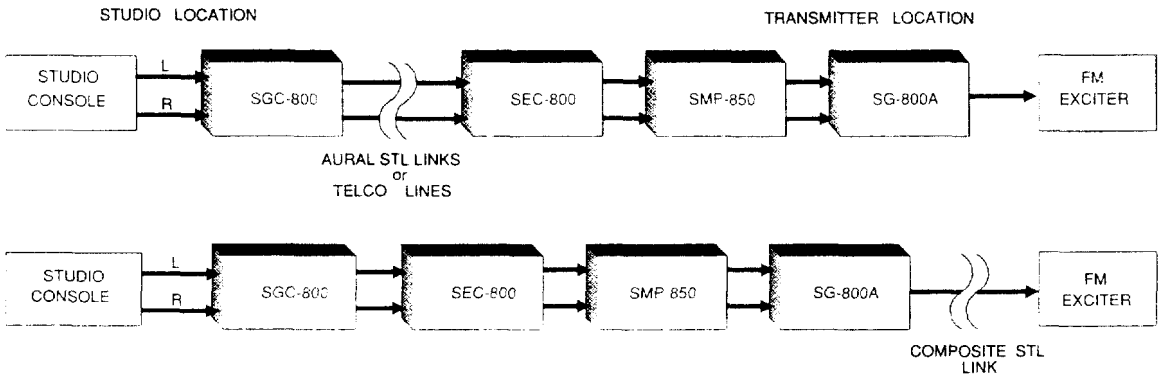

SGC-800 Stereo Gain Controller

Dynatex* N/R out, EQ set Flat unless specified
INPUT (Reference 0 dBm = 0.775 VRMS)
TYPE: Active balanced (differential)
IMPEDANCE: > 10 k ohms balanced bridging
TERMINATION: 600 ohms (selectable)
LEVEL (adjustable): < -30 TO +20 dBm
(Referenced to 0 dB indication on front panel level meter)
OUTPUT
TYPE: Active balanced (differential)
IMPEDANCE: < 200 ohms balanced (for 600 ohm loads)
LEVEL: Selectable in steps: -10,0,+4,+8,+10 dBm
FREQUENCY RESPONSE
(Referenced at 9 dB G/R, BAND switch in BOTH, +10 dBm output)
OPERATE MODE: 50 Hz to 20 kHz; +/- 0.5 dB
PROOF MODE: 50 Hz to 20 kHz; +/- 0.25 dB
HARMONIC DISTORTION
(Referenced at 9 dB G/R, BAND switch in BOTH, +10 dBm output)
OPERATE MODE: < 0.25%, 50 Hz - 20 kHz (< 0.15% typical)
PROOF MODE: < 0.1%, 50 Hz - 20 kHz
IM DISTORTION
(Ref at 9 dB G/R, BAND switch in BOTH, SMPTE 4:1 ratio method)
OPERATE MODE: < 0.25% (< 0.15% typical)
PROOF MODE: < 0.05%
S+N/N
(Ref at G/R threshold, BAND switch in BOTH, +10 dBm output)
OPERATE MODE: > 70 dB (> 72 dB typical)
OPERATE MODE: > 80 dB (with dynatex N/R at -25 dB)
PROOF MODE: > 80 dB
STEREO SEPARATION
(Ref at 9 dB G/R, BAND switch in BOTH, 50 Hz to 20 kHz)
OPERATE MODE: > 50 dB (55 dB typical)
PROOF MODE: > 60 dB
STEREO TRACKING
Each channel of wideband AGC within 1 dB of control channel over 30 dB G/R range
GAIN REDUCTION RANGE
>30 dB, 50 Hz to 20 kHz
COMPRESSION RATIO
20:1 typical above 9 dB G/R
TIME CONSTANTS
Program dependent attack and switchable release action (slow, Medium, Fast)
GAIN REDUCTION METHOD
Two independent linearized bands of gain reduction riding on a wideband AGC platform, BAND switch allows individual selection of WIDEband only, MULTIband only or BOTH
CROSSOVER FREQUENCY
340 Hz, DUAL and BOTH operating modes
GAIN REDUCTION ELEMENTS
Voltage controlled resistor (patented by CRL)
GATE FUNCTION
Locks gain reduction at 20 dB below G/R threshold to prevent noise pumping. Internal adjust (-30 to -10 dB)
NOISE GENERATOR
Pulsed or Static USASI weighted (jumper selectable)
FRONT PANEL INDICATORS
Dual 10 Segment LED relative input level meters with 22 dB, (28 dB with OVLD) dynamic range

SEC-800 Spectral Energy Compressor

INPUT (Reference 0 dBm = 0.775 VRMS)
TYPE: Active balanced (differential)
IMPEDANCE: > 10 k ohms balanced bridging
TERMINATION: 600 ohms (selectable)
LEVEL (adjustable): < -30 dBm TO +20 dBm
(Referenced to input G/R threshold)
OUTPUT
TYPE: Active balanced (differential)
IMPEDANCE: < 200 ohms balanced (for 600 ohm loads)
LEVEL (maximum): +18 dBm into 600 ohms @400 Hz
FREQUENCY RESPONSE
(Ref at 9 dB G/R, BAND switch in MULTI, +4 dBm output)
OPERATE MODE: 100 Hz to 15 kHz, +/- 1 dB
PROOF MODE: 50 Hz to 15 kHz, +.1 to -.06 dB
HARMONIC DISTORTION
(Ref at 9 dB G/R, BAND switch in MULTI, +4 dBm output)
OPERATE MODE: < 0.6%, 100 Hz - 15 kHz (< 0.25% typical)
PROOF MODE: < 0.25%, 100 Hz - 15 kHz
IM DISTORTION
(Ref at G/R threshold, BAND switch in MULTI, SMPTE 4:1 ratio)
OPERATE MODE: < 0.35%, (< 0.3% typical)
PROOF MODE: < 0.08%
S+N/N
(Ref at G/R threshold, BAND switch in MULTI, +10 dBm output)
OPERATE MODE: > 70 dB, (> 75 dB typical)
PROOF MODE: > 75 dB
GAIN REDUCTION RANGE
>30 dB, 50 Hz to 15 kHz
STEREO SEPARATION
(Ref at 9 dB G/R, BAND switch in MULTI, 50 Hz to 10 kHz)
OPERATE MODE: > 45 dB, (> 50 dB typical)
PROOF MODE: > 55 dB
STEREO TRACKING
Each channel of wideband AGC within 0.2 dB of control channel over 30 dB G/R range
TIME CONSTANTS
Program dependent attack and switch selectable release action (Slow, Medium, Fast)

Circuit Research Labs, Inc.
2522 W. Geneva Drive
Tempe, Arizona 85282 U.S.A.
Tel: 602-438-0888
800-535-7648
Fax: 602-438-8227
Telex: 350464

GAIN REDUCTION METHOD
4 band VCR alignment free design & 4 output control VCA's. BAND switch allows selection of WIDEband or MULTIband
CROSSOVER FREQUENCY
200 Hz, 1 kHz, and 5 kHz with 6 dB/octave filters
GAIN REDUCTION ELEMENTS
Voltage controlled resistor (patented by CRL)
GATE FUNCTION
Locks gain reduction at 10 or 20 dB below G/R threshold (switchable) to prevent amplification of noise floor.
FRONT PANEL INDICATORS
Dual 10 Segment LED relative input level meters with 22 dB, (28 dB with OVLD) dynamic range

SMP-850 Stereo Modulation Processor

INPUT (Reference 0 dBm = 0.775 VRMS)
TYPE: Active balanced (differential)
IMPEDANCE: > 10 k ohms balanced bridging
TERMINATION: 600 ohms (selectable)
LEVEL (adjustable): < - 10 dBm TO +20 dBm
(Referenced to 0 dB indication on front panel level meter)
OUTPUT
TYPE: Active balanced (differential)
IMPEDANCE: 100 ohms (for 600 ohm loads)
LEVEL:
(Referenced to 100% modulation level as established internally)
Adjustable: < - 20 dBm TO +20 dBm
Fixed: +16 dBm for connection to SG-800A stereo generator
FREQUENCY RESPONSE
(Referenced at 20 dB below G/R, 400 Hz, +10 dBm in/out)
OPERATE MODE: 50 Hz to 15 kHz; +/- 1 dB
PROOF MODE: 50 Hz to 15 kHz; +/- .5 dB
HARMONIC DISTORTION
(+10 dBm input/output, 20 kHz bandwidth)
OPERATE MODE: < 0.25%, 50 Hz - 15 kHz (< 0.15% typical)
PROOF MODE: < 0.1%, 50 Hz - 15 kHz
S + N/N
(Ref to 5 kHz, level at threshold of G/R (80% mod.) 30 kHz bandwidth)
OPERATE MODE: > 80 dB, de-emphasized
PROOF MODE: > 85 dB, de-emphasized
STEREO SEPARATION (Unde-emphasized, worst case)
OPERATE MODE: > 60 dB, 50 Hz - 1 kHz
> 50 dB, 1 kHz - 10 kHz
PROOF MODE: > 70 dB, 50 Hz - 15 kHz
CROSSTALK
OPERATE MODE: > 35 dB min, > 45 dB typical, 50 Hz - 15 kHz
PROOF MODE: > 55 dB, 50 Hz - 15 kHz
INPUT COMPRESSION
Input leveling G/R, selectable in 3 dB increments to 15 dB
> 25 dB overall range
LIMITING
Selectable in 1 dB increments from 0 to +5 dB
TIME CONSTANTS
Program dependent
STEREO ENHANCE
Threshold: Adjustable from 3 dB of program separation to off
Enhance: Adjustable for 6 to 26 dB of enhancement (pgm controlled)
MODE SWITCH
Selects operate or proof mode (located on rear panel)
FRONT PANEL INDICATORS
Dual 10 - Segment LED type input level meters with 22 dB (26 dB with OVLD) dynamic range
Sound field enhance activity indicator
Left & Right channel limiting activity indicators

SG-800A Stereo Generator

INPUT (Reference 0 dBm = 0.775 VRMS)
TYPE: Active balanced (differential)
IMPEDANCE: 10 k ohms balance bridging
10 k ohms unbalanced
TERMINATION: 600 ohms (selectable)
LEVEL: +10 dBm TO +20 dBm
SCA INPUTS (Dual)
TYPE: Unbalanced (BNC connector)
IMPEDANCE: 10 k ohms
SCA INPUT/COMPOSITE OUTPUT GAIN: Unity
COMPOSITE OUTPUT
IMPEDANCE: 50 ohms (unbalanced)
LEVEL: .25 volts to 5 volts p-p, adjustable into 50 ohms, .25 volts to 9 volts into open circuit
AUDIO FREQUENCY RESPONSE
(Ref. 0 dB @ 400 Hz, +10 dBm input)
20 Hz to 15 kHz, +/- 0.5 dB
TOTAL HARMONIC DISTORTION
(+10 dBm input level, 15 kHz bandwidth, stereo)
< 0.03%
INTERMODULATION DISTORTION
(+10 dBm input level, 15 kHz bandwidth, stereo)
< 0.03%, 60 Hz/7 kHz; 4:1 Ratio.
S+N/N
> 80 dB - below 100 % modulation @ 400 Hz, 75 uSec de-emphasis
LINEAR CROSSTALK AND STEREO SEPARATION
L to R, R to L > 55 dB, 20 Hz to 15 kHz (60 dB typical)
> 60 dB, 20 Hz to 10 kHz (65 dB typical)
L+R (Main) to L-R (Sub) > 55 dB, 20 Hz to 15 kHz (60 dB typical)
L-R (Sub) to L+R (Main) > 55 dB, 20 Hz to 15 kHz (60 dB typical)
NON-LINEAR CROSSTALK
L+R (Main) to L-R (Sub) > 60 dB, 20 Hz to 15 kHz (70 dB typical)
L-R (Sub) to L+R (Main) > 60 dB, 20 Hz to 15 kHz (70 dB typical)
DYNAMIC STEREO SEPARATION
> 60 dB; 20 Hz to 15 kHz
PILOT FREQUENCY STABILITY
+/- 1 Hz, 32 TO +122 degrees F.
PILOT PHASE
Digitally locked (no adjustment needed)
DYNAMIC PILOT PROTECTION
> 60 dB; measured in a 500 Hz bandwidth centered at 19 kHz
38 kHz SUPPRESSION
> 65 dB
SPURIOUS EMISSION SUPPRESSION
> 65 dB above 53 kHz
PRE-EMPHASIS (located in SMP-850)
Flat, 50, or 75 microseconds)
LOW PASS FILTER (located in SMP-850)
Frequency Response (0 dB ref. at 400 Hz, +10 dBm input)
20 Hz to 15 kHz, +0.5/-1.0 dB
Dynamic Crosstalk Protection
> 55 dB (60 dB typical)
Audio Overshoot
less than 5% (.3 dB) maximum

Your Key to FM On-Air Distinction...

the Signature Series Audio Processing System

from

CRL SYSTEMS®