EX PARTE OR LATE FILED

FEB 17 1995

Building The Wireless Future™

CTIA

Cellular
Telecommunications
Industry Association
1250 Connecticut
Avenue, N.W.
Suite 200
Washington, D.C. 20036
202-785-0081 Telephone
202-785-0721 Fax

February 17, 1994

Mr. William F. Caton
Acting Secretary
Federal Communications Commission
1919 M Street, N.W. - Room 222
Washington, D.C. 20554

DOCKET FILE COPY ORIGINAL

RE: Ex Parte Contact - Docket Nos. 92-237 and 94-54
Number Administration and Equal Access/Interconnection

Dear Mr. Caton:

On Thursday, Feburary 16, 1994, Mr. Brian Fontes, Senior Vice President for Policy and Administration, and Mr. Randall S. Coleman, Vice President for Regulatory Policy and Law, both representing the Cellular Telecommunications Industry Association (CTIA), met with Ms. Ruth Milkman of Chairman Reed Hundt's office. The discussions concerned the proceedings regarding state regulation of CMRS (which have been reflected in separate ex parte filings), and expressed CTIA's positions as previously filed in the above-referenced docket, and in the attached document.

Pursuant to Section 1.1206 of the Commission's Rules, an original and one copy of this letter and the attachments are being filed with your office.

If there are any questions in this regard, please contact the undersigned.

Sincerely,

Robert F. Roche

Attachment

No. of Copies rec'd 0+1
List A B C D E

RECEIVED
FEB 1 7 1995

Building The
Wireless Future™

CTIA

REINVENTING COMPETITION:
The Wireless Paradigm & The Information Age

Table of Contents

Page

Wireless is *The* Model for the Information Age 3

1. *Success of the Wireless Paradigm*:
Competition Produces Declining Prices 3
2. *Success of the Wireless Paradigm*:
Competition Produces Innovation 4
3. *Success of the Wireless Paradigm*:
Competition Begets Competition 6
4. *Success of the Wireless Paradigm*:
Competition Builds New Platforms for Universal Service 8

Yet the Wireless Model is Under Attack (Even for Wireless) 10

1. *Attacking the Wireless Paradigm*:
State Rate Regulation Raises Prices 11
2. *Attacking the Wireless Paradigm*:
Local Regulation Limits Competition 13
3. *Attacking the Wireless Paradigm*:
Local Regulation's Hidden Taxes 15
4. *Attacking the Wireless Paradigm*:
"Unbundled Interconnection" Threatens Investment and Jobs 16
5. *Attacking the Wireless Paradigm*:
Competitors Seek to Use Government to Limit Competition 19
A. What is "Equal" Access? 19
B. How Does "Equal" Access Apply to Wireless Today? 19
C. "Equal" Access is Anticompetitive
in the "Local Service Market" 20
D. "Equal" Access is Anticompetitive
in the "Long Distance Market" 21
E. "Equal" Access Raises Consumers' Bills 23
F. "Equal" Access Relates to Yesterday's Technology 25
G. "Equal" Access is Anti-New Technology and Services 26
H. "Equal" Access Means Huge Regulatory
and Administrative Burdens 27
6. *Attacking the Wireless Paradigm*:
Current Universal Service Funding is Anti-Competitive 30
7. *Attacking the Wireless Paradigm*:
Investment Rules Discourage International Growth 30
8. *Attacking the Wireless Paradigm*:
Numbers Are a Critical Resource Demanding Fair Administration 31

Moving Forward Under the Wireless Paradigm 32

Reinventing Competition: The Wireless Paradigm and the Information Age

The "information highway" has been more of a debater's promise than a deliverable. Yet, while policymakers have been debating how to structure cyberspace, the wireless telecommunications industry has delivered a telecommunications revolution which, in the process, has road-tested the policy model for the information age.

Wireless telecommunications is an American success story because wireless has existed and grown in an environment of *competition in lieu of government intervention.*

As FCC Commissioner (and former Interim Chairman) James H. Quello recently indicated in a letter to Senator Larry Pressler:

> It is important . . . to distinguish between the wired and wireless segments of the telecommunications industry. Given the rapid growth of cellular, paging and other wireless networks and services, more attention than ever is needed to distinguish the competitive wireless industry as severable from the regulation overseeing the monopoly local wired telephone industry. Over the past decade, Congress and the Federal Communications Commission have worked diligently to create a robust, competitive wireless marketplace. It is important to guard against the instinctive application of traditional monopoly-based regulatory-based tools to the wireless marketplace -- a marketplace which has been competitive from its inception and which will grow even more competitive with the introduction of numerous PCS channels in each market.[1]

As Commissioner Quello stressed: "In my 20+ year tenure at the FCC, my colleagues and I have voted to create a competitive wireless telecommunications industry. The goal of competition is to allow the marketplace, rather than government regulation, to determine how best to serve the public. As you begin the historic review of telecommunications, I encourage you to allow the wireless telecommunications industry to remain unshackled by intrusive regulation and free to respond to the marketplace."[2]

---

[1] Letter from Honorable James H. Quello, Commissioner, FCC, to the Honorable Larry Pressler, Chairman, Committee on Commerce, Science and Transportation, January 20, 1995.

[2] *Id.*

Indeed, this new wireless paradigm has produced record growth and investment.

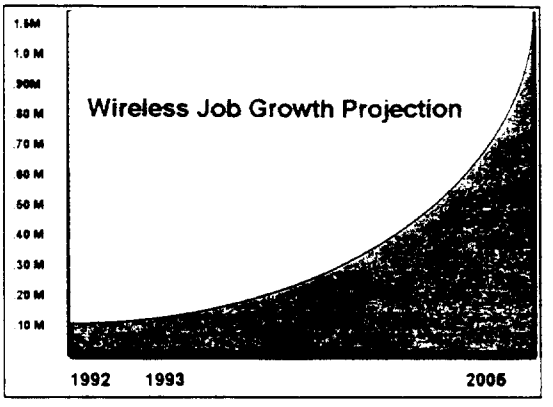

The wireless paradigm of competition in lieu of regulation has resulted in 200,000 new jobs over the past ten years -- **projected to climb to a million new jobs over the next ten years**.[3]

The wireless paradigm of competition in lieu of regulation has resulted in one of the fastest growing consumer electronics products in history -- **climbing to 25 million subscribers in just eleven years**.

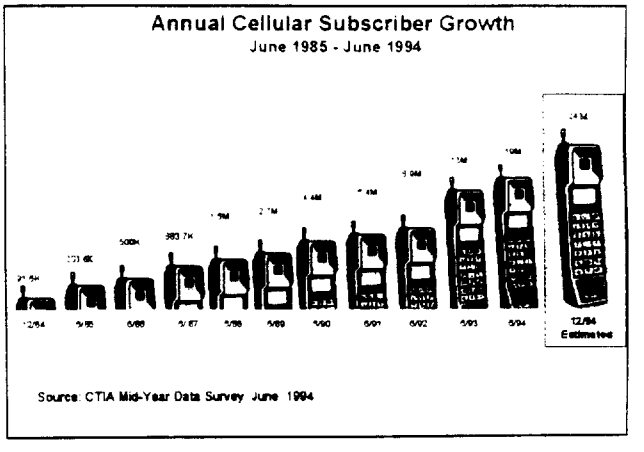

[3]FCC Chairman Reed E. Hundt, November 1, 1994, announcing broadband personal communications service applicants.

Cumulative Capital Investment
June 1985 - June 1994

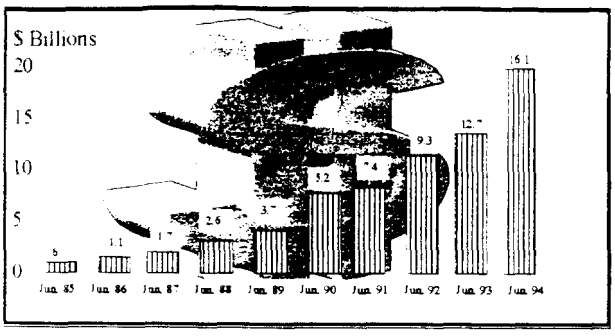

Source: CTIA Mid-Year Data Survey June 1994

The wireless paradigm of competition in lieu of regulation **has resulted in over $16 billion in private capital investment -- projected to rise to over $50 billion in the next ten years.**[4]

Wireless is *The* Model for the Information Age

The telecommunications policy model for the future must be able to generate the kind of growth, investment and expanding services which are typified by the wireless experience. In examples of successful policy illustrated by the preceding charts, the wireless regulatory experience has demonstrated that:

1. *Success of the Wireless Paradigm*: Competition Produces Declining Prices

FCC Chairman Reed Hundt recently observed that monthly cellular rates declined 12 percent in the last year.[5] This continues the trend of declining rates which has marked cellular service throughout its twelve year history.

As the following chart illustrates, in its first 10 years, cellular rates declined 63.8 percent in real terms.

---

[4] *Id.*

[5] Chairman Reed E. Hundt, Speech Before the Personal Communications Industry Association Conference, December 14, 1994, at 2.

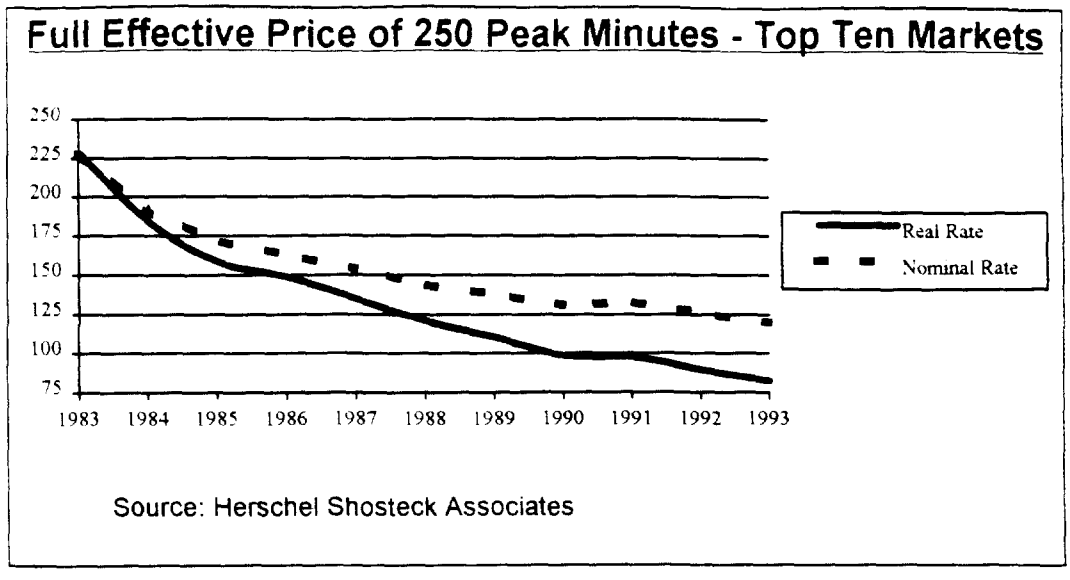

2. *Success of the Wireless Paradigm*: Competition Produces Innovation

Competition creates clear benefits by fostering innovation in wireless services and technologies, creating a dynamic in which manufacturers and service providers work together to meet evolving consumer demands.

As Robert E. Litan, Deputy Assistant Attorney General for Antitrust observed in a speech on October 6, 1994, "**competition must remain as the central governing principle of the information age. Competition will best promote continued innovation. Competition will guarantee consumers the lowest prices for telecommunications and information services. And by securing low prices, competition is an essential means for promoting the availability of these services.**"[6]

The superiority of competitive market forces, combined with a light governmental hand, quickly becomes evident if you compare the record of innovation in wireless services with innovations in other services.

---

[6]Robert E. Litan, "Antitrust Enforcement and the Telecommunications Revolution: Friends, Not Enemies," Speech Before the National Academy of Engineering, October 6, 1994, at 11 (emphasis supplied).

Wireless Innovation	Government Decision-Making
Car → Pocket	HDTV
Mobile → Fixed	VDT
Analog → Digital	AM Stereo
Voice → Voice + Data	Computer III

Over the past twelve years, wireless competition has fostered innovations which have been submitted to consumers for their judgment.

- Evolution from car phones to bag phones to lightweight portable phones.

- Evolution from mobile to fixed services, such as monitoring and control of agricultural activities, as well as basic fixed voice service in areas without wired telephone service.

- Evolution from analog to (multiple) digital technologies, fostering more efficient use of spectrum.

- Evolution from primarily a voice service to a wide variety of other services such as wireless data transmission.

By comparison, government involvement in other technologies has produced delay.

- In 1987, the FCC initiated its High Definition Television (HDTV) docket. Though the FCC has issued many orders and notices on HDTV, no product has yet reached American consumers.[7]

- Since 1987, the ability of telephone companies to deliver video over telephone lines has been the subject of several protracted FCC proceedings. The FCC adopted a decision in 1992 permitting telephone companies to provide "Video Dial Tone" -- transport and gateway functions -- under certain conditions. **However, the "mother may I" nature of the regulatory process has provided competitors with both the**

---

[7] *See Notice of Inquiry*, Docket No. 87-268, *Advanced Television Systems and Their Impact upon the Existing Television Broadcast Service*, 2 FCC Rcd. 5125 (1987); *Tentative Decision and Further Notice of Inquiry*, 3 FCC Rcd. 6520 (1988); *First Report and Order*, 5 FCC Rcd. 5627 (1990); *Second Report and Order*, 7 FCC Rcd. 3340 (1992). *See also* Advisory Committee on Advanced Television Services, *Interim Report* (June 1988), *Second Interim Report* (April 1989), *Third Interim Report* (March 1990), and *Fourth Interim Report* (March 1991).

means and opportunity of delaying the introduction of new technologies and services, thwarting the development of competition and forcing would-be competitors to divert resources to litigation -- resources which could be better put to the consumers' benefit.[8]

- The FCC's back-and-forth decisions regarding a standard for AM stereo also created a great deal of uncertainty on the part of investors, manufacturers, and service providers, hampering investment, innovation, and ultimately, service to consumers.[9]

- Initiated in 1985, the FCC's *Computer III* docket proposed a new, detailed regulatory structure for "enhanced" services, and it is still outstanding ten years later -- it has neither fostered innovation in such services, nor otherwise contributed to consumer welfare.[10]

3. *Success of the Wireless Paradigm*: Competition Begets Competition

The dramatic growth of the wireless business, the accompanying price decreases and technological innovation are the result of a competitive wireless marketplace. In 1981, the FCC took the revolutionary step of creating a competitive market structure for the new service called "cellular." But pro-competitive policy didn't stop in 1981. The FCC changed its rules for other mobile services throughout the 1980s and into the 1990s to encourage additional competition. Legislation passed in 1982 directed the FCC to give providers of Specialized Mobile Radio (SMR) dispatch services

---

[8] *See e.g., Notice of Inquiry*, CC Docket No. 87-266, *Telephone Company-Cable Television Cross-Ownership Rules*, 2 FCC Rcd. 5092 (1987); *Further Notice of Inquiry and Notice of Proposed Rulemaking*, 3 FCC Rcd. 5849 (1988); *Further Notice of Proposed Rulemaking, First Report and Order and Second Further Notice of Inquiry*, 7 FCC Rcd. 300 (1991); *Second Report and Order, Recommendation to Congress, and Second Further Notice of Proposed Rulemaking*, 7 FCC Rcd. 5781 (1992). Both GTE and Bell Atlantic litigated the prohibition on telephone company provision of video programming directly to subscribers in their telephone service areas, which the courts have ruled violate their First Amendment rights. The FCC has therefore recently adopted a *Fourth Further Notice of Proposed Rulemaking* to re-examine the issue. *See* FCC News Release, Report No. DC 95-14, released January 12, 1995.

[9] *See e.g., Report and Order*, Docket No. 21313, 47 Fed. Reg. 13152 (1982) and *Memorandum Opinion and Order*, 3 FCC Rcd. 403 (1988) (declining to adopt an AM standard); *Report and Order*, MM Docket No. 87-267, 6 FCC Rcd. 6273 (1991), *Memorandum Opinion and Order*, MM Docket No. 87-267, 8 FCC Rcd. 3250 (1993) (declining to adopt AM receiver standard); and *Amendment of the Commission's Rules to Establish a Single AM Radio Stereophonic Transmitting Equipment Standard*, ET Docket No. 92-298, 3 FCC Rcd. 688 (*Notice of Proposed Rulemaking*), *Report and Order*, 8 FCC Rcd. 8216 (1993) (adopting an AM standard).

[10] *See e.g., Amendment of Section 64.702 of the Commission's Rules and Regulations, Phase I, Report and Order*, 104 FCC 2d 958 (1986), *recon.* 2 FCC Rcd. 3035 (1987), *further recon.*, 3 FCC Rcd. 1135 (1988), *second further recon.*, 4 FCC Rcd. 5927 (1989), *Phase I Order and Phase I Recon. Order vacated, California v. F.C.C.*, 905 F.2d 1217 (9th Cir. 1990).

an opportunity to interconnect with the public switched telephone network.[11] As a result, dispatch services began evolving to look a lot like cellular service. Since then, even more remarkable changes have occurred in the SMR industry: the FCC allocated more spectrum, encouraged technological innovation, and permitted wide-area SMR operations that transform SMR into "Enhanced SMR" (ESMR), a competitive cellular-like provider.[12]

Additional wireless competition begins this year:

- The FCC has allocated 120 megahertz of spectrum -- 240% of the spectrum available for "cellular" -- to broadband "personal communications services" (PCS). The auction, now underway, will produce up to six new wireless competitors per market.

- The FCC has allocated spectrum to Mobile Satellite Services (MSS), and in the Spring of 1995, American Mobile Satellite Corporation is scheduled to launch its geostationary MSS service -- using satellites to provide service to mobile communications subscribers.

- The FCC has allocated spectrum for "narrowband PCS" services, to provide two-way messaging, advanced paging, and data services.

- On the horizon are Low Earth-Orbiting (LEO) satellite systems, providing more wireless telecommunications competition.

In 1993, Congress further enhanced wireless competition by directing that like wireless services would be regulated alike. This removed the regulatory differences between services, forcing companies to compete in the marketplace rather than before regulators. "Regulatory parity" encouraged further competition by classifying practically all wireless services as "Commercial Mobile Services" and mandating that the federal government and most states forbear from substituting regulatory judgment for the competitive market.[13]

In 1982 and in 1993, Congress got it right. Throughout the 1980s, the FCC got it right. In both instances, policymakers recognized that ***competitive forces and minimal regulations create an environment for the growth of tremendous consumer benefits.*** *In*

---

[11] *Second Report and Order*, Docket No. 20846, 89 F.C.C.2d 741, 752-53 (1982), *recon.* 93 F.C.C.2d 1111 (1983).

[12] *See e.g., Report and Order*, GN Docket No. 84-1233, 2 FCC Rcd. 1825 (1986) (allocation); *see also Fleet Call, Inc.*, 6 FCC Rcd. 1533, *recon. dismissed*, 6 FCC Rcd. 6989 (1991).

[13] *See* Omnibus Budget Reconciliation Act of 1993, Pub. L. No. 103-66, Sec. 6002(b)(2)(A), 107 Stat. 312, 393 (1993). The FCC re-named these services "Commercial Mobile Radio Services" (CMRS) in implementing Congress' directives.

doing so, policymakers developed and tested the new paradigm for telecommunications in the information age.

4. *Success of the Wireless Paradigm*: Competition Builds New Platforms for Universal Services

Competition fosters new platforms for the delivery of universal and ubiquitous services. Competitive wireless services offer multiple paths for connecting with other people -- in rural and urban locations.

For instance, as the Council on Competitiveness observed in its recent report, *Breaking the Barriers to the National Information Infrastructure*, most schools lack telephone lines in classrooms to facilitate educational services drawing upon remote video, audio, image and text information.[14] Wireless technologies are able to bring these resources to such classrooms.

The CTIA Foundation for Wireless Telecommunications and CTIA's members are helping math teachers better educate their students and health care providers better treat their patients. With its MATHLINE project, the CTIA Foundation is providing laptop computers with cellular modems and free air time to bring state-of-the-art mathematics education to schools nationwide.[15] This specific application provides the last critical link between schools and the information superhighway -- a link which would be long in coming if we required a hard-wired on- and off-ramp to that highway.

Providers like Southwestern Bell Mobile Systems are using wireless technology to improve education overall, putting wireless communications to work in a Dallas school district by equipping teachers, administrators and custodians with microcell-based pocket phones on a junior high school campus.

The Dallas experience has been judged a success, as it fills a major void by solving basic communications problems for teachers and administrators alike. Using

The objectives of the SWB Mobile Systems Dallas school project are:

- **to improve the effectiveness of teachers;**
- **to improve the content of the curriculum;**
- **to accelerate the learning of students by creating a telecommunications-rich environment that opens new doors to opportunities and resources and establishes a foundation for life-long learning.**

[14] "Breaking the Barriers to the National Information Infrastructure: A Conference Report by the Council on Competitiveness," December 1994, at 41-42 (reviewing education project demonstrations).

[15] *See e.g.*, "NYNEX Teams Up With Thirteen/WNET to Provide On-Line 'Anytime, Anywhere' Math Education," *Business Wire*, January 10, 1995.

their phones. teachers can summon help to an unruly incident or reward a student with an immediate call home to report a good grade. In one incident. a student having a seizure received quick medical help in the classroom despite the fact the nearest landline telephone was in the school office. a half-mile away.

Similar applications exist in rural. suburban and urban environments. Indeed. there are as many applications as there are opportunities and needs for mobility -- or for efficient and economical telecommunications. In rural areas. wireless telecommunications promises to support educational. agricultural. and medical applications -- including support for rural mobile emergency units and constant effective communications for rural community hospitals. clinics. and their professional and volunteer staff.

Another demonstration project funded by the CTIA Foundation for Wireless Telecommunications is at New York's Columbia-Presbyterian Medical Center where wireless is providing a system of coordinated care to tuberculosis patients. This project. done in conjunction with the New York City Department of Health and the Visiting Nurse Services of New York City. enables visiting nurses equipped with laptop computers and wireless modems to treat patients in their homes.[16]

The Columbia-Presbyterian health care project uses wireless communications and networked databases to:

- **coordinate the many health care providers treating TB patients;**
- **respond better to patient needs;**
- **ensure appropriate TB protocols are followed, thus reducing treatment failures and drug-resistant strains of TB;**
- **provide an infrastructure that will be used for the treatment of other diseases;**
- **ensure confidentiality of medical records on an electronic network; and**
- **evaluate and disseminate the results of the demonstrations.**

Wireless telecommunications is an important expansion of universal telecommunications coverage. The competitive wireless market not only encourages new services, but the lack of regulation stimulates innovative applications.

[16] In the United States. approximately 10 million people have latent TB infections and 2,000 die of TB each year. After a long decline in TB deaths. the mortality rate has begun to climb in recent years. AIDS. poverty. the rise in antibiotic resistant strains of TB. along with a host of health factors and social conditions have caused this emerging public health crisis. Tuberculosis is on the rise nationwide. especially in New York City. Los Angeles. Miami. and Washington. DC. Home care follow-up is key to ensuring that the full course of treatment is completed.

Yet the Wireless Model is Under Attack (Even for Wireless)

This exciting wireless success story is so unlike other telecommunications policy experience that legislators and regulators often overlook the wireless paradigm when developing policy.

Telecommunications legislation in the 103rd Congress, for instance, put the wireless success story at risk by imposing on it regulatory policies intended for monopolies. The policy approach of the Administration and the Senate threatened to impose on all telecommunications carriers a "one-size-fits-all" regulatory construct. That approach proposed to burden competitive carriers with anti-competitive rules; forcing them to submit to and then wrestle to get out from under these burdens before being allowed to return to competition. Such a policy approach threatens to harm consumers and destroy jobs by discouraging investment and curtailing new competitive services.

The House Commerce Committee, on the other hand, embraced the wireless model and exempted these competitive services from the monopoly-based regulations applicable to other less competitive carriers. As Representative Jack Fields said at the January 27, 1994, Hearing of the House Subcommittee on Telecommunications and Finance: "Last year we began the process of building a national telecommunications infrastructure when we adopted a regulatory framework for wireless telecommunications services built upon the same concepts contained in H.R. 3636. Today we will take the next step in the process of crafting a national telecommunications policy as we turn our attention to the other sectors of the telecommunications industry."

On January 9, 1995, Representative Fields appeared before the Senate Commerce Committee Hearing on Telecommunications, and stressed that **the goal of telecommunications legislation "should be to provide guidance without micromanagement,"** and that **"our theme will be to regulate only where absolutely necessary and to let market forces govern."** As Representative Fields declared, "by removing statutory and regulatory barriers to entry, we will provide new opportunities and new competition that will build the infrastructure of the next century."

Finally, although 42 states now recognize that competition benefits consumers more than regulation, state regulators in eight states -- Arizona, California, Connecticut, Hawaii, Louisiana, New York, Ohio and Wyoming -- are fighting at the FCC to resist a Congressional mandate to open their markets fully to competition, through the continued application of rate and entry regulation to the wireless industry. State and local regulators are also using zoning and other permit requirements to prevent companies from building wireless telecommunications systems.

1. *Attacking the Wireless Paradigm*: State Rate Regulation Raises Prices

In 1993, Congress preempted state rate and entry regulation because it delays price reductions, prevents companies from offering innovative service packages, and replaces competition in the marketplace with competition in hearing rooms. The FCC is now hearing petitions by eight states which claim they should be exempt from this preemption and be allowed to regulate wireless service.

A recent study by Dr. Jerry Hausman, MacDonald Professor of Economics at MIT, demonstrates that ***rates in deregulated states are 15 percent lower than rates in states which regulate***, and that subscribership is higher in deregulated states.[17] Even when rates decline in states which do regulate, **rates decline further and faster in states which do <u>not</u> regulate.**

Decline in Rates in Unregulated State v. Regulated State

	January 1994	November 1994	Percent Change
Boston	Regulated $79.91	Unregulated $69.99	-12.41%
Hartford	Regulated $93.31	Regulated $90.75	-2.74%

In Boston, for instance, the price of 160 minutes of cellular service fell from $79.91 in January 1994 -- when cellular service was still regulated by the state -- to $69.99 in November 1994, after cellular service had been deregulated. **The price of <u>deregulated</u> cellular service decreased by 12.41 percent in just ten months** -- far outstripping the price decline in neighboring Hartford, Connecticut, over that same period, where **the price of <u>regulated</u> cellular service fell only 2.74 percent** from $93.31 to $90.75.

Regulation leads to higher prices because it alerts competitors in advance and creates a forum -- the state Public Utilities Commission -- where the rate decrease can be fought by procedural means. In California, for instance, resellers have repeatedly used the PUC to stop discount and promotional plans, and a new wireless entrant used the PUC to stop LA Cellular's proposed price reductions.

---

[17] *See* Affidavit of Professor Jerry A. Hausman, September 14, 1994, filed as an attachment to CTIA Opposition to Petition of the State Public Utility Commission, PR Docket Nos. 94-101, *et al.*, at 4-6.

In California alone, in 1993, rate regulation cost consumers $250 million in rate decreases which the state PUC delayed or rejected.[18]

Around the country, from New England to Oregon, from Chicago to Dallas, companies are innovating -- reducing the effective cost of cellular service by offering competitive prices, extended calling areas, discount calling plans, and packaged offerings.[19]

But regulation denies consumers benefits. For example, "packaging" -- the ability to combine service and equipment together -- reduces prices. The price of cellular equipment has fallen from thousands of dollars to just a few hundred dollars, or less. In 1989, a top-of-the-line cellular phone could cost $3,200. Today, a similar phone might cost $300, and the average walk-away price of a cellular phone is about $100.[20] ***Some plans even lower the price of a cellular phone to a dollar.***

This is because packaging is a strategy for reducing the cost of equipment to the consumer, one which has been recognized by the FCC, the staff of the Federal Trade Commission, and the Department of Justice as pro-competitive and pro-consumer.[21] **California's regulators, however, have forced consumers to pay higher prices** by prohibiting packaging, and by maintaining higher equipment prices. California's regulators have both taken money out of the consumers' pockets, and suppressed demand for cellular service.

---

[18] *See* Opposition of AirTouch Communications to CPUC Petition to Rate Regulate California Cellular Service, Docket No. 94-105, filed September 19, 1994, at iv, 41-47. *See also* Peter Sinton "How State Cellular Rule Has Failed," *San Francisco Chronicle*, December 7, 1994 (shown below).

[19] *See e.g.*, "Dallas, TX: Competing Down to Landline Levels," *The RSA Newsletter*, February 28, 1994, at 7; *see also* "Cellular Users Take Heart: Competition is Cutting Rates," *San Francisco Chronicle*, July 7, 1994.

[20] *See* Peter Sinton "An Inside Look at Cellular Phones," *San Francisco Chronicle*, December 7, 1994.

[21] *See Report and Order*, CC Docket No. 91-34, *Bundling of Cellular Customer Premises Equipment and Cellular Service*, 7 FCC Rcd. 4028, at 4030 (1992); *see also* Comment of the Staff of the Bureau of Economics of the Federal Trade Commission, CC Docket No. 91-34, filed July 31, 1991; Reply Comments of the United States Department of Justice, CC Docket No. 91-34, filed June 19, 1991.

San Francisco Chronicle

How State Cellular Rule Has Failed

The idea was to make cellular service companies compete for customers by offering lower rates

2. *Attacking the Wireless Paradigm:* Local Regulation Limits Competition

House Speaker Newt Gingrich recently emphasized that:

> We have to look seriously at those areas where the national economy requires preemption. The reason we went from the Articles of Confederation to the Constitution was to allow preemption where necessary. As a general rule, I want to decentralize decisions as much as I can, but clearly, for example, when you are in a cellular system you ought to be able to be in any cellular system in America and have it work. You can not suddenly arrive in a dead space that has been created by a local politician for their cronies who happen to own an obsolete investment.[22]

The ability of new wireless companies to expand the competitive environment can be hamstrung by any of 38,000 state, county and local governments who are not prepared -- or are unwilling -- to deal with requests to construct essential cell sites. Though cellular companies have already built 15,000 cell sites, they may need to build as many as 15,000 more over the next ten years to complete their coverage and meet demand. The winners of the PCS licenses which are currently being auctioned off may have to build as many as 100,000 cell sites.

[22] Speech of House Speaker Newt Gingrich to Wireless '95, New Orleans, February 1, 1995.

Local regulation frequently limits competition by impeding competitive entry. Because the ability of wireless companies to serve consumers depends on towers and antennas, competition is threatened when state and local regulators impose detailed regulations which unreasonably delay or effectively prohibit construction.

Zoning regulations delay the construction of necessary system elements such as towers or antennas, deny consumers service and increased competition, and become the basis for extorting hidden taxes.

For example, in Collier County, Florida, Wireless One Network had to devote 18 months to acquiring and meeting rigid conditions -- including a 40 percent give-back of land to the county for conservancy purposes, strict wetland regulations, and more -- just to **locate a tower site next to the county dump**. Ironically, after going through this process, after having been "steered" to the property by the county, and after getting permits from the county, the FAA, the FCC, the Department of Environmental Regulation, and South Florida Water Management, to name but a few of the eleven agencies involved -- they had to respond to still more restrictions and requirements. **Even picking the least intrusive and least ecologically sensitive site still cost a hundred thousand dollars in unnecessary additional expenses and delayed improved service by a year and a half.**

This type of construction is critical to meeting consumer demand and fostering competition. As the number of customers increases, the number of "cells" must also increase in order to match capacity to demand. Cell sites must also be deployed in order to fill-in and extend geographic coverage. Such sites cannot simply be deployed anywhere; they must be deployed in specific locations within the geographic contour in order to achieve full coverage. There is, indeed, a "best place" to locate these sites. Simply moving the tower or antenna has an impact on coverage and the quality of service available to consumers. Even when a wireless company compromises to achieve coverage with the least environmental impact, it can still be stymied by the process -- leaving customers with no service, or dropped and blocked calls.

Consumers are also hurt when inconsistent and unscientific state and local rules deprive them of service and choice. Some state and local bodies have begun adopting ordinances defining new standards for radiofrequency (RF) emissions which are in direct conflict with federal standards.[23] In one case, **the local zoning board rejected**

---

[23] *See e.g.*, Village of Wilmette Resolution 93-R-34. For example, zoning ordinances in Jefferson Country, Colorado, and the City of Stamford, Connecticut, provide that more stringent state or country standards may supplant the 1992 ANSI standard. *See* Jefferson County Reg. Section 2, P(1)(a), and City of Stamford Ordinance No. 527 Supplemental.

its own expert's conclusion and refused to allow a cell site on the grounds that it posed a threat to public health and safety.[24] Other governments are delaying construction pending modification of the facilities, or barring construction for no good reason, in spite of the fact that the facilities meet all safety standards and pose no health risks.[25]

3. *Attacking the Wireless Paradigm*: Local Regulation's Hidden Taxes

The local power to zone is now being leveraged to add **a usurious hidden tax to consumers' bills.** For instance, the City Council of Mobile, Alabama, recently proposed an ordinance imposing new "wireless communication" permit requirements and fees, including an annual "fee" per cell site of five percent of gross revenues.[26] Similar requirements in other markets include fees of up to seven percent of gross revenues -- with a direct impact on the consumers' pocketbooks as well as on the ability to deploy new technologies, provide improved services, and expand coverage.

Taxation of wireless telecommunications is a growth industry. For instance, consider the May 1994 issue of *Governing* magazine (the magazine of local and state regulation, published by *Congressional Quarterly*) in which a full-page article promoted PCS, **not as a telecommunications service for consumers, but as a vehicle to "make hefty annual contributions to municipal treasuries."** The message from the voters in November was clear -- no new taxes. Local governments using their zoning authority to impose hidden taxes on wireless consumers is the antithesis of what the electorate was saying.

---

[24] Rob Ryser "Tarrytown Extends Ban on Installation of New Cellular Antennas," *Gannett Suburban Newspapers*, December 6, 1994, at 3A ("We have been surprised by the board's action from the beginning. The expert that Tarrytown hired to study (antenna transmissions) came back and found our cellular installation safe.").

[25] *See e.g.*, San Francisco City Planning Commission Resolution No. 11399 (denying KRON-TV application to expand Mt. Sutro Tower facilities); City of West Hollywood City Council Resolution Nos. 1160 and 1161 (July 1993)(denying cellular tower applications). One New York appellate court overturned such a denial four years after the application was filed, finding that "the transmission from the cell site would not affect humans, animals or any other organisms." *See Cellular One v. Village of Dobbs Ferry*, 624 N.E.2d 990, 992 (1993).

[26] *See* Mobile, Alabama, 1994 Ordinance 57-089, "An Ordinance Establishing the Requirement for a Permit for and to Assess Fees for the Placement of Micro Cells, Pico Cells or Other Forms of Transmitters and Receivers for the Purpose of Providing Telephonic, Telephone, Telepoint, Paging or Other Similar Wireless Communication Services On or Within the Rights of Way and Establishing a Permitting Process to Provide for These Devices on Commercial Property Not Zoned for this Activity," Mobile City Code Sections 57-221 through 57-230.

M.J. RICHTER

From Fancy New Phones, Big Local Revenue Possibilities

If city governments get their acts together now, they can ensure that an innovative communications service soon to appear throughout the country will do more than offer telephone service to people on the run. It also can make hefty annual contributions to municipal treasuries.

*

Denver home phone, has been alerting the PCS system, via radio signals, of its current location in Chicago. The Denver switching center, after checking its database for the PCS subscriber's current location, then routes the call to Chicago. In Chicago, the call is routed from the regular wireline phone system to the PCS system and then to the PCS subscriber's portable phone.

The PCS elements that promise a new source of revenue for municipal governments are the small transmitter-receivers, or "microcells," installed throughout cities. More often than not, these microcells will be placed along public rights-of-way adjacent to utility easements and streets. It will be nearly impossible for any PCS network operator to establish a full-blown PCS system in any city without obtaining right-of-way access, for which cities can—and

*

E. Eugene Webb, assistant director of information and communications services for the city of St. Petersburg, estimates that the 5 percent fee could put about $1 million per year into the city coffers from each PCS provider. Currently, the city derives about that much from the 5 percent franchise fee paid by the cable TV system operator for access to the city-owned right-of-way for its cables.

The St. Petersburg ordinance is also the city's vehicle for regulating PCS operators. Microcells cannot be located on residential property, for example. To obtain a permit to install microcells on commercial property, a PSC applicant must submit detailed design specifications for each proposed microcell site along with a signed permission form from the property owner. Violators face stiff fines.

*

"If companies are going to be putting that much money into this up front, cities better get something on the books right now, rather than when they've got an army of lawyers standing there whose job it is to get these systems in place," Webb says. "They'll just roll over local governments at that point."

Webb and his colleagues in St. Petersburg have put together four model ordinances that other cities could use as templates for their respective jurisdictions. Webb can be reached at 813-893-7050

4. *Attacking the Wireless Paradigm:* "Unbundled Interconnection" Threatens Investment and Jobs

The one essential fact governs: **in order to have competition, jobs, and customer benefits, it is necessary to build wireless facilities**. The previous discussion addressed how non-federal regulation thwarted that investment and, thus, competition. But some equally wrong-headed federal proposals will have the same negative effect on investment and competition. For instance, the policy of "unbundled interconnection" for wireless services has the simple and direct effect of discouraging the construction of competitive facilities.

This regulatory proposal, which uses the "interconnection" label, is a genuine threat to building out a wireless infrastructure. Under the proposed policy of "unbundled" interconnection, a telecommunications provider is required to offer its facilities, in a piecemeal fashion, at any technically practicable and economically feasible point. "Interconnection" is essential to the success of telecommunications services. Any subscriber to any service must be able to interconnect with any subscriber on any other telecommunications service.

- **"Good" Interconnection:** Current policy requires the local exchange carrier (LEC) to provide interconnected access to the public switched telephone networks to all other telecommunications carriers. This is because they are deemed to have **bottleneck control** over facilities reaching local customers. Such interconnection is generally arranged through good faith negotiation, as opposed to the use of tariffs.

This interconnection permits wireless users to reach wired companies' customers, as well as the customers of competing wireless companies. Thus, here in Washington, D.C., a Cellular One customer can reach a LEC customer, or a Bell Atlantic Mobile customer, or a Sprint wireless customer, all through the LEC.

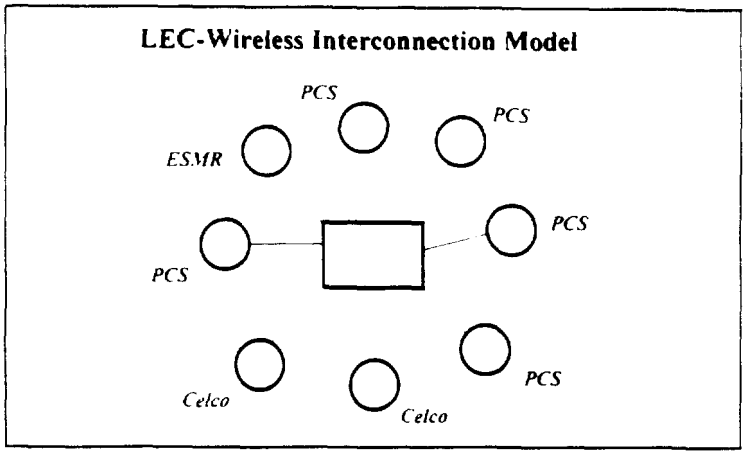

As the number of competing carriers increases, the "bottleneck" position of the ubiquitous LEC becomes even more important, as it acts as the common "hub" for communication. Extending the obligation of LECs to interconnect with these new CMRS providers, subject to the same mechanism of good faith negotiations, will achieve the desired result of communication between networks. **Because CMRS providers will be interconnected to a LEC, they will also be interconnected to each other.**

In cases where **direct** interconnection between CMRS providers is reasonable, that is, where it is economically or operationally more efficient than their interconnection through the public switched telephone network, they are free to enter into such arrangements. But such situations will vary from carrier to carrier and market to market, depending on a variety of factors and conditions.

- **"Unbundled" Interconnection:** Contrast this wise policy, however, with so-called **unbundled** interconnection where any party can demand of a telecommunications carrier that they have the use of the **pieces** of the carriers' network so that they will not have to build their own. The first problem is that such a policy will require a

large bureaucracy to implement. Mandatory unbundled interconnection will require regulators to impose an accounting structure to police the price of individual service "bundles." Indeed, for this reason and others, the FCC has already failed to establish unbundled interconnection for **regulated** LEC services even with the benefit of such a structure.

The biggest travesty of this policy is that it will slow and undercut competition by destroying incentives for companies to enter the CMRS market and build-out systems. To illustrate this point, imagine one carrier has built twelve cell sites to cover their license area and gain a competitive advantage over another carrier which has built only three cell sites in the area. If the second carrier could force the first to give it unbundled access to its cell sites -- without assuming the risks which the first carrier assumed -- then why would the second carrier ever make the investment to build its own additional cell sites? More importantly, if the first carrier realized it would not gain a competitive advantage by investing in those nine extra cell sites, why would it even build them in the first place?

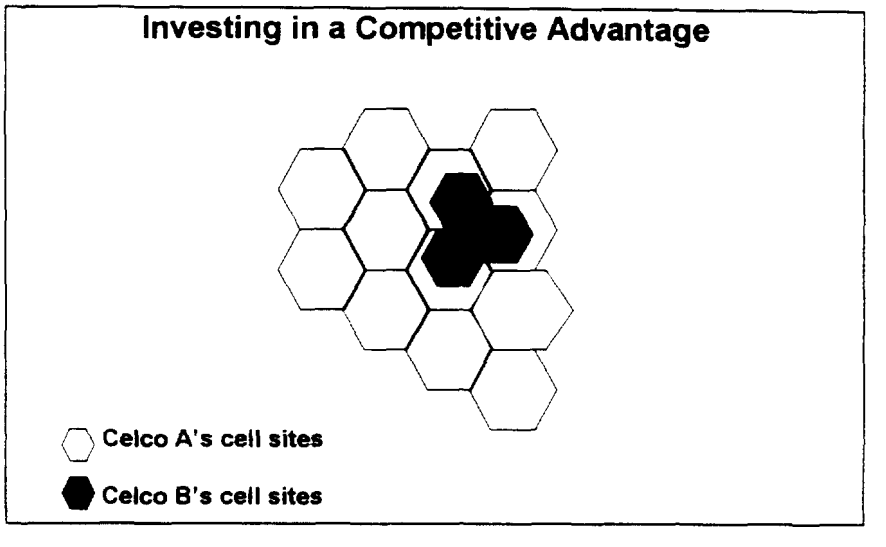

In a competitive environment, companies invest in building facilities in order to gain an advantage over competitors. Wireless service providers have been building systems across rural America, investing in lower margin areas to create competitive advantages, and stimulating interest in new wireless services. **Why should anyone build facilities and create competition -- particularly in rural areas -- if they will immediately lose the competitive advantage of this new investment?** The unbundled interconnection concept is a sabotage of competition -- in the name of promoting competition, it removes the incentive to gain a competitive advantage and thus ends up killing competition.

The wireless industry will invest over $1 billion this year to get a competitive jump on the "other guy." To discourage that investment and destroy the jobs and consumer benefits it would produce is folly.

5. *Attacking the Wireless Paradigm*: Competitors Seek to Use Government to Limit Competition

The FCC is considering a proposal from MCI to give long distance companies the right to demand so-called "equal" access from all wireless carriers. Congress will also be asked to consider this matter in the forthcoming debate over telecommunications legislation.

A. What Is "Equal" Access?

When the Bell System was broken up into long distance and local exchange components, there was a fear that the local monopoly might thwart long distance competition by showing undue favoritism to one specific long distance carrier. To prevent this, the Modification of Final Judgment (MFJ) required that Regional Bell Operating Company-affiliated (RBOC) local carriers would be only a conduit for the interexchange carriers (IXCs), granting the IXCs the right to ballot the LECs' customers to determine which long distance service provider they desired. Because of its position in the IXC market, a similar provision was imposed on AT&T as a precondition to the acquisition of McCaw Cellular Communications.

Thus, "equal" access was created to ensure competition in the long distance market. "Equal" access has no local pro-competitive effect on the monopoly carriers which must provide it and has a noticeable anticompetitive effect on otherwise competitive wireless carriers.

B. How Does "Equal" Access Apply to Wireless Today?

In a word -- haphazardly. "Equal" access was not originally intended to apply to wireless services, which were not at issue in the MFJ. But the coincidence in the timing of the adoption of the MFJ and the creation of the cellular industry resulted in the application of "equal" access to RBOC-affiliated wireless carriers. Now, wireless carriers

affiliated with RBOCs or AT&T are required to provide "equal" access.[27] No other wireless carriers have this requirement.

The present situation is distorted and anticompetitive. One set of wireless carriers can offer services -- such as long distance -- that their competitors cannot. The result of these distortions is that consumers are denied their choice of additional services and providers. Removing "equal" access from all wireless carriers and not imposing it on new carriers is the best means of benefiting consumers by assuring competitive choice and parity.

C. "Equal" Access is Anticompetitive in the "Local Service Market"

In the local service market today, "equal" access policy distorts the marketplace and has anticompetitive effects. "Equal" access does nothing to increase local competition, and in fact prohibits RBOC-affiliated carriers from competing on equal terms with independent wireless competitors and landline LECs. "Equal" access thereby prevents some carriers from providing their customers with improved services and reduces the competitive pressure for all wireless carriers to compete on the basis of wide local calling areas and innovative service packages. Thus, "equal" access perversely conflicts with Congress' decision in 1993 to foster competition by eliminating entry barriers and heavy-handed regulations which harm consumers by denying them the freedom to choose innovative technologies and affordable service packages.

In fact, wireless carriers compete not only with each other, but also with both landline LEC and IXC telecommunications service providers. In part, this is a result of the different architecture which wireless carriers have developed -- an architecture which has no relation to the landline networks, and which recognizes no artificial regulatory distinction between "local" and "long distance" calling areas. Wireless carriers and their architecture focus on the needs of consumers, not flawed regulatory assumptions.

Wireless carriers are prepared to compete to meet the needs of consumers for mobile services in a wide variety of environments, but the "equal" access policy treats these innovative companies as if fierce competition is the last thing consumers want. Instead of promoting competitive offerings and a give-and-take battle for the consumers' loyalty, "equal" access distorts competition by imposing arbitrary distinctions on the marketplace and prohibiting RBOC-affiliated carriers from offering competitive services.

---

[27] AT&T's "equal" access obligation was imposed as a condition of its acquisition of McCaw Cellular Communications. *See* Competitive Impact Statement, filed in Civil Action No. 94-01555, *United States v. AT&T Corp. and McCaw Cellular Communications, Inc.*, (D.D.C. August 5, 1994).

Even if it is a thousand miles away from its affiliated landline "bottleneck," an affiliated RBOC-owned wireless company's heritage means that it will not be fully competitive. It will be forced to reduce the size of its local calling areas to conform with arbitrary boundaries (such as Local Access and Transport Areas or "LATAs") which have no relation to consumer benefits.

There is an inherent conflict between such LATAs or "equal" access calling area boundaries and a CMRS provider's calling areas. The LATA boundary for "equal" access is a creation of the MFJ, which intended to divide landline service between local and long distance calls. In contrast, many wireless carriers compete by offering larger "local" calling areas to meet the needs of their mobile customers. The very notion of dividing a mobile service into local and long distance services on the basis of the MFJ's rules for a landline world ignores the benefits of wireless architecture and the differences in the demands of mobile users -- facts which have led to approximately 60 MFJ waivers for wireless service areas.[28]

The proposal to extend the "equal" access requirement to all wireless carriers will simply compound the harm to consumers and competition. Unless identical calling boundaries are imposed on all wireless providers, imposing "equal" access in an environment in which carriers' service areas range from the smaller calling areas of cellular carriers to the larger service areas of PCS and ESMR licensees (*i.e.*, LATAs and cellular MSAs and RSAs vs. MTAs and BTAs) will deny consumers the full benefits of a competitive CMRS market structure by creating a "funhouse" maze of arbitrary and distorted market boundary rules.

D. "Equal" Access is Anticompetitive in the "Long Distance Market"

Ironically, while originally intended to insure competition in the long distance market, an "equal" access requirement will **not** increase the level of either CMRS or interexchange competition, but actually will have a number of anticompetitive effects.

First, by reducing the size of the wide-area calling regions currently provided by some wireless carriers, "equal" access will prohibit wireless carriers from offering consumers a competitive "long distance" alternative to the traditional interexchange carriers, and it actually may raise the cost of wireless calls for existing customers.

Imposing "equal" access on CMRS licensees will remove actual and potential long distance service providers from the market, while the pro-competitive alternative of

[28] *See* Kellogg and Huber *Federal Telecommunications Law* (1992) at 682.

relieving wireless carriers of "equal" access obligations will permit CMRS licensees to provide services that guarantee lower rates to their customers, at least for calls within their calling area. Requiring CMRS providers to divide their expansive local calling areas into "equal" access areas will force them to separate a long distance component from their service offerings to customers. The result will be that customers who now receive the benefit of such wide-area service for only the basic airtime charge will be forced to pay more, since there must be some additional charge for long distance.[29] Thus, imposing "equal" access will harm CMRS subscribers by limiting the scope of their basic-rate calling areas and by requiring them to pay "long distance" charges in addition to basic air time rates. Such increased rates may make actual or potential service providers' wide-area offerings uncompetitive.

It is well-known that traditional regulatory policy tools are two-edged. For example, while a tariffing requirement is effective in constraining the ability of a firm with market power from using its power in an anticompetitive fashion, the FCC often has acknowledged that *in a competitive market* tariffs actually have an anticompetitive effect since they impede innovation, dampen competitive forces, and facilitate price stability.

Regulators' traditional policy tools have the opposite and unintended effect of constraining competition in a competitive market. This is widely accepted and is "mainstream" regulatory theory -- indeed, it serves as the foundation of the FCC's detariffing of cellular and CMRS in the *CMRS Second Report and Order*.[30] "Equal" access is just like a tariffing requirement in this regard: it has served well as a tool to constrain LECs from exercising market power to skew the results of a competitive long distance market, but it actually will work *against* the development of a competitive CMRS local and long distance market.

"Equal" access will frustrate the workings of a competitive CMRS market for a number of reasons. First, as noted above, it will remove real and potential competitors from the long distance market. Second, it will frustrate the ability of long distance providers to pro-competitively integrate wireless and long distance services. It is a given that within two years, there will be far more CMRS providers in each market than there are *major* long distance carriers.[31] Both AT&T and Sprint already have announced strategies to extend their "brand" identity to local wireless services, a strategy which MCI and other long distance carriers have said they too will adopt.

---

[29] Sections 201 and 202 of the Communications Act probably would prevent CMRS providers from offering "free" long distance to their customers, since rates must be cost-based and non-discriminatory.

[30] *See Implementation of Section 3(n) and 332 of the Communications Act, Regulatory Treatment of Mobile Services*, GN Docket No. 93-252, *Second Report and Order*, 9 FCC Rcd. 1411, at paras. 177-79 (1994) (*CMRS Second Report and Order*), *Erratum*, 9 FCC Rcd. 2156 (1994).

[31] Two years is the *absolute minimum* time the FCC will need to complete the rulemaking process and permit an 18 month transition period to equal access.