EX PARTE OR LATE FILED

1201 NEW YORK AVENUE, N.W.
WASHINGTON, D.C. 20005-3919
(202) 789-3400
FAX (202) 789-1158

# KECK, MAHIN & CATE

FILE NUMBER

DIRECT DIAL (202) 789-3401

March 20, 1995

RECEIVED
MAR 20 1995
FEDERAL COMMUNICATIONS COMMISSION
OFFICE OF SECRETARY

Mr. William F. Caton
Secretary
Federal Communications Commission
1919 M Street, N.W.
Room 222
Washington, DC 20554

DOCKET FILE COPY ORIGINAL

Re: In the Matter of Billed Party Preference for 0+ InterLATA Calls, CC Docket No. 92-77

Dear Mr. Caton:

On March 20, 1995, Albert H. Kramer and Robert F. Aldrich, of this firm, representing the American Public Communications Council ("APCC"), and Greg Haledjian and Lesa Sawicki of APCC's staff, had a meeting with Common Carrier Bureau Chief Kathleen Wallman and Special Assistant Susan Sallet. The purpose of the meeting was to provide a briefing on regulatory issues facing the payphone industry. In the course of the briefing, we provided the enclosed material, some of which is relevant to the above-captioned proceeding.

Sincerely,

Robert F. Aldrich

Robert F. Aldrich

Enclosure

RFA/gg

No. of Copies rec'd 0+1
List A B C D E

# OVERVIEW

# OF

# PUBLIC COMMUNICATIONS POLICY

# AS IT

# AFFECTS THE

# INDEPENDENT PUBLIC PAYPHONE

# MARKETPLACE

American Public Communications Council
By: Keck, Mahin & Cate

# WHO IS APCC?

- NATIONAL TRADE ASSOCIATION OF INDEPENDENT PUBLIC PAY TELEPHONE MANUFACTURERS AND PROVIDERS

- FOUNDED IN 1988 AS COUNCIL OF NORTH AMERICAN TELECOMMUNICATIONS ASSOCIATION

- CURRENTLY MORE THAN 1000 MEMBERS

- CLOSE RELATIONSHIP WITH STATE PAYPHONE ASSOCIATIONS

- ACTIVE IN ALL FCC PROCEEDINGS AFFECTING PAYPHONES AND OPERATOR SERVICES

American Public Communications Council
By: Keck, Mahin & Cate

INDEPENDENT PUBLIC PAYPHONE }
CUSTOMER OWNED PAY TELEPHONE }
COMPETITIVE PAY TELEPHONE }
PRIVATE PAY TELEPHONE }

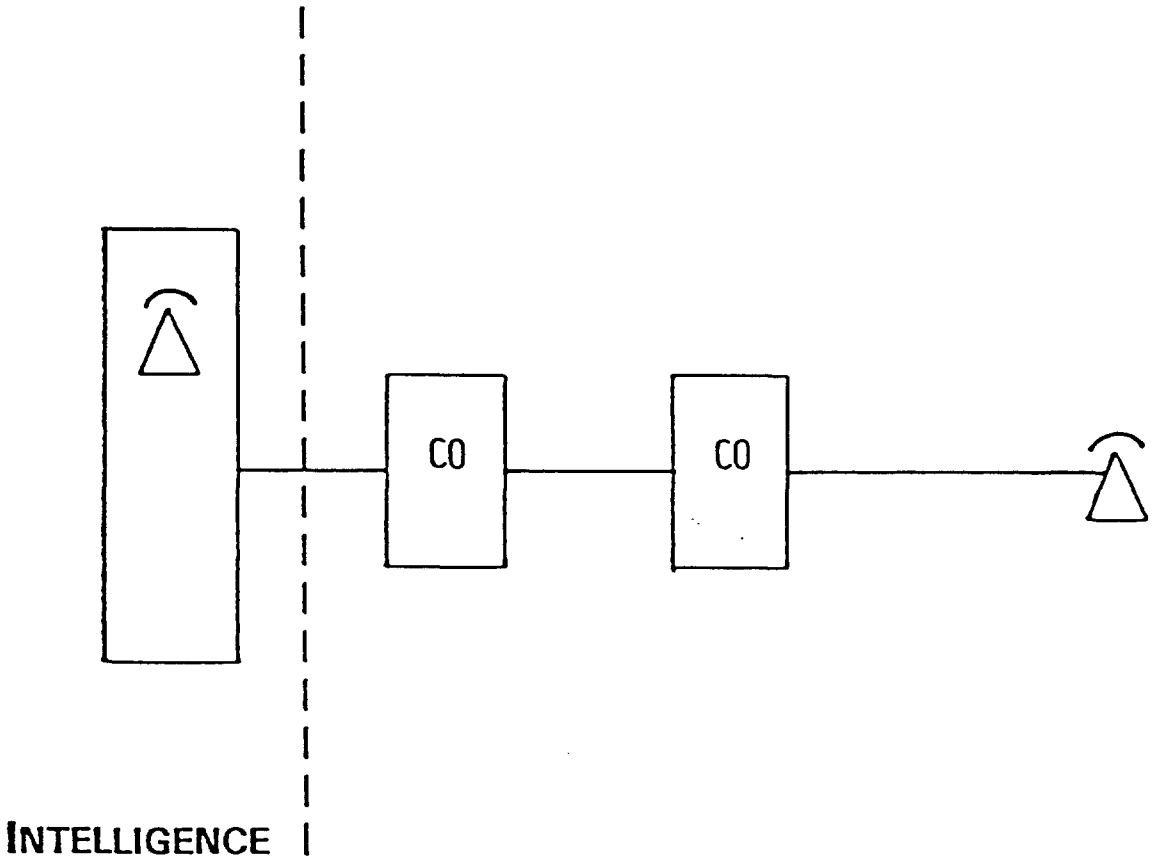


"SMARTS" RESIDE IN THE PAY TELEPHONE ITSELF, OR IN DISTRIBUTED TECHNOLOGY. THEY DO NOT RESIDE IN THE NETWORK.

SERVICES PROVIDED ARE SET-BASED NOT NETWORK-BASED.

*Courtesy of Intellicall.*

American Public Communications Council
By: Keck, Mahin & Cate

## LEC

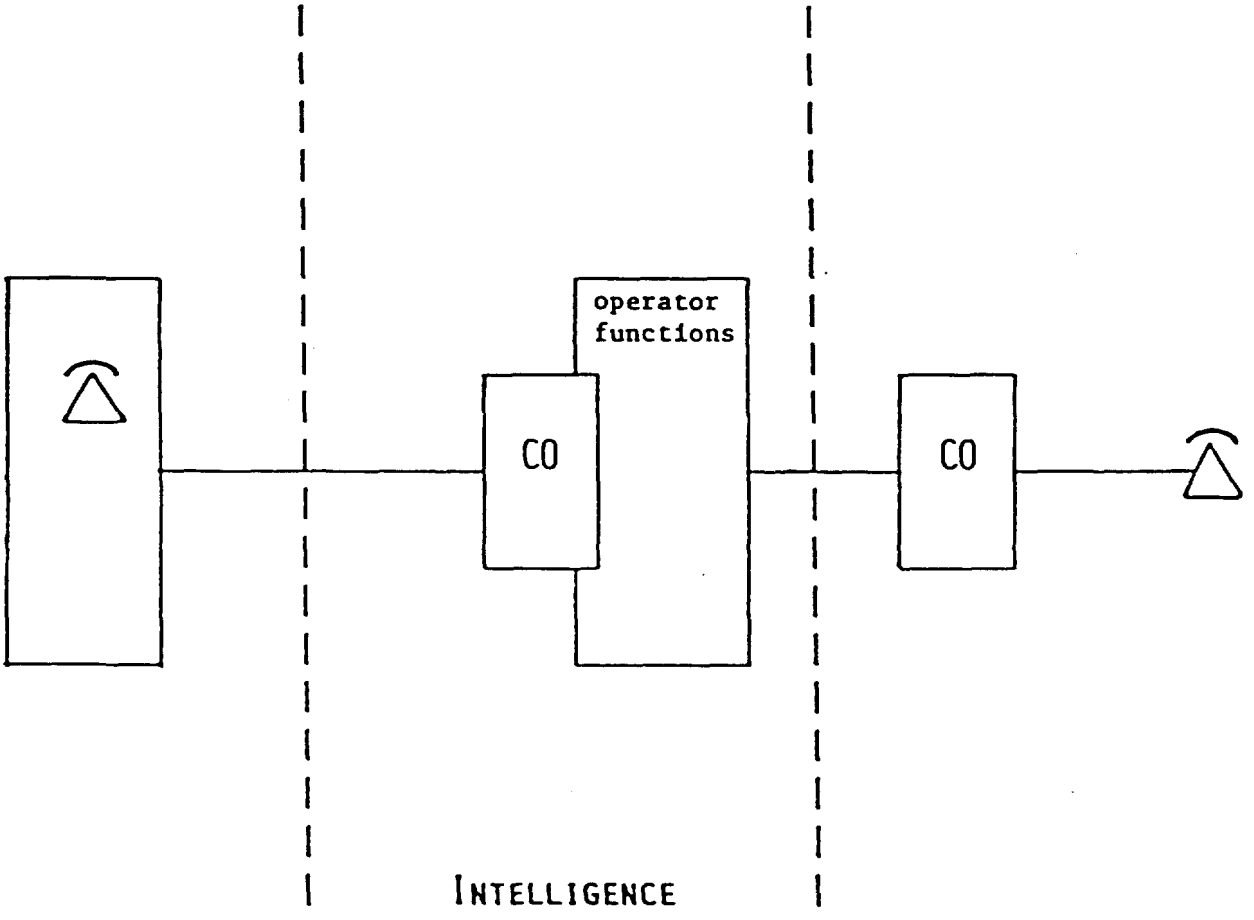


FUNCTIONALITY OF PAY TELEPHONE RESIDES IN THE NETWORK.

SERVICES ARE ALL NETWORK-BASED.

*Courtesy of Intellicall.*

American Public Communications Council
By: Keck, Mahin & Cate

THE INDEPENDENT PUBLIC PAYPHONE INDUSTRY HAS BEEN FIRST IN:

- INTRODUCING NEW SERVICES:

  STORE AND FORWARD PLATFORM

  COMMERCIAL CREDIT CARD ACCEPTANCE

  SPECIALIZED INMATE SERVICE CAPABILITY

  AUTOMATED COLLECT CALL CAPABILITY

  VOICE MESSAGING SERVICES

  VOICE RECOGNITION SERVICES

- INTRODUCING MAINTENANCE AND REPAIR EFFICIENCIES:

  POLLING CAPABILITY

  COMPUTERIZED DIAGNOSTICS

  IMPROVED COIN RETURN FUNCTIONS

American Public Communications Council
By: Keck, Mahin & Cate

# Technology Timeline

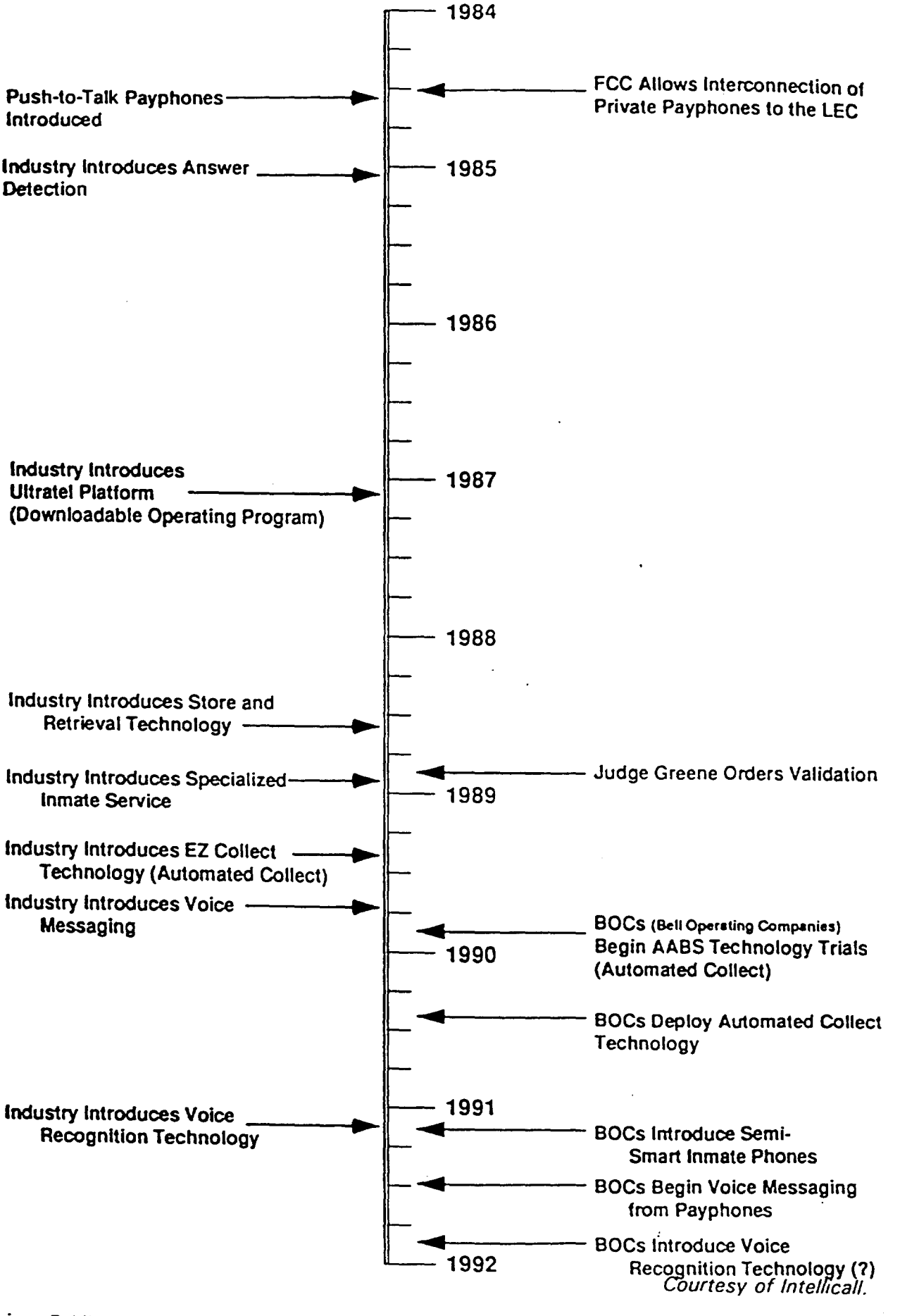


*Courtesy of Intellicall.*

American Public Communications Council
By: Keck, Mahin & Cate

# MANY COMPETITIVE PAY TELEPHONES ARE BEING INSTALLED IN UNDERSERVED AREAS

- CALIFORNIA DATA SHOW THAT 1991 INSTALLS WERE LARGELY IN AREAS WHERE PAY TELEPHONE SERVICES WAS NOT PREVIOUSLY PROVIDED

- STATE OF NEW YORK QUOTED AS CONCLUDING THAT, IN DISADVANTAGED AREAS, APPROXIMATELY 40% OF PAY TELEPHONES ARE COMPETITIVELY PROVIDED

- CONFINEMENT FACILITIES-WHERE PREVIOUSLY AVAILABLE SERVICES WERE SEVERELY LIMITED

## PacBell DATA SUBMITTED IN CALIFORNIA WORKSHOPS

EX PARTE PRESENTATION - CC Docket No. 91-35

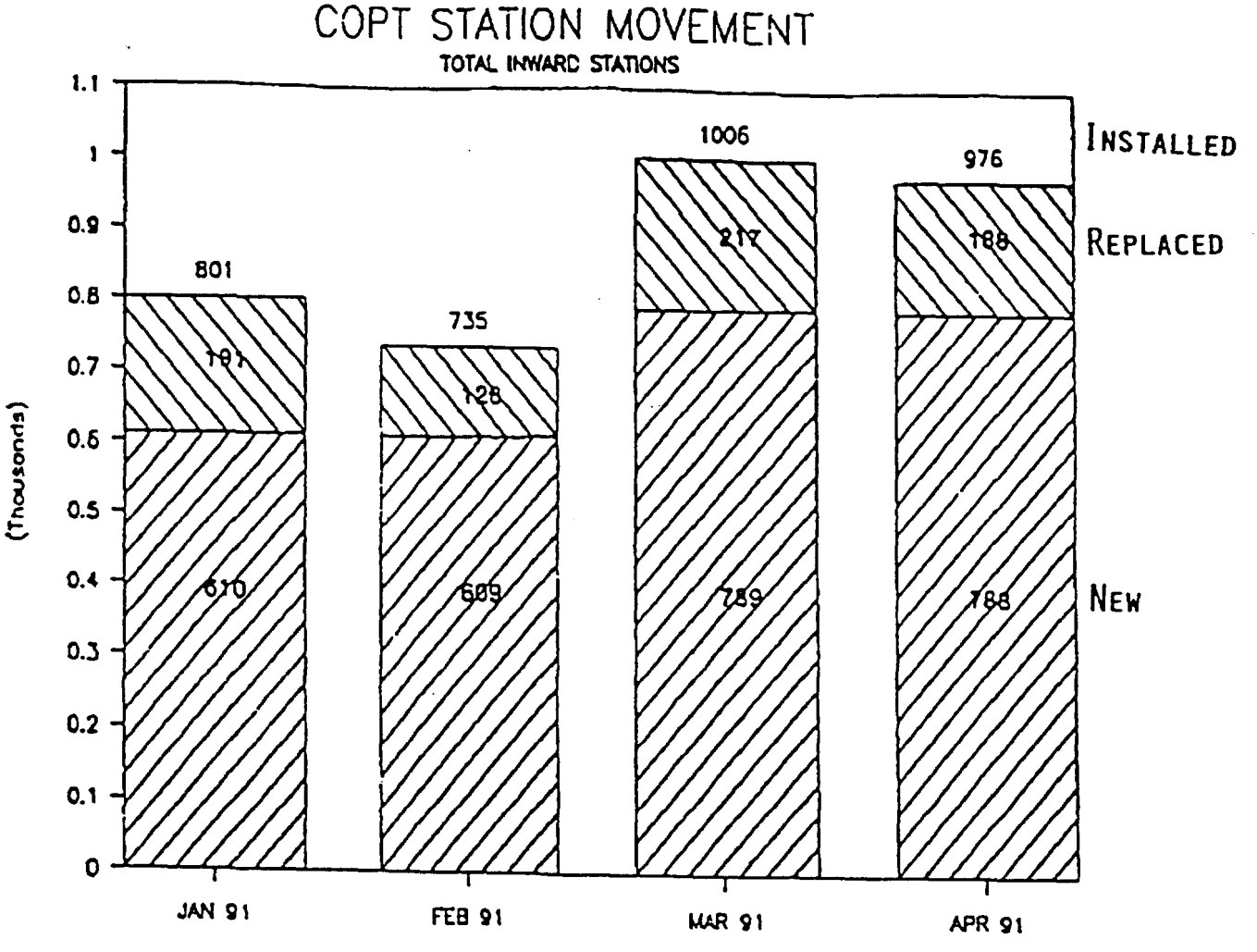


*Courtesy of Intellicall.*

American Public Communications Council
By: Keck, Mahin & Cate

# REVENUES OF INDEPENDENT PAYPHONE PROVIDERS

| | |
|---|---|
| LOCAL COIN | • GENERALLY CAPPED AT 25 CENTS |
| "SENT-PAID" (COIN) TOLL | • INTRASTATE RATES OFTEN CAPPED |
| "OPERATOR ASSISTED" (0-/+) | • MOSTLY CALLING CARD OR COLLECT<br>• INTRASTATE RATES OFTEN CAPPED |

TWO APPROACHES TO 0+:

1. ROUTED TO IXC (OSP)

   IPP PROVIDER COLLECTS COMMISSION FROM IXC

   IXC:

   - PROCESSES CALL
   - COLLECTS CHARGES
   - PAYS FOR:
     - NETWORK USAGE
     - VALIDATION
     - BILLING AND COLLECTION

2. "STORE-AND-FORWARD":

   IPP PROVIDER:

   - PROCESSES CALL
   - COLLECTS CHARGES
   - PAYS LEC/IXC FOR
     - NETWORK USAGE
     - VALIDATION
     - BILLING AND COLLECTION

American Public Communications Council
By: Keck, Mahin & Cate

# IPP Providers Often Deprived of Opportunity to Earn Revenue From 0+ Calls

## LEC Public Payphones

0+ Calls

A. IntraLATA Toll: Carried by LEC

1. LEC gets revenue from operator charges and carriage charges
2. LEC pays commissions to location owner for this traffic

## Independent Public Payphones

0+ Calls

A. IntraLATA Toll: Often Required By Regulation to go to LEC

1. LEC gets revenue but incurs no costs
2. LEC pays no commission to location owner or IPP provider for this traffic
3. IPP provider receives no revenue

## LEC Public Payphones

0+ Calls (Cont'd)

B. InterLATA, International

1. Generally goes to presubscribed OSP
2. LEC gets access revenue
3. OSP pays commissions to location owner for this traffic
4. LECs <u>also</u> generally pay commission for this traffic even though they don't handle it
   - Level of commissions generally exceed access charge revenue
   - Commissions charged back through separations

## Independent Public Payphones

0+ Calls (Cont'd)

B. InterLATA, International

1. Goes to presubscribed OSP
2. LEC gets access revenue
3. IPP provider pays commission to location owner
4. LEC pays <u>no</u> commission to IPP provider

# IPP PROVIDERS USUALLY DEPRIVED OF OPPORTUNITY TO EARN REVENUE FROM 0- CALLS

## LEC PUBLIC PAYPHONES

### 0- CALLS

A. ALWAYS GOES TO LEC

1. INTRALATA TOLL
   - LEC GETS REVENUE
   - LEC GENERALLY PAYS COMMISSION TO LOCATION OWNER

2. INTERLATA, INTERNATIONAL
   - TRANSFERRED TO AN OSP SUBSCRIBED TO OPERATOR TRANSFER SERVICE
   - LEC RECEIVES TRANSFER FEE

## INDEPENDENT PUBLIC PAYPHONES

### 0- CALLS

A. GENERALLY MUST GO TO LEC

1. INTRALATA TOLL
   - LEC GETS REVENUE BUT INCLURS NO COSTS
   - LEC PAYS NO COMMISSION TO LOCATION OWNER OR IPP PROVIDER
   - IPP PROVIDER GETS NO REVENUE

2. INTERLATA, INTERNATIONAL
   - TRANSFERRED TO AN OSP SUBSCRIBED TO OPERATOR TRANSFER SERVICE
   - LEC RECEIVES TRANSFER FEE
   - IPP PROVIDER GETS NO REVENUE

B. 0 (OR "0-") ROUTED TO PRESUBSCRIBED OSP

1. MINORITY OF JURISDICTIONS

**ON A SIGNIFICANT AMOUNT OF INTERSTATE 0- THERE IS NO OPPORTUNITY FOR IPP PROVIDERS TO EARN REVENUE**

# FEDERAL "DIAL-AROUND" COMPENSATION
# ADDRESSES ONLY A SMALL PORTION OF THE PROBLEM

## LEC PUBLIC PAYPHONES

### DIAL-AROUND COMPENSATION

A. INTRALATA TOLL
   1. IN SOME JURISDICTIONS, MUST GO TO LEC; IN OTHERS, DIAL-AROUND ALLOWED

B. INTRASTATE INTERLATA
   1. ALL PLANT AND COSTS ASSOCIATED WITH ALL LEC PUBLIC PAYPHONES IN REGULATED REVENUE REQUIREMENT

C. INTERSTATE AND INTERNATIONAL
   1. COMPENSATED BECAUSE LOOP COST GOES TO CCL
   2. OTHER COMPENSATION BECAUSE OTHER COSTS GENERALLY GO THROUGH SEPARATIONS

## INDEPENDENT PUBLIC PAYPHONES

### DIAL-AROUND COMPENSATION

A. INTRALATA TOLL
   1. IN SOME JURISDICTIONS, MUST GO TO LEC; IN OTHERS, DIAL-AROUND ALLOWED
   2. CURRENTLY NOT COMPENSATED

B. INTRASTATE INTERLATA
   1. CURRENTLY NOT COMPENSATED EXCEPT IN FL, GA, SC

C. INTERSTATE AND INTERNATIONAL
   1. PAYPHONE PROVIDER MUST ALLOW DIAL-AROUND TO IXCS
   2. FCC PRESCRIBED COMPENSATION IN AMOUNT OF $6/MONTH/IPP (NOTE: COMMISSION RECENTLY AUTHORIZED AT&T TO COMPENSATE AT .25 PER CALL)

# DIAL-AROUND COMPENSATION

BASIC ISSUE: IPP PROVIDERS RECEIVE REVENUE FOR ONLY SOME OF THE CALLS MADE AT THEIR PAYPHONES. IPP PROVIDERS BELIEVE ALL CALLS THAT ARE REVENUE-PRODUCING SHOULD CONTRIBUTE SOMETHING TO THE FIXED COST OF THE PAYPHONE.

BEFORE 1992, IPP PROVIDERS RECEIVED NO REVENUE ON:

"ACCESS CODE" CALLS:

10XXX-0- OR 10XXX-0+

950-XXXX

1-800-XXX-XXXX "CARRIER-SPECIFIC" ACCESS CODE

1-800-SUBSCRIBER

0- TRANSFER CALLS

American Public Communications Council
By: Keck, Mahin & Cate

# WHY IS DIAL-AROUND COMPENSATION IN THE PUBLIC INTEREST?

SPRINT ANALYZED 6 MILLION INTERLATA COINLESS CALLS:

| | |
|---|---|
| 0+ | 25% |
| "ACCESS CODE" | 20% |
| 1-800-SUBSCRIBER | 55% |

DIAL-AROUND (ACCESS CODE AND 1-800-SUBSCRIBER) IS 75% OF COINLESS CALLS IN THIS EXAMPLE.

0+ COMMISSIONS COMPENSATE IPP PROVIDERS ON ONLY 25% OF COINLESS CALLS IN THIS EXAMPLE.

- "DIAL-AROUND" CALLERS PAY NOTHING FOR USE OF PAYPHONE
- ALL "INTERSTATE" PAYPHONE COSTS WERE LOADED ON 1+/0+ CALLERS
- UNFAIR TO IPP PROVIDERS TO BE COMPELLED TO ALLOW FREE USE OF THEIR PHONE
- INEQUITY VIS-A-VIS LEC PAYPHONES
- UNFAIR TO 1+/0+ CALLERS
- UPWARD PRESSURE ON 0+ RATES

American Public Communications Council
By: Keck, Mahin & Cate

# TOCSIA -- 47 U.S.C. § 226

BECAME LAW OCTOBER 17, 1990
TOOK EFFECT JANUARY 15, 1991

"THE COMMISSION SHALL CONSIDER THE NEED TO PRESCRIBE COMPENSATION (OTHER THAN ADVANCE PAYMENT BY CONSUMERS) FOR OWNERS OF COMPETITIVE PUBLIC PAY TELEPHONES FOR CALLS ROUTED TO PROVIDERS OF OPERATOR SERVICES THAT ARE OTHER THAN THE PRESUBSCRIBED PROVIDER OF OPERATOR SERVICES FOR SUCH TELEPHONES."

American Public Communications Council
By: Keck, Mahin & Cate

# CC DOCKET NO. 91-35

## FCC'S FIRST REPORT AND ORDER

AUGUST 9, 1991
6 FCC RCD 4736

"WE CONCLUDE THAT CONSIDERATIONS OF EQUITY REQUIRE US TO PRESCRIBE COMPENSATION."

- THE COMMISSION DEFINED DIAL-AROUND CALLS TO EXCLUDE 1-800 SUBSCRIBER CALLS. THUS, IPP PROVIDERS ARE STILL NOT COMPENSATED FOR AS MANY AS 50% OF INTERSTATE CALLS MADE USING THEIR EQUIPMENT.

## FCC'S SECOND REPORT AND ORDER

MAY 8, 1992
7 FCC RCD 3251

- THE COMMISSION RECOGNIZED THAT A USAGE-BASED DIAL-AROUND COMPENSATION SYSTEM WOULD BE BEST AND FOCUSED ON A PER-CALL COMPENSATION SYSTEM AS THE OPTIMUM METHOD.

- BECAUSE A PER-CALL SYSTEM WAS NOT TECHNOLOGICALLY FEASIBLE, THE COMMISSION IMPLEMENTED A FLAT-RATE DIAL-AROUND COMPENSATION SYSTEM UNTIL A PER-CALL SYSTEM BECOMES POSSIBLE.

- THE COMMISSION DIRECTED THE BUREAU TO CONTINUE MONITORING MOVEMENT OF THE INDUSTRY TOWARD A PER-CALL COMPENSATION SYSTEM.

- IPP PROVIDERS RECEIVE FLAT-RATE DIAL-AROUND COMPENSATION OF $6.00 PER PAYPHONE PER MONTH

## HOW FLAT RATE COMPENSATION IS IMPLEMENTED

- CONTRIBUTIONS TO THE $6.00 FEE ARE MADE BY IXCS WITH MORE THAN $100 MILLION TOLL REVENUES. EACH PAYS A PERCENTAGE BASED ON SHARE OF OVERALL TOLL REVENUES
- IPP PROVIDERS SUBMIT QUARTERLY BILLS TO IXCS, EITHER INDIVIDUALLY OR THROUGH A CLEARINGHOUSE (APCC HAS BIGGEST), IDENTIFYING ALL TELEPHONE NUMBERS ("ANIS") OF PAYPHONES FOR WHICH COMPENSATION IS DUE
- LECS ARE REQUIRED TO MAKE DATA ON "COCOT" LINES AVAILABLE TO IXCS TO VERIFY THAT ANIS SUBMITTED ARE ENTITLED TO COMPENSATION
- FIRST BILLS WERE FOR JUNE, 1992. SYSTEM NOW IN PLACE FOR 2 1/2 YEARS

American Public Communications Council
By: Keck, Mahin & Cate

# NEED FOR IMPROVEMENTS TO DIAL-AROUND COMPENSATION

- NEED TO MOVE TO PER-CALL COMPENSATION SYSTEM
- NEED TO INCLUDE "1-800-SUBSCRIBER" TRAFFIC

American Public Communications Council
By: Keck, Mahin & Cate

# PER-CALL COMPENSATION

- AS THE COMMISSION NOTED, FLAT RATE IS NOT OPTIMAL.

  PER-CALL COMPENSATION "WOULD HAVE THE BENEFIT OF GREATER INCENTIVES FOR PPOS TO PLACE THEIR PAYPHONES IN LOCATIONS THAT GENERATE THE MOST INTERSTATE TRAFFIC." SECOND REPORT AND ORDER, 7 FCC RCD AT 3252-53.

- FLAT RATE ALSO DOES NOT KEEP PACE WITH INCREASES IN DIAL-AROUND TRAFFIC. WITH 1-800-COLLECT, 1-800-OPERATOR, DEBIT CARDS, AND OTHER NEW FORMS OF DIAL-AROUND, $6 PER MONTH IS NO LONGER ENOUGH.

- PARTIES AGREED THAT PER-CALL SYSTEM REQUIRES NETWORK TRACKING OF DIAL-AROUND CALLS

- FCC DIRECTED STAFF TO MONITOR INDUSTRY PROGRESS TOWARD PER-CALL SYSTEM

# PER-CALL COMPENSATION
## AT&T WAIVER
## DECEMBER 29, 1994
## DA 94-1612

- APCC WAS ABLE TO WORK WITH AT&T ON IMPLEMENTING A PER-CALL SYSTEM
- ON DECEMBER 29, 1994, THE BUREAU AUTHORIZED AT&T TO PAY, AS OF JANUARY 1, 1995, COMPENSATION AT THE RATE OF .25 PER INTERSTATE ACCESS CODE CALL.
- OTHER IXCS REQUIRED TO PAY COMPENSATION ARE STILL OBLIGATED TO PAY FLAT-RATE COMPENSATION PENDING FURTHER ACTION BY THE COMMISSION.

American Public Communications Council
By: Keck, Mahin & Cate

# APCC'S PER-CALL INITIATIVE

## PETITION FOR RULEMAKING FILED JULY 19, 1994

- APCC PROPOSES TO APPLY PER-CALL COMPENSATION TO ALL MAJOR IXCS
  - TODAY, IXCS CAN TRACK MOST ACCESS CODE CALLS
  - 950 IS SHRINKING FRACTION OF DIAL-AROUND -- 5-10% AT MOST
  - NEW DIAL-AROUND SERVICES LIKE 1-800-COLLECT CAN TRACK ORIGIN OF CALLS.
- APCC PROPOSES THAT FCC ADOPT PER-CALL SYSTEM BASED ON IXC TRACKING OF 10XXX AND 1-800, SURROGATES FOR 950
- AFTER 8 MONTHS, THE COMMISSION HAS YET TO REQUEST COMMENTS ON THE PROPOSED SYSTEM

American Public Communications Council
By: Keck, Mahin & Cate

# 1-800-SUBSCRIBER COMPENSATION

- IPPs GET MORE THAN TWICE AS MUCH 1-800-SUBSCRIBER TRAFFIC AS COMPENSATED DIAL-AROUND TRAFFIC
- FCC's FIRST REPORT AND ORDER RULED THAT TOCSIA MANDATE DID NOT INCLUDE COMPENSATION FOR 1-800-SUBSCRIBER CALLS -- 1-800-SUBSCRIBER CALLS ARE NOT "ACCESS CODE" CALLS
- APCC APPEAL HAS BEEN BRIEFED AND ARGUED
- BUT FCC CAN PRESCRIBE COMPENSATION FOR 1-800-SUBSCRIBER NOW PURSUANT TO GENERAL COMMUNICATIONS ACT AUTHORITY
- 1-800-SUBSCRIBER COMPENSATION CAN BE PRESCRIBED AS PART OF EITHER FLAT-RATE OR PER-CALL SYSTEM

American Public Communications Council
By: Keck, Mahin & Cate

# COSTS

LEC SERVICES:

- DIAL TONE LINE
- LOCAL USAGE
- NETWORK FRAUD PROTECTION (BLOCKING AND SCREENING)
- LEC CHARGES = 40-70% OF COIN REVENUE

TOLL USAGE

EQUIPMENT PURCHASE

SOFTWARE UPGRADES

EQUIPMENT INSTALLATION, REPAIR AND MAINTENANCE

COIN COLLECTION

SPACE RENTAL (COMMISSIONS TO LOCATION OWNER)

REGULATORY COMPLIANCE

MARKETING

OVERHEAD