FIGURE 2-2. DOWNLINK INTERFERENCE TO 39 HYPOTHETICAL U.S. COMMON CARRIER FS SYSTEMS, 20 HOPS EACH; Noise Temp. = 850 ^{o} K

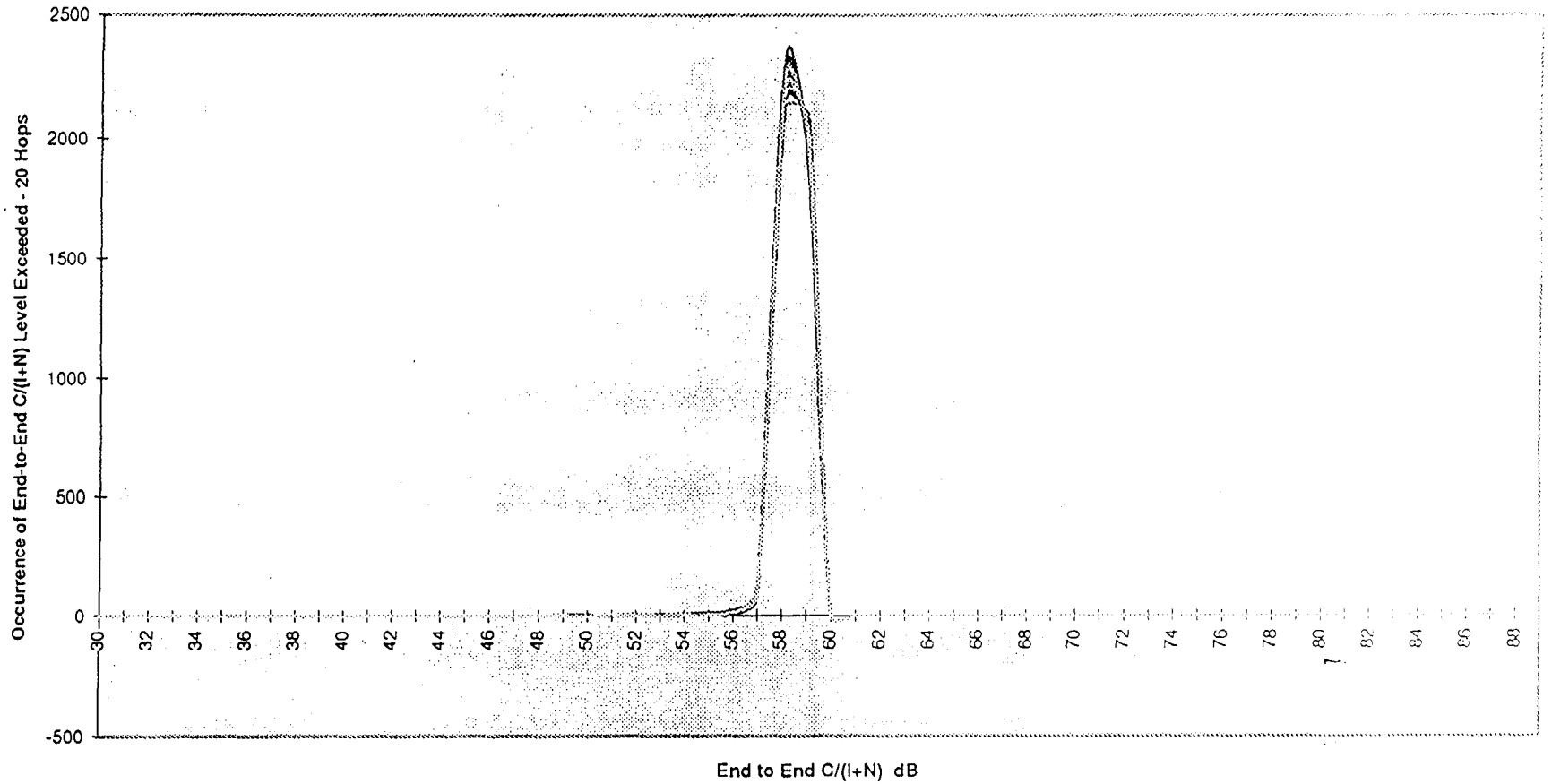

FIGURE 2-3. DOWNLINK INTERFERENCE TO 42 REAL U.S. FS POF SYSTEMS, 1 TO 3 HOPS;
Noise Temp. = 850 ^{o} K

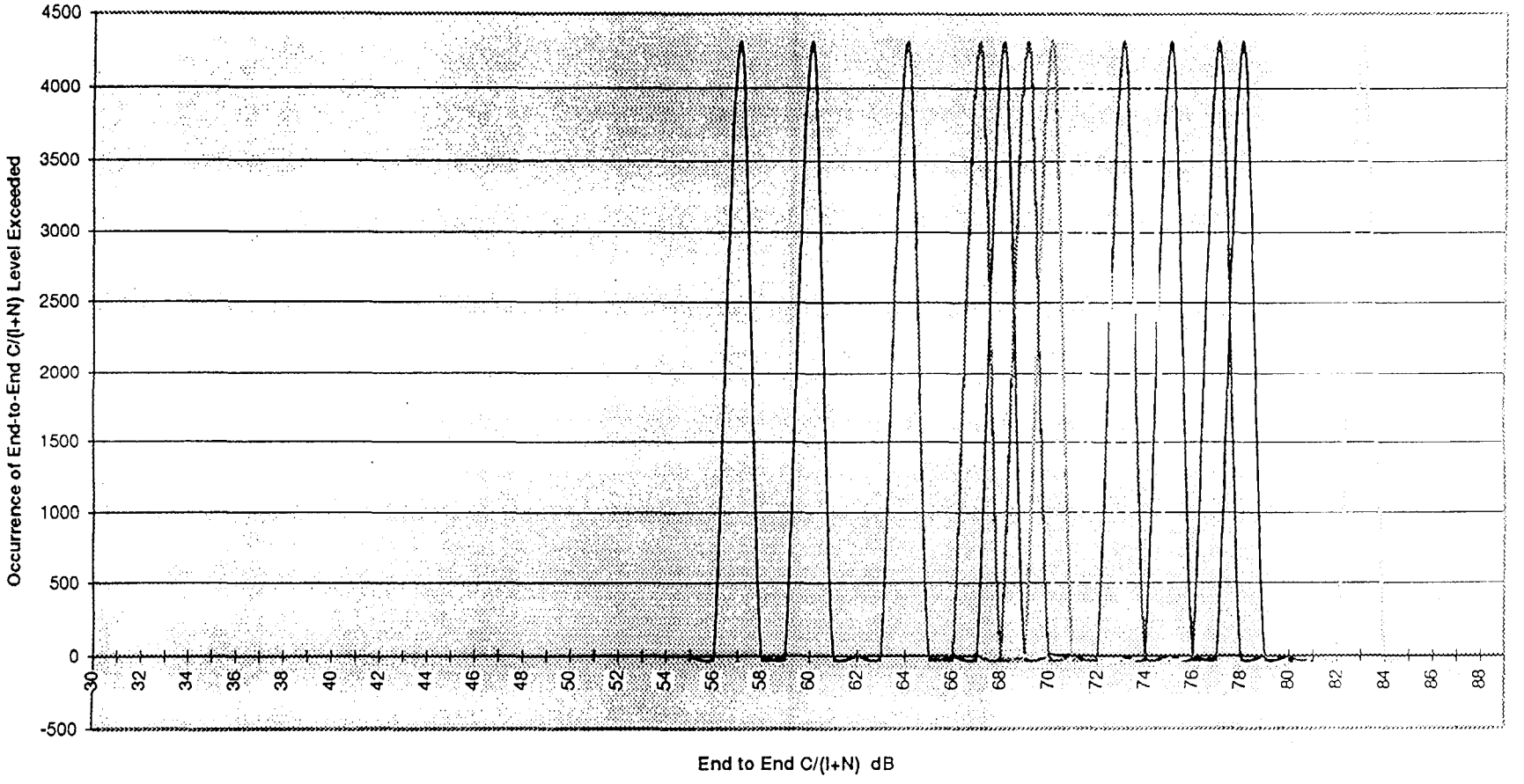

FIGURE 2-4. DOWNLINK INTERFERENCE TO 39 HYPOTHETICAL U.S. POF FS SYSTEMS, 3 HOPS EACH; Noise Temp. = 850 ^{o} K

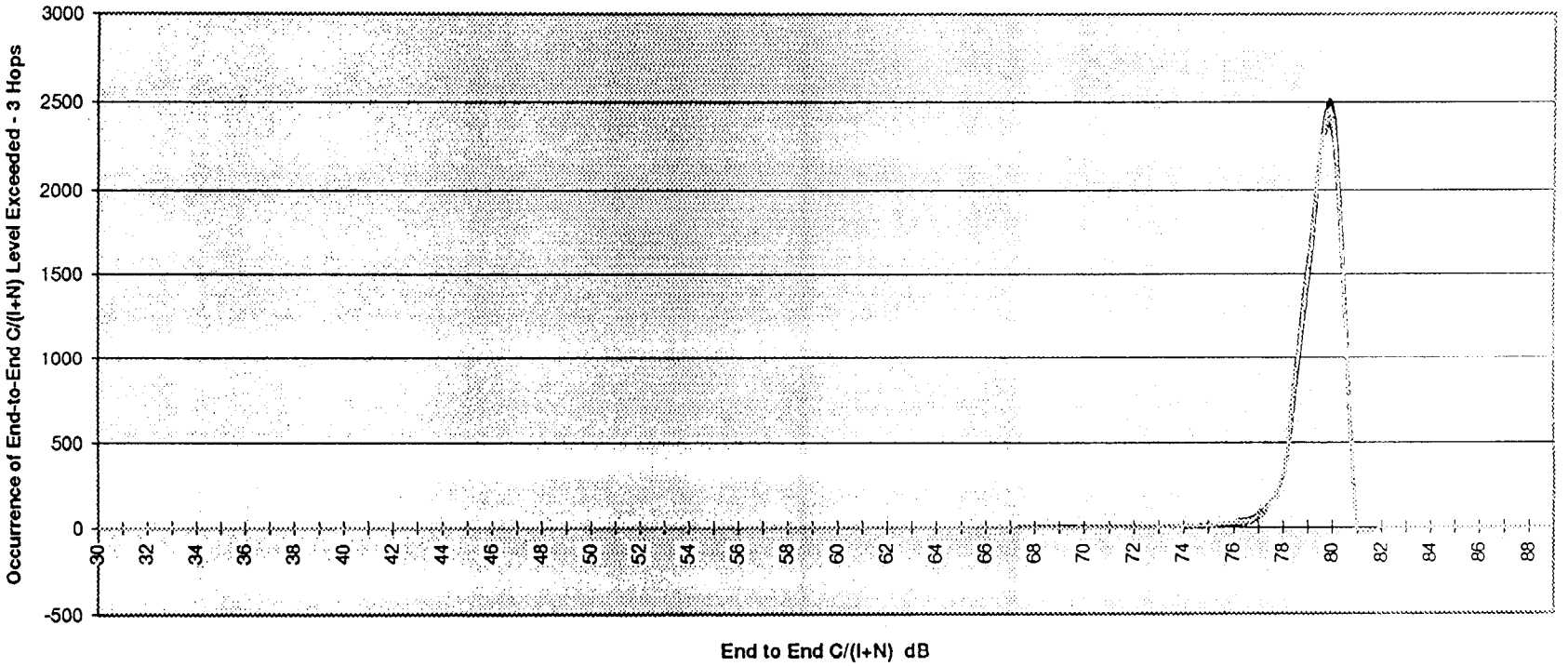

FIGURE 2-5. DOWNLINK INTERFERENCE TO 39 HYPOTHETICAL U.S. POF FS SYSTEMS, 20 HOPS EACH; Noise Temp.= 850 ^{o} K

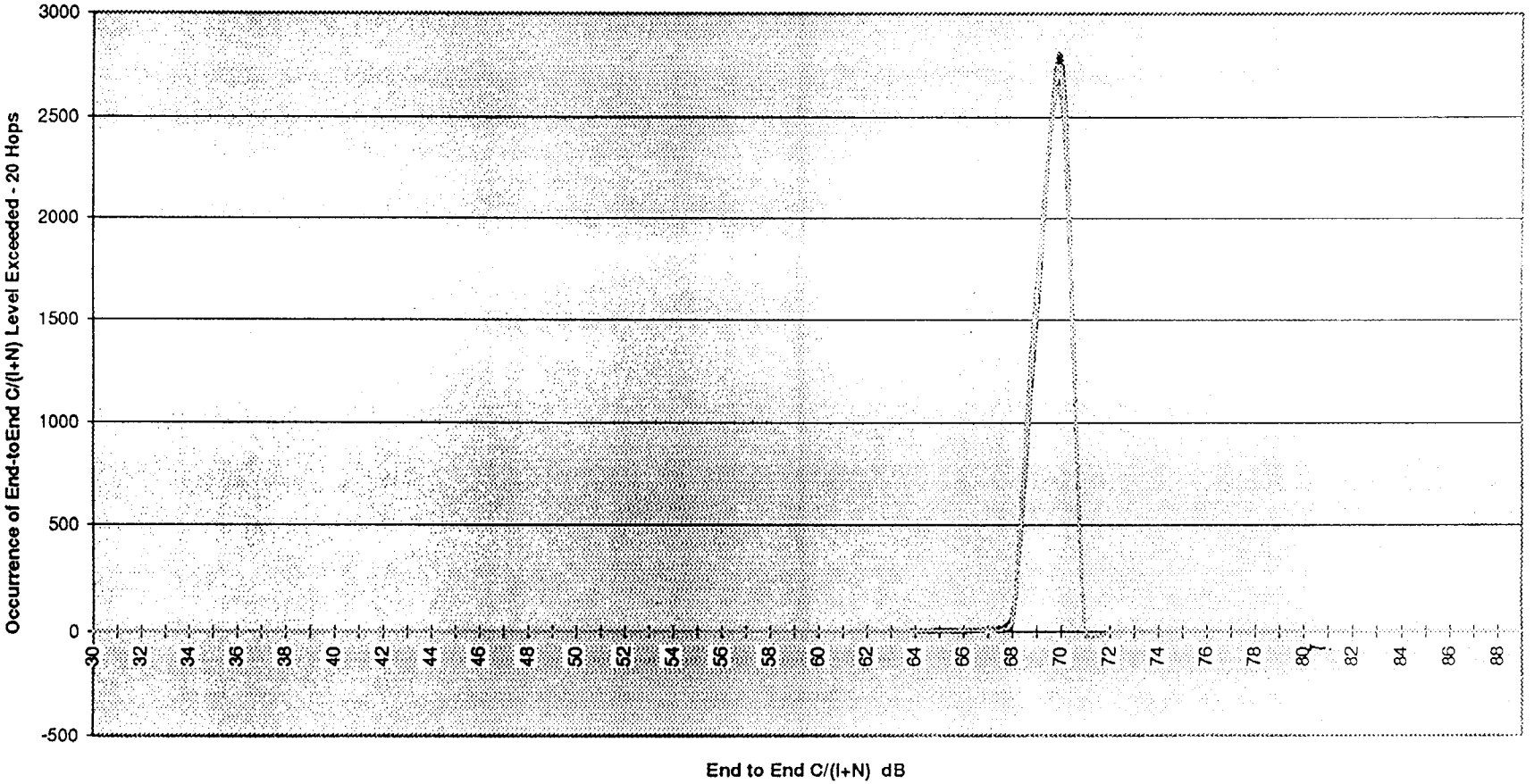

FIGURE 2-6. DOWNLINK INTERFERENCE TO 39 HYPOTHETICAL U.S. POF FS SYSTEMS, 20 HOPS EACH; Noise Temp.= 300 ^{o} K

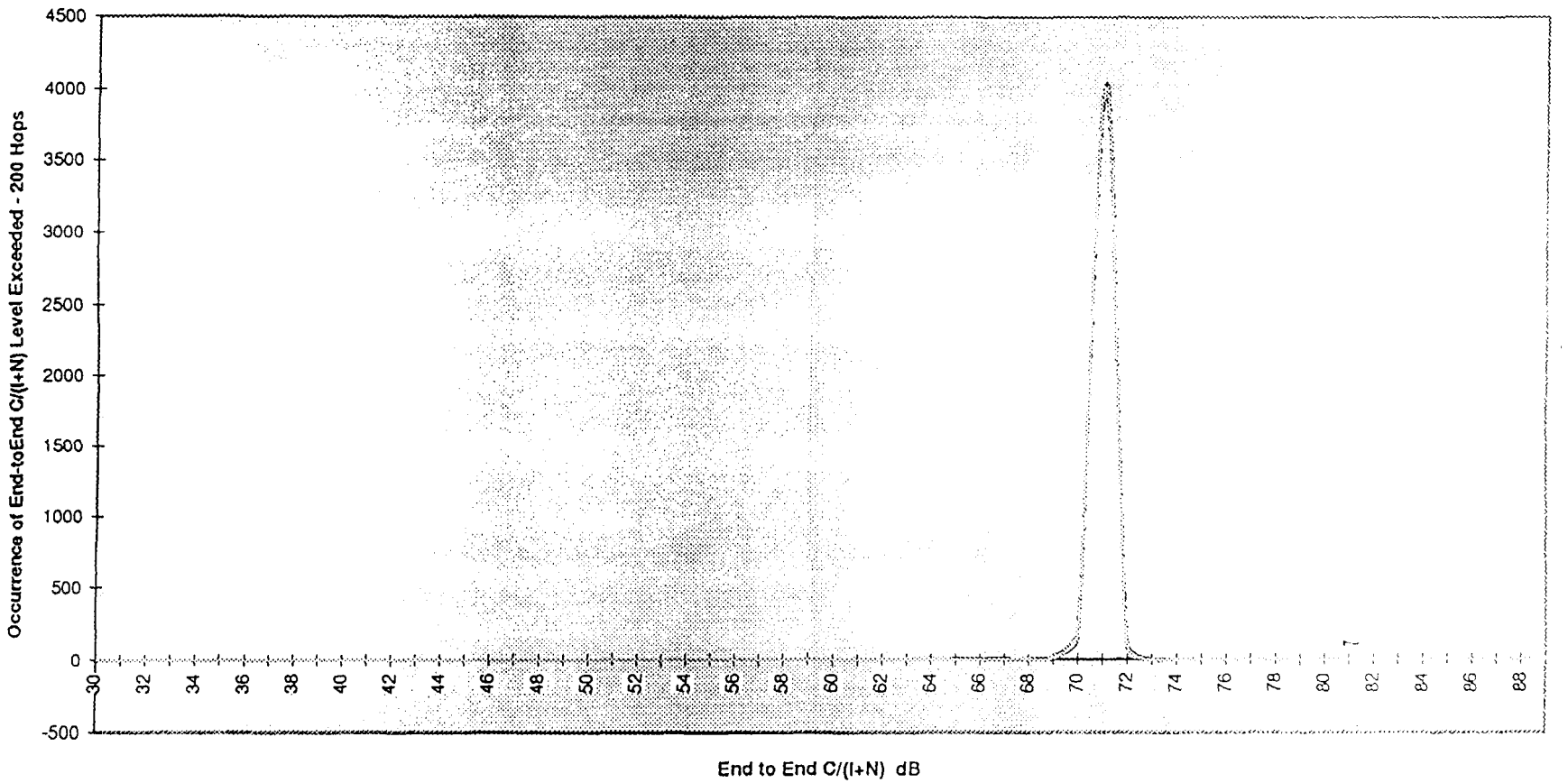

APPENDIX III

MEASUREMENTS OF VIDEO AND AUDIO QUALITY FOR BROADCAST AUXILIARY SERVICE CHANNELS WITH REDUCED BANDWIDTH

APPENDIX III

MEASUREMENTS OF VIDEO AND AUDIO QUALITY FOR BROADCAST AUXILIARY SERVICE CHANNELS WITH REDUCED BANDWIDTH

Introduction

COMSAT Mobile Communications (CMC) is acutely aware of the potential for interference from transmitting stations in the Broadcast Auxiliary Service (BAS), primarily from stations participating in Electronic News Gathering (ENG) activities, and spacecraft receivers operating in the Mobile Satellite Service (MSS) in bands that are currently jointly allocated to both Services. CMC has actively participated in the FCC Industry Advisory Committee (IAC) on the 1995 World Radio Conference (WRC'95) and its associated Informal Working Groups (IWGs). CMC has in fact led a subsidiary ad-hoc group of IWG-3 on 2 GHz Transition Plans. This ad-hoc group has considered frequency sharing issues and means that could be used to accommodate the use of common frequencies by the various services.

As a part of the deliberations by the ad-hoc group on 2 GHz Transition Plans, CMC has proposed that the lower edge of the current BAS allocation be moved from 1990 MHz to 1998 MHz. This liberation of spectrum would be made possible by decreasing the allocated channel bandwidth for each ENG carrier from either 17 or 18 MHz to 16 MHz.

The purpose of this Appendix is to report on experimental results which demonstrate that a degradation of no more than 1.4 dB in video and audio Signal-to-Noise ratio (S/N) is caused by the change in modulation parameters necessary to accommodate this new allocated channel bandwidth. The experimental method along with the results are described and the conclusion that the minimal degradation can be overcome with the use of modified existing equipment is substantiated.

Description of Experiment

Experiments were conducted at COMSAT Laboratories to determine the effects of reducing the bandwidth of the BAS channels. A reduction in bandwidth in an FM system implies a reduction in the frequency deviation, in order to still meet FCC requirements. Currently BAS systems for ENG use a peak deviation of 4 MHz. A reduction in bandwidth from 17 MHz to 16 MHz implies, according to Carson's Rule, a reduction in deviation from 4 MHz, peak, to 3.5 MHz, peak. Current operational procedures call for the use of different bandwidth receive filters in the equipment based upon the adjacent channel interference environment. BAS receivers are available with receive filter bandwidths ranging from 10 to 30 MHz in bandwidth. Receive filter bandwidths of 15 and 20 MHz were

considered in this investigation since these bandwidths are those most affected by the reduction in deviation from 4 MHz, peak, to 3.5 MHz, peak. Filters with bandwidths of 30 MHz are not used in the USA and filters with only 10 MHz of bandwidth allow only the use of one audio sub-carrier and thus would be used only under the most adverse terrestrial interference conditions.

Consistent with the above, measurements of video and audio signal characteristics were made at both deviations and the differences were recorded.

A block diagram of the experimental setup is shown in Figure III-1. Referring to that Figure, a video baseband signal was created by a Video Generator. This signal was combined with two audio sub-carrier signals. These audio sub-carriers were generated at frequencies that are dependent upon the bandwidth utilized. The greater of the two frequencies were used with a 20 MHz receive filter and the smaller of the two frequencies were used with a 15 MHz receive filter. For example, with a 20 MHz receive filter, audio sub-carrier frequencies of 6.6 and 8.3 MHz were used. For a receive filter bandwidth of 15 MHz, audio sub-carrier frequencies of 5.8 and 6.8 MHz were used.

After the combination of the video baseband signal and the audio sub-carriers, the composite signal was pre-emphasized according the ITU-R Recommendation 405 and this signal was input to an FM modulator. The signal level into the FM modulator was adjusted to provide the correct video deviation of 3.5 or 4 MHz, peak. The injection level of the audio sub-carriers was set at 17 dB to reflect the maximum allowable sub-carrier injection level. The FM modulated signal at 70 MHz was filtered by a 20 MHz filter to eliminate out-of-band signal components. This signal was then combined with Gaussian noise to simulate a typical link. The signal plus noise was passed through a bandpass filter with either 15 of 20 MHz bandwidth and then input to an FM demodulator. The levels of the signal and noise were monitored at the output of the bandpass filter in order to maintain a Carrier-to-Noise Density ratio (C/N_O) of 102.7 dB at the input of the FM demodulator. This C/N_O corresponds to a Carrier-to-Noise ratio of 30 dB which is typical for ENG links.

The output of the FM demodulator was amplified, de-emphasized and split to allow analysis of the video and audio components. The video portion of the signal was fed to a Tektronix VM 700A Video Analyzer and the audio portion was fed to a frequency converter system and a sub-carrier demodulator. The output of the sub-carrier demodulator was fed to an audio analyzer for measurement of the Signal-to-Noise ratio (S/N) and harmonic distortion. The frequency conversion system was required to convert the 8.3 MHz audio sub-carrier frequency to the sub-carrier demodulator input frequency of 6.8 MHz. This was necessary since only a 6.8 MHz sub-carrier demodulator was

available. Only the higher frequency audio sub-carrier was analyzed since this is the one that would experience the greatest amount of degradation.

The Tektronix VM 700A Video Analyzer performs a myriad of complex video tests automatically. This instrument is recognized as a standard by the television industry and is valued for the consistency it provides in video testing. This instrument was used to make all of the video performance measurements reported here.

Experimental Results

This section presents the results of the experimental investigation for a C/N_O of 102.7 dB, receiver bandwidths of 20 and 15 MHz, and video deviations of 4.0 and 3.5 MHz. It is important to keep in mind that the absolute values of the audio and video parameters are not as important as the difference between the values for the deviations of 4.0 and 3.5 MHz.

Table I indicates the video performance, for a representative set of parameters at the de-emphasized output of the FM demodulator. Note that there was little difference between the values for the 4.0 and 3.5 MHz deviations for reception through the 20 MHz filter while for reception through the 15 MHz filter, the performance for 3.5 MHz deviation is slightly better than that for 4.0 MHz deviation. This is to be expected as reception through the narrower 15 MHz filter results in the signal being "over deviated" as compared to the Carson's Rule bandwidth.

TABLE I

Video Performance

Video Parameter	20 MHz Filter 4.0 MHz Δf	20 MHz Filter 3.5 MHz Δf	15 MHz Filter 4.0 MHz Δf	15 MHz Filter 3.5 MHz Δf
Amplitude Response	<1.8 IRE p-p	<1.4 IRE p-p	<1.3 IRE p-p	<1.9 IRE p-p
Chrominance/ Luminance Gain	101.2%	101.3%	96.9%	97.4%
Chrominance/ Luminance Delay	8.2 nS	9.3 nS	9.1 nS	9.4 nS
Field Time Distortion	2.1%	2.1%	2.4%	2.2%
Line Time Distortion	2.1%	2.1%	1.6%	2.0%
Short Time Distortion	0.9%	1.0%	1.1%	0.9%
Luminance Non-Linearity	0.45%	0.74%	0.27%	0.65%
Differential Gain	1.05%	0.86%	1.06%	1.23%
Differential Phase	0.48°	0.39°	0.82°	0.53°
Chrominance/Luminance Intermodulation	0.1 IRE	0.1 IRE	0.1 IRE	0.1 IRE
Chrominance Non-Linear Gain	0+0.1 IRE	0 IRE	-0.2-1.5 IRE	+0.1-1.0 IRE
Chrominance Non-Linear Phase	0.3°	0.3°	0.3°	0.1°

With the exception of the Line Time performance, all of the video performance values measured are within the Medium Haul performance specifications of EIA Standard RS-250C. These measurements indicate that the video performance will not be significantly affected by the ENG channel bandwidth reduction proposed by COMSAT Mobile Communications.

The video S/N, audio S/N and audio distortion values are shown in accompanying Table II as a function of video deviation for reception through 20 and 15 MHz receive bandwidths.

TABLE II

Video and Audio Noise Performance

	C/N_O= 102.7dB					
	Rx BW= 20 MHz			RX BW= 15 MHz		
	Audio1= 8.3 MHz	Audio2= 6.8 MHz		Audio1= 6.8 MHz	Audio2= 5.8 MHz	
	Video S/N	Audio S/N	Audio Dist.	Video S/N	Audio S/N	Audio Dist.
Δf=4.0 MHz	56.5 dB	49.4 dB	0.72%	56.5 dB	49.6 dB	0.72%
Δf=3.5 MHz	55.0 dB	48.6 dB	0.74%	55.1 dB	49.7 dB	0.72%

The theoretical video Signal-to-Noise ratio (S/N_{vid}) is given by the following formula:

$$S/N_{vid} = 6 * C/N_o * (\Delta f/f_m)^2 * 1/f_v * Q$$

where: C/N_o = Carrier-to-Noise Density ratio

Δf = Peak Frequency Deviation

f_m = Maximum Baseband Frequency, 5.0 MHz

f_v = Video Bandwidth, 5.0 MHz (Unified Weighting)

Q = Pre-emphasis and Noise Weighting Factor, 14.8 dB.

The use of this formula predicts a theoretical video S/N of 56.4 dB for 4 MHz deviation and a value of 55.2 dB for a deviation of 3.5 MHz which agree very well with the values measured. The slightly better than theoretical results shown for transmission through the 20 MHz filter can be attributed to equipment tolerances and irreducible measurement errors.

The theoretical value of audio Signal-to-Noise ratio (S/N_{aud}) is given by the following formula:

$$S/N_{aud} = 3/4 * C/N_o * 1/f_a * (\Delta F_a/f_{sc})^2 * (\Delta F_{sc}/f_a)^2 * P_1$$

where: f_a = Audio Baseband Bandwidth, 15 kHz

ΔF_a = Peak Carrier Deviation due to Sub-carrier, -17 dB referenced to peak-to-peak video

f_{sc} = Sub-carrier Frequency, 8.3 or 6.8 MHz

ΔF_{sc} = Peak Sub-carrier Deviation, 75 kHz

P_1 = Wideband Pre-emphasis Improvement at Sub-carrier Frequency, 3.5 dB

The use of this formula predicts a theoretical audio S/N of 53.9 dB for transmission through the 20 MHz filter with 4 MHz deviation and 52.7 dB for 3.5 MHz deviation. For transmission through the 15 MHz filter the measured audio sub-carrier frequency was 6.8 MHz and a theoretical S/N of 55.6 dB was computed for 4 MHz deviation and a value of 54.4 dB was computed for 3.5 MHz deviation. The measured values are on the order of 5 dB lower than that predicted theoretically. Examination of the received IF spectrum indicated that the sub-carriers were being truncated and reduced in level by the receive IF filter. This truncation occurs in normal operation and is in no way associated with the reduced deviation being addressed in this Appendix. Taking this factor into account yielded measured S/Ns that were on the order of 1.5 dB less than theory.

Conclusions

This experimental investigation has demonstrated that it is possible to utilize reduced bandwidth channels for the Broadcast Auxiliary Service with a minimal effect, that is a 1.4 dB reduction in Signal-to-Noise ratio, on video and audio quality. The subjective impairment due to the reduced bandwidth operation will be negligible and in many instances will be indistinguishable from normal apparatus noise. In actual operation, it is expected that Electronic News Gathering transmitters are run at the maximum allowable power output so that a 1.4 dB reduction in S/N will be all but unnoticeable for the majority of links.

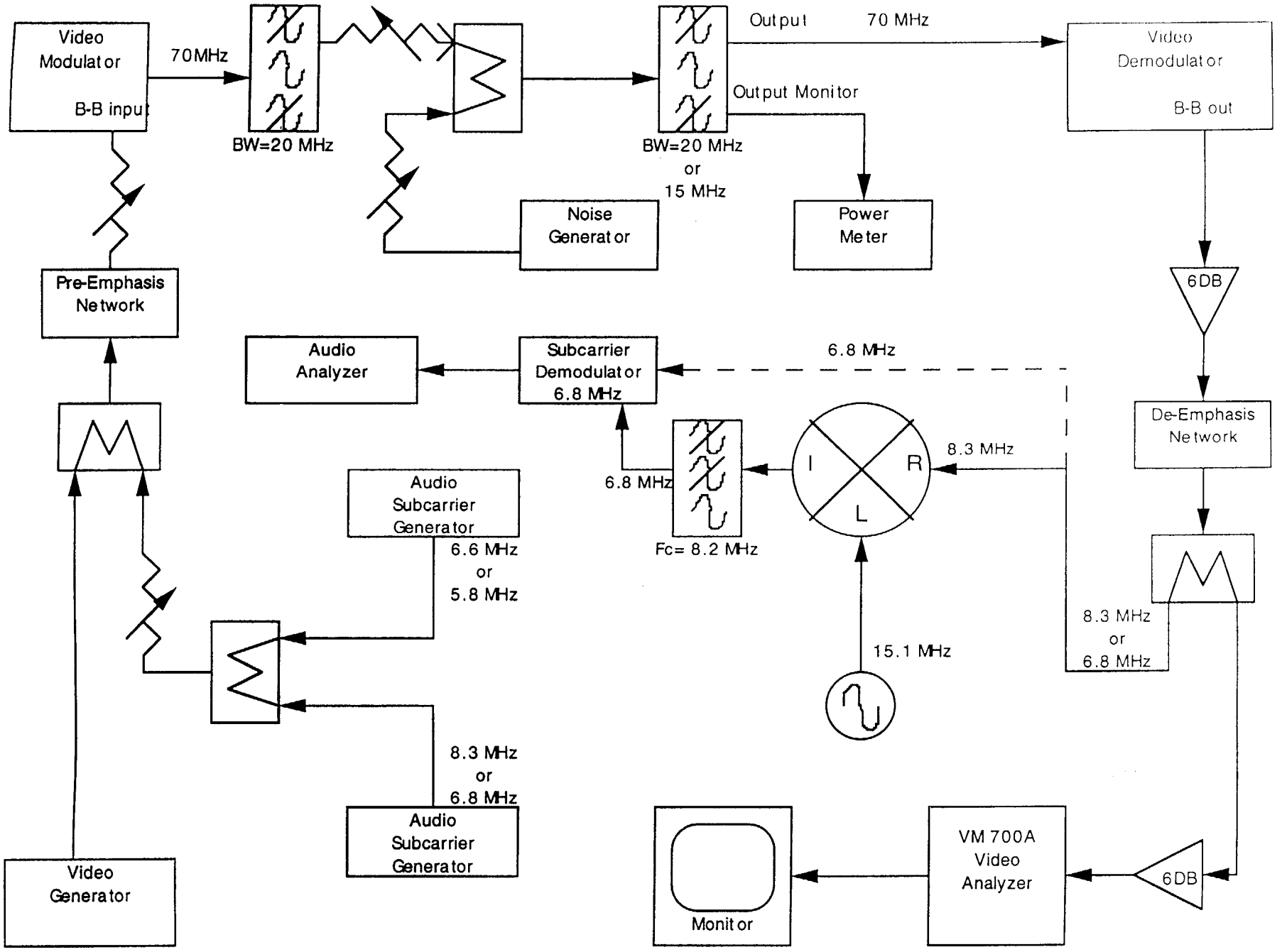

Figure III-1 Experimental Test Setup

AFFIDAVIT

I hereby certify that I am the technically qualified person responsible for the preparation of the engineering information contained in the Appendices, that I am familiar with Parts 21, 25 and 74 of the Commission's Rules as well as with the technical characteristics of the radiocommunications systems described in the Appendices, that I have either prepared or reviewed the engineering information submitted in the Appendices, and that it is complete and accurate to the best of my knowledge and belief.

Jeffrey B. Binckes

Date: May 5, 1995