EX PARTE OR LATE FILED

MAY 3 0 1995

DONELAN, CLEARY, WOOD & MASER, P.C.

ATTORNEYS AND COUNSELORS AT LAW
SUITE 750
1100 NEW YORK AVENUE, N.W.
WASHINGTON, D.C. 20005-3934

OFFICE: (202) 371-9500

TELECOPIER: (202) 371-0900

DOCKET FILE COPY ORIGINAL

May 31, 1995

Secretary
Federal Communications Commission
Washington, D.C. 20554

Re: CC Docket 94-102, E9-1-1 compatibility, MLTS and wireless telephones

Dear Mr. Secretary:

Enclosed for the record of the referenced docket, pursuant to Section 1.1206 of the rules, are an original and two copies of a presentation today to Alan Thomas, made on behalf of the National Emergency Number Association (NENA). Please direct any questions to the undersigned.

Sincerely,

James R. Hobson

cc: William E. Stanton
NENA Executive Director

No. of Copies rec'd 0+1
List A B C D E

DONELAN, CLEARY, WOOD & MASER, P.C.

May 31, 1995

Alan Thomas
FCC/CCB, Room 6338
2025 M Street N.W.
Washington, D.C. 20554

Re: CC Docket 94-102, E9-1-1 compatibility, MLTS/wireless

Dear Alan:

Enclosed for your information are *NENA News* articles from the issues of March and June 1995, selected for their relevance to the subject docket proceeding.

In the March issue, "Technological Innovation for E9-1-1 Services" contains brief discussions of "new dial tone providers," PS (private switch) ALI and map and cell ALI. From the same issue, California's experience with legislation to mandate "graphic" ALI based on latitude, longitude and elevation is discussed by a telephone company 9-1-1 executive, "In Support of a National Standard: The 9-1-1 Technology Dilemma."

In the June issue, two state 9-1-1 executives recount the differing approaches of Rhode Island and New Jersey to the routing of calls from cellular telephones.

This letter and its attachments are being supplied to the Secretary for placement on the docket record, pursuant to Section 1.1206 of the Commission's rules.

Sincerely,

James R. Hobson

Technological Innovation for E9-1-1 Services

by George Heinrichs

Telecommunications and E9-1-1 technology is becoming more sophisticated. Consequently, the demand for new products and services to take advantage of that technology is growing. Many companies are stepping forward to take a proactive response to these demands. SCC Communications is one of those companies. With the establishment of a National Data Services Center (NDSC) in Boulder, Colorado, SCC has set the stage to provide E9-1-1 infrastructure and data base services to large telephone service providers, independent telephone companies, public safety agencies and wireless communication companies throughout North America. The following article highlights some of the innovative ways SCC is using technology to provide new, faster and innovative services.

New Products Demands and New Dial Tone Providers

With the addition of many new "dial tone" providers in major markets, the provisioning of E9-1-1 data services is becoming increasingly complex. SCC's response is a single data repository and related services provided by an objective, non-competitive third party. The SCC NDSC provides system support for MSAG maintenance, graphic MSAG support, ALI file maintenance, single point PSAP contact, network switching updates, etc. from multiple sources, while providing a single point of contact for MSAG maintenance, ALI database support and other E9-1-1 infrastructure services.

Basic Services Provided

As telephone service orders are placed by the general public, the information is transmitted via high speed links to the NDSC. Automated processes validate the address and proper planned routing of E9-1-1 calls originating from the new or changed phone. Successful updates are transmitted to a distributed network of Tandem Computers' fault tolerant ALI high speed display nodes distributed throughout the service area. New call routing information is also delivered to the appropriate control switches in the E9-1-1 voice network. The NDSC supports a wide variety of E9-1-1 switching systems (including the AT&T 1A®, 5ESS®, NTI DMS-100™, Stromberg Carlson, Ericsson, Rockwell, Summa Four, etc.)

New service records or change orders which are believed to be in error are researched by NDSC analysts, and are resolved through a cooperative effort involving NDSC analysts, the telephone service provider, and appropriate PSAP coordinator for inclusion in the E9-1-1 system. NDSC analysts also provide support for the creation and maintenance of MSAGs in cooperation with local jurisdiction coordinators and telephone service providers.

Expanded Service Offerings

A number of non-traditional E9-1-1 service offerings are also available via the center. These options may be selected either by the telephone service provider or the public safety agency. Some of the optional products may require companion enhancements to the voice network or its components. These are provided by the local or cellular telephone service company.

On-line Access

Agency 9-1-1 coordinators may connect to the NDSC via a secured dial-up link to view data service request errors, MSAG changes, etc. for their jurisdiction. This system also supports file transfer and E-mail messaging to coordinate with NDSC analyst staff.

PS/ALI

A system to allow private switch/PBX users to enter and maintain their ALI data for telephone service locations not "known" to the telephone service provider is also available. This system supports full MSAG coordination of ALI data so that appropriate routing information can be maintained in the E9-1-1 system.

Subscriber ALI

At the discretion of the public safety agencies and the telephone service provider, an additional seven digit phone number can be activated for a service area which allows citizens to add language preference and special medical or other hazard flags to their E9-1-1 record.

SR/ALI

The NDSC ALI distributed nodes also operate directly connected to large tandem class control switches (5ESS) as adjunct processors, providing high speed call control for E9-1-1 calls.

Graphic MSAG Maintenance

The NDSC supports the capture and maintenance of MSAG information using advanced mapping technology. Information may be captured in a number of different formats and then maintained by the NDSC or by the agency coordinator using graphic mapping technology. These systems support the delivery of E9-1-1 service to areas without traditional addressing, but where the location of phone service can be determined by other means.

Map ALI

Once users have chosen to build a map data base for their E9-1-1 system, they may optionally activate a tactical map display at the call taker position which displays the location of the caller. This graphic map system is particularly useful in areas without addressing.

Cell ALI

This system provides support to the PSAP for the receipt of E9-1-1 calls from wireless phone systems. The Cell ALI system will generate a computerized map display of the approximate location of a caller initiating a 9-1-1 call from a properly equipped cellular phone system.

Information Products

Expanded information products are also available from the NDSC. These include MSAG exports in many different formats and on different media types for use in other systems. On a subscription basis the NDSC also offers daily, weekly, and monthly statistical summaries, CD ROM-based ALI history archive, color pin map reporting of E9-1-1 call activity, and many others.

Stringent Performance Metrics

The key to success of an operation of this kind is the application of stringent performance metrics. All of the key operations of the center are measured using "primary metrics." Examples of these metrics include the average, maximum and minimum posting delay upon receipt of a service order. The NDSC commitment is to post all on-line (SIP) incoming service

(continued on page 26)

played at the public safety agency, and Automatic Location Information (ALI) so that the address of the caller is also displayed at the public safety agency. AB2455 sought to alter the definition of E9-1-1 to read, Selective Routing, ANI and Graphic ALI.

With that change in definition, public policy would have required enhancement of the California 9-1-1 infrastructure which is fully supported by the collection of a special surcharge on telecommunications. The tabular data bases in the local exchange companies would have been converted to graphic files based on GPS (Global Positioning System) standards. In this context, addresses would be assigned a Universal Address based on the GPS location convention (24 character latitude, longitude, and elevation). This address or location would then be displayed on a mapped image as an icon at the X-Y coordinates. [Importantly, the Universal Address is based on the GPS data convention for addressing and not the specific GPS technology for transmitting location data.]

The display of graphic data would require a change in the display screens at the Public Safety Answering Point (PSAP) as today's LED and ELD screens are not appropriate for full graphic displays of mapped images. The solution is an intelligent workstation consisting of networked 486 PCs with a Windows or NT type operating system on which various workstation screens at the PSAP could be consolidated as well as accommodate the mapped ALI. In this scenario, the mapped images are resident on the PSAP system with periodic image updates from a master network file and thus do not require massive bandwidth in the transport medium.

This was the simple strategy of AB2455, to create a standard applicable to all forms of 9-1-1: optimize resources; modernize PSAP telecommunication and data display equipment; and, minimize the proliferation of multiple PSAP terminals.

A Standard We Can Live With

With an enriched infrastructure such as this, wireless location data could be displayed on PSAP workstations just as is existing wireline ALI. Additional subscriber information or data could also be provided in a display window meeting the individual carrier's specifications or other industry standard.

Considering one of every five Americans live in California, such a significant retrofit of the California 9-1-1 system would have had a tremendous leadership impact to the entire 9-1-1 industry. It would have put in place the infrastructure to allow all the various wireless carriers to provide location information using any technology appropriate to their business objectives. Equally important, the PSAP would receive 9-1-1 data in a common manner and be able to formulate an emergency response to calls in a standard fashion.

This Was Not To Be

The failure of our initial attempt in California was due to a number of failures and inadequacies. The bill failed due to lack of industry support in an era of scarce financial resources. Even though our 9-1-1 fund yields a surplus to the State General Fund annually, there was not enough public safety support for the bill to survive. As was expected, the politics within the State Legislature were gruesome. Not expected was the seeming lack of concern and industry support from our profession.

There are at least three reasons why this could have occurred: it was bad public

Technological Innovation for E 9-1-1 Services (continued from page 9)

orders to the live E9-1-1 network within three hours of receipt of the information. Additional metrics include ALI response time (2 seconds or less; our average is .79 seconds), customer (PSAP) affecting down time, customer satisfaction on MSAG and general data base maintenance. Secondary metrics include such items as ALI No Record Found research and resolution, default routing research, etc.

These performance metrics are communicated on a daily basis to customers using a highly secure Lotus Notes® based data distribution system. This allows clients to observe the daily results of the NDSC operation for their customers or the public. Both the NDSC and NDSC customers have a commitment to continual process improvement, monitoring all operational metrics and working to improve E9-1-1 infrastructure operations. A full time metrics officer is responsible for calculating and reporting all NDSC metrics and their trends.

Aggressive Database Reconciliation (RECON)

The NDSC operates an aggressive program of data RECON or reconciliation to check E9-1-1 telephone and routing information against other data sources to find errors in the source data bases. These processes are highly automated systems which search for anomalies in the data by comparing E9-1-1 information automatically to other telephone service company and jurisdiction provided information. The suspect information is then managed through a RECON research queue process.

Survivability

Based on Tandem Computers' fault tolerant systems, deployed in a "fail safe" geographically distributed configuration, the NDSC network and distributed systems are designed to continue to support E9-1-1 operations even though single processing sites may be totally destroyed or incapacitated. Network operations are provided via dedicated high speed links using different long haul carriers, switched high speed back-up links, and finally using VSAT satellite technology to avoid terrestrial connections in the event of massive failure of the national long haul network systems. In the event of complete failure of all data support systems and all levels of backup, the voice network is designed to continue to deliver E9-1-1 calls.

Security

NDSC data system security meets the demanding standards of both the regulatory and operational arenas worlds of E9-1-1. Comprehensive security systems and practices are in place to protect the integrity of the systems and the confidentiality of the information.

Economic Business Model

A natural result of the network-based services offering is that public safety agencies and telephone service providers using the system do not have to purchase up front licenses or invest in large hardware systems. Transactions are priced on a pennies per line per month basis. Using this model, transition from old or inadequate systems can be achieved without large capital investment.

For More Information

For additional information on SCC or the National Data Services Center, please contact SCC Communications at (303) 581-5600. Tours of the NDSC may be scheduled by contacting Mr. Mark Kulaga, Manager of Marketing Communications, at (303) 581-5600. Tours require advance scheduling and completion of a security form and associated clearance waiver.

In Support of a National Standard: The 9-1-1 Technology Dilemma

> ***"... people are arming themselves with their own weapons to fight crime and insure their personal safety."***

by W. Clay Paxton

Crime and public safety are the biggest national concerns in America. The communist threat, illegal immigration, education and even our national economy have taken a back seat to individual fears about personal safety and the perceived growth of crime in our communities.

Pressed by this concern, national and state legislators are moving with a high level of public debate and visibility in enacting public policy measures such as "Three Strikes," new prison construction, and the National Crime Bill. The number of local measures to enhance law enforcement and public safety are at an all time high. And, as we are all aware, the level of press coverage and media coverage are consistent with heightened concerns about public safety.

Individually, people are arming themselves with their own weapons to fight crime and insure their personal safety: alarm systems, subscription to security services, community alert programs, gun purchases, and in ever growing numbers, cellular telephones.

The Wireless Influence

Cellular telephones represent the first significant adaptation of wireless telecommunications technology to personal safety. Recent industry studies reflect phenomenal growth in cellular sales with usage nearly doubling about every 18 months and 2 of every 3 new telephone numbers being assigned to cellular phones. There are currently more than 21 million cellular phones in service, up from 11 million at the start of 1993. The Yankee Group, as quoted in *USA Today*, claim that their studies indicate 46% of new users cite personal security and safety as the number one reason for the new purchase.

Nationwide in 1993, there were about 6.5 million calls to 9-1-1 using cellular phones, about 150,000 per month in California alone. Because cellular 9-1-1 calls do not provide telephone number and location data as wireline calls do, they are typically routed to a default agency such as the highway patrol or state police, based on local operating agreements. The rapidly increasing cellular call volumes are having a crippling affect on these default agencies and traditional technology and personnel augmentation are offering little relief.

Additionally, in many emergencies, the default agencies are not the appropriate initial response agencies for medical emergencies or criminal activity and must relay the request to the appropriate response provider. PCS and other wireless technologies are expected to exacerbate this critical situation.

9-1-1 is a Telephone Company System

Our superb 9-1-1 systems are taken for granted by many, including ourselves. The expectation is that new technologies and telecommunications carriers are simply incorporated into the existing 9-1-1 system. What is often little understood is that 9-1-1 is a basic exchange service of the local telephone company, e.g. a "dial tone" service such as 'O' Operator, directory assistance and 6-1-1 repair. Therefore, the dial tone provider also provides the 9-1-1 service.

Cellular carriers typically use a call processing convention similar to a speed-call feature. That is, when 9-1-1 is dialed, the cellular switch receives the numbers, converts them to a standard 7-digit telephone number and sends the call over the public switched network to a default PSAP.

California law requires that all 9-1-1 systems in the state provide the feature/functionality of Enhanced 9-1-1. Since cellular does not have a 9-1-1 system, per se, they are exempted from this requirement. Likewise, others who might provide dial tone such as cable operators and alternate service providers are also exempt.

The Federal Response

On September 19, 1994, the FCC initiated a Notice of Proposed Rulemaking (NPRM) to ensure that wireless telephone users have access to 9-1-1 emergency services comparable to those currently available to users of the wireline telephone network. In a unanimous vote of the Commission, Chairman Hundt said, "There will be a lot of ways telephone calls are made in the future and everyone involved should be mandated to meet certain public health and safety considerations. [This NPRM action is a] perfect example of the role government should have in encouraging competition while setting rules to protect the public."

The California Approach

In the 1994 California legislative session, Assembly Bill 2455 (AB2455) was introduced by Assemblyman Bob Epple. E9-1-1 is distinguished from other 9-1-1 systems in that it provides Selective Routing (SR) so that the call is electronically routed to the appropriate public safety agency based on the location of the caller, Automatic Number Identification (ANI) so that the caller's telephone number is dis-

played at the public safety agency, and Automatic Location Information (ALI) so that the address of the caller is also displayed at the public safety agency. AB2455 sought to alter the definition of E9-1-1 to read, Selective Routing, ANI and Graphic ALI.

With that change in definition, public policy would have required enhancement of the California 9-1-1 infrastructure which is fully supported by the collection of a special surcharge on telecommunications. The tabular data bases in the local exchange companies would have been converted to graphic files based on GPS (Global Positioning System) standards. In this context, addresses would be assigned a Universal Address based on the GPS location convention (24 character latitude, longitude, and elevation). This address or location would then be displayed on a mapped image as an icon at the X-Y coordinates. [Importantly, the Universal Address is based on the GPS data convention for addressing and not the specific GPS technology for transmitting location data.]

The display of graphic data would require a change in the display screens at the Public Safety Answering Point (PSAP) as today's LED and ELD screens are not appropriate for full graphic displays of mapped images. The solution is an intelligent workstation consisting of networked 486 PC's with a Windows or NT type operating system on which various workstation screens at the PSAP could be consolidated as well as accommodate the mapped ALI. In this scenario, the mapped images are resident on the PSAP system with periodic image updates from a master network file and thus do not require massive bandwidth in the transport medium.

This was the simple strategy of AB2455, to create a standard applicable to all forms of 9-1-1: optimize resources; modernize PSAP telecommunication and data display equipment; and, minimize the proliferation of multiple PSAP terminals.

A Standard We Can Live With

With an enriched infrastructure such as this, wireless location data could be displayed on PSAP workstations just as is existing wireline ALI. Additional subscriber information or data could also be provided in a display window meeting the individual carrier's specifications or other industry standard.

Considering one of every five Americans live in California, such a significant retrofit of the California 9-1-1 system would have had a tremendous leadership impact to the entire 9-1-1 industry. It would have put in place the infrastructure to allow all the various wireless carriers to provide location information using any technology appropriate to their business objectives. Equally important, the PSAP would receive 9-1-1 data in a common manner and be able to formulate an emergency response to calls in a standard fashion.

This Was Not To Be

The failure of our initial attempt in California was due to a number of failures and inadequacies. The bill failed due to lack of industry support in an era of scarce financial resources. Even though our 9-1-1 fund yields a surplus to the State General Fund annually, there was not enough public safety support for the bill to survive. As was expected, the politics within the State Legislature were gruesome. Not expected was the seeming lack of concern and industry support from our profession.

There are at least three reasons why this could have occurred: it was bad public

Technological Innovation for E 9-1-1 Services (continued from page 9)

orders to the live E9-1-1 network within three hours of receipt of the information. Additional metrics include ALI response time (2 seconds or less; our average is .79 seconds), customer (PSAP) affecting down time, customer satisfaction on MSAG and general data base maintenance. Secondary metrics include such items as ALI No Record Found research and resolution, default routing research, etc.

These performance metrics are communicated on a daily basis to customers using a highly secure Lotus Notes® based data distribution system. This allows clients to observe the daily results of the NDSC operation for their customers or the public. Both the NDSC and NDSC customers have a commitment to continual process improvement, monitoring all operational metrics and working to improve E9-1-1 infrastructure operations. A full time metrics officer is responsible for calculating and reporting all NDSC metrics and their trends.

Aggressive Database Reconciliation (RECON)

The NDSC operates an aggressive program of data RECON or reconciliation to check E9-1-1 telephone and routing information against other data sources to find errors in the source data bases. These processes are highly automated systems which search for anomalies in the data by comparing E9-1-1 information automatically to other telephone service company and jurisdiction provided information. The suspect information is then managed through a RECON research queue process.

Survivability

Based on Tandem Computers' fault tolerant systems, deployed in a "fail safe" geographically distributed configuration, the NDSC network and distributed systems are designed to continue to support E9-1-1 operations even though single processing sites may be totally destroyed or incapacitated. Network operations are provided via dedicated high speed links using different long haul carriers, switched high speed back-up links, and finally using VSAT satellite technology to avoid terrestrial connections in the event of massive failure of the national long haul network systems. In the event of complete failure of all data support systems and all levels of backup, the voice network is designed to continue to deliver E9-1-1 calls.

Security

NDSC data system security meets the demanding standards of both the regulatory and operational arenas worlds of E9-1-1. Comprehensive security systems and practices are in place to protect the integrity of the systems and the confidentiality of the information.

Economic Business Model

A natural result of the network-based services offering is that public safety agencies and telephone service providers using the system do not have to purchase up front licenses or invest in large hardware systems. Transactions are priced on a pennies per line per month basis. Using this model, transition from old or inadequate systems can be achieved without large capital investment.

For More Information

For additional information on SCC or the National Data Services Center, please contact SCC Communications at (303) 581-5600. Tours of the NDSC may be scheduled by contacting Mr. Mark Kulaga, Manager of Marketing Communications, at (303) 581-5600. Tours require advance scheduling and completion of a security form and associated clearance waiver.

policy; people thought it was such a good idea that it could succeed without their involvement; or, the issues and consequences simply weren't understood. Facts are, an industry standard is good public policy; it won't happen without industry activism; and the issues don't seem to be well understood throughout the industry.

Charting a Course

The disappointments of this effort can not be allowed to kill the dream. Though it was obscure during the process, in retrospect, one of the biggest failures was a lack of effective communication. We must keep talking and exploring the issues even to the point of exhaustion because many still "don't get it."

It is expected that a new public policy effort will come forth in the next legislative session in California. Hopefully, that new effort will succeed because we will stand together based on a common understanding of the issues and concerns and less on politics.

Keep up the noise level, keep asking the hard questions, and look at every new product as possessing a possible key to the solution. We desperately need a national standard for 9-1-1 or we will have to live with the patchwork and haywire given to us by fate. History teaches us that is a poor course. If the California strategy and system design is wrong, let's build a new one based on a common vision but let's do something!

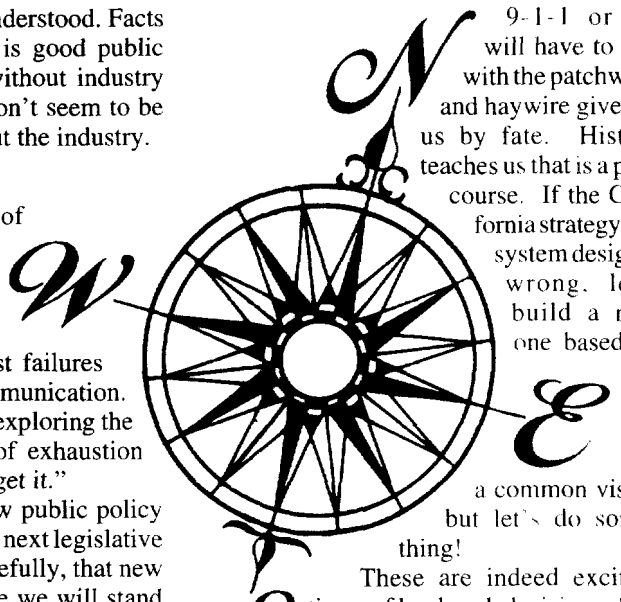

These are indeed exciting times of landmark decisions. The good news is that we all get to participate at a time when legacies will be made.

W. Clay Paxton is executive director, 9-1-1 and Emergency Services of Pacific Bell and is headquartered in Sacramento, California. Prior to joining Pacific Bell in 1980, he was a lieutenant with the Alameda County Sheriff's Department in Oakland. He holds various degrees, including an M.P.A. from California State University, Hayward.

Power Trivia

Q. Who's the most powerful lobbyist for the Public Safety industry?

A. You are. As a voter and constituent, you have the most powerful tools—your hands, a pen and stamp, telephone, and fax machine—to make your voice heard to government. So, when NENA asks you to contact lawmakers or regulators, remember you're part of the solution.

1995 NENA COLLECTION

Mail or fax your order today!
NENA Products • 1560 Fishinger Road, Suite C • Columbus, Ohio 43221
Fax (614) 459-7709 (Charge card orders only)

Our Guarantee *If you are not completely satisfied, we will gladly replace the merchandise or, if you prefer, refund your purchase price.*

Exchanges and Returns *Merchandise returned for exchange or refund will receive our prompt attention. Return instructions will be included with each shipment.*

rdered by:
Mr. ☐ Mrs. ☐ Ms. _____
idress _____
:y, State, Zip _____
ıytime Telephone Number (☐☐☐) ☐☐☐ – ☐☐☐☐ ext. ☐☐☐☐ (in case we have questions about your order)

Ship to: (only if different than Ordered by)
☐ Mr. ☐ Mrs. ☐ Ms. _____
Address _____
City, State, Zip _____

Item No.	Qty.	Color	Description	Size	Cost Ea.	Total Amount

Sub Total

ethod of Payment: Payment must be enclosed. No invoicing/P.O./terms available.
Check (please make check or money order payable to: **NENA Products**)
/ISA
MasterCard
American Express
Acct. # _____ Exp. Date* _____
Signature _____
* We cannot process your order without the expiration date.

Shipping & Handling We choose the most efficient carrier for deliveries to your area.

Merchandise Subtotal	Add
$30 and under	$4.95
$30.01 - $59.99	$5.95
$60.00 and over	$6.95

Outside the continental US add 30% of total purchase cost.

In Ohio, add 5.75% sales tax
Shipping
Total Due

Thank You for your order!

Some items are in-stock and will ship right away; however, please allow 4-6 weeks for delivery.

Consider NENA Products your top quality, top value resource for all of your *custom* embroidery needs. Fax inquiries to (614) 459-7709.

Wireless & 9-1-1

The Rhode Island 9-1-1 Cellular Emergency Call System

by Colonel Ernest E. Ricci

Change, and resistance to change, is inevitable. In the public safety emergency communications service, we would like to think that whatever procedural changes we implement are made for the greater good of the public. Usually they are, when they are made in response to an actual public need rather than one perceived, or anticipated.

The advent of cellular communications systems generated a public safety need to process emergency cellular calls efficiently — differently than conventional telephone calls, primarily because of the fixed vs. mobile status of the caller. There is no universally prescribed method. In fact, because public safety communications systems nationally do not follow a universal number 9-1-1, they maintain unique characteristics as determined by size, type of service, jurisdiction, etc., which in turn govern the choice of processing method(s).

The State of Rhode Island's 9-1-1 cellular communications system retains its own hybridized call processing characteristics. The development of the 9-1-1 cellular emergency call processing system in Rhode Island, why it developed in that manner, some of the little known technical shortcomings in the system, and how one can learn to better utilize the cellular 9-1-1 emergency communications system, are the subjects addressed in this article.

On July 10, 1994, nearly six years after the establishment of the Statewide 9-1-1 Communications System, the Rhode Island Enhanced 9-1-1 Emergency Telephone Division began processing cellular 9-1-1 calls. The separation in time was not intended by the system's planners. In fact, when the Enhanced 9-1-1 system was implemented in 1988, plans to include cellular 9-1-1 were in place at that time. What was lacking was the legislative component

Rhode Island
continued on page 20

Cellular 9-1-1 in New Jersey

by S. Robert Miller and Craig A. Reiner

Call Forwarding of Cellular 9-1-1 Calls

New Jersey Law treats cellular telephone companies in the same manner as other Local Exchange Carriers (LECs). State 9-1-1 regulations authorized the Office of Emergency Telecommunications (OETS) to direct cellular calls to PSAPs, as OETS deemed appropriate. Originally, the cellular vendors were each provided a 7-digit (or 10-digit) telephone number to call forward their 9-1-1 calls. This allowed the calls to be answered at PSAPs where special cellular circuits were installed. However, the location of the caller or cell site were unknown to the 9-1-1 attendant.

The first cellular 9-1-1 calls in New Jersey were directed to the Gloucester County Public Safety Answering Point (PSAP) in late 1986. In 1987, prior to the passage of the 9-1-1 Act which mandated the implementation of a statewide 9-1-1 system, New Jersey changed its method of handling cellular 9-1-1 calls. 9-1-1 calls from cell sites in Burlington County and Bergen County were directed to those county communications centers. All other 9-1-1 calls placed by cellular phones were directed to one of three New Jersey State Police (NJSP) regional dispatch centers. These centers are located in Hammonton, Troop "A," covering the southern part of the state; Totowa, Troop "B," covering the northern part of the state; and West Trenton, Troop "C," covering the central part of the state.

When a call for assistance is received at one of the NJSP dispatch centers, the communications operator interrogates the caller to determine the location of the emergency, then transfers the caller to the most appropriate agency, via a 7-digit telephone number. Each NJSP dispatch center utilizes a computerized telephone auto-dialer to accomplish this transfer. The auto-dialer contains the emergency police numbers for every municipality and locality throughout New Jersey. To accommodate out-of-state cellular 9-1-1 calls, selected locations in Pennsylvania,

New Jersey
continued on page 24

Rhode Island

continued from page 18

which would have allowed the assessment of a user fee for cellular subscribers.

There were two major schools of thought concerning the imposition of a user fee on cellular calls. Those against the user fee held that:

1. Cellular callers would be providing a public safety service by reporting emergencies on public highways; and
2. The cellular system does not contain the automatic location and other Enhanced 9-1-1 features associated with the wire-based system, and since E9-1-1 fees attach to the need to support the E9-1-1 features, cellular users should not be included.

The proponents of the cellular fee issue argued that:

1. Cellular usage extends beyond highway use, and in time the cellular phone would be used as extensively and certainly for the same variety of emergency purposes as the wire-based telephone;
2. The costs associated with the E9-1-1 system attach more to personnel costs than to the hardware costs; and
3. In fact, a greater personnel effort is extended to cellular calls because they lack automatic location features.

A legislative bill was introduced which would have assessed the same $.47 surcharge against cellular subscribers (per telephone number) as exists for the wire-based 9-1-1 system (per telephone line).

While the pros and cons of the cellular user fee proposal were being considered by the legislature, the responsibility for receiving and processing cellular 9-1-1 calls was assigned to the Rhode Island State Police (RISP) — no user fee attached. Cellular call processing was thus provided free of charge by a simple but effective transfer of responsibility. The legislative question of the appropriateness of imposing a user fee against cellular subscribers became moot. Cellular lobbyists were pleased; the political committees who no longer had to make a decision were relieved, and it appeared that the issue was resolved for once and for all, but that was not to be.

It turned out that not everyone was satisfied with the result, least of all the labor union which represents the 9-1-1 telecommunicators. Their argument was that the 9-1-1 call processing task was, by authority of the state labor board, to have been assigned exclusively to the certified 9-1-1 bargaining unit. To have assigned bargaining unit duties to a non-bargaining unit organization constituted, it was alleged, a violation of the State Labor Relations Act. After conducting the required hearings, the State Labor Relations Board rendered a decision on November 27, 1993, which was favorable to the bargaining unit. All 9-1-1 calls, cellular and wire-based, are now processed exclusively by the Rhode Island Enhanced 9-1-1 Statewide system.

The user fee assessment question was not at issue at the Labor Board hearings; therefore, the fee conditions did not change. Cellular users are not charged for the processing effort, and landline 9-1-1 users support the costs for the entire system through a monthly $.47 surcharge assessed per billable line. It may be interesting at this point to learn why the State Police were given the 9-1-1 cellular call processing assignment. Aside from the obvious fee avoidance motivation in this case, there is precedent across the country for directing cellular 9-1-1 calls to the State Police. Perhaps rather than using the term "9-1-1 calls," a more appropriate term would be "emergency calls" since many State Police agencies do not use the digits 9-1-1, but designate other numbers, letters, or symbols in combination for cellular subscribers to call for reporting emergencies on the states' highways. In many jurisdictions, cellular technology preceded 9-1-1 implementation, which would explain the use of other numerals.

The precedent eluded to makes sense when you think of cellular calls as being generated from motorists on the highway system. Under those circumstances, the State Police, whose jurisdiction covers the entire state highway system, is the logical choice:

1. Their jurisdiction extends statewide. The caller does not need to know which political jurisdiction corresponds to the caller's location.
2. The caller does not need to know several numbers associated with several jurisdictions.
3. One number will connect the caller with the appropriate service provider.
4. Cellular communications from an automobile on a highway system is by far the best, if not the only, means for reporting emergencies.

The cellular/State Police connection works particularly well in jurisdictions where 9-1-1 does not exist statewide, county-wide, or at the municipal level or where 9-1-1 is otherwise used sporadically throughout the state. Today, however, with the proliferation of 9-1-1 systems throughout the United States, we see a different set of conditions relative to cellular users, cellular technology, and enhanced 9-1-1 systems deployment.

It will only be a matter of time before cellular calls, in general, will equal or exceed landline calls in the 9-1-1 operations center.

Cellular phones are no longer permanently affixed to an automobile. They are not necessarily used on a state highway system, but are used in the home or office, at a sports arena, the golf course, the beach, etc. Because of the mobility associated with cellular telephones and the size, range, and other quality improvements which have been introduced, more emergency calls are now being generated by cellular users from other than highway locations than was the case only months ago. It will only be a matter of time before cellular calls, in general, will equal or exceed landline calls in the 9-1-1 operations center.

What was an acceptable, appropriate method for processing cellular emergency calls in the relatively recent past may no longer be appropriate. Given an available, effective alternative, the State Police in any jurisdiction would prefer not to process cellular requests for fire services, emergency medical needs associated with illness or accidents in the home, law enforcement incidents in an urban jurisdiction or any of a number of other off-highway emergency activities. Burdened with such non-appropriate cellular calls, the State Police communications center becomes a transfer agency, providing services which detract

Rhode Island

continued from page 20

from the primary functions of the State Police.

Rhode Island has in place a transfer agency for effectively processing cellular 9-1-1 calls; a statewide. E9-1-1 PSAP which uses the transfer method for connecting the 9-1-1 caller with the appropriate public safety agency(s). Today, the Rhode Island State Police are receiving their 9-1-1 cellular calls for service through the statewide 9-1-1 system absent non-jurisdictional fire, rescue, and redundant jurisdictional calls. The State Police receive no more than three calls for the same incident and 9-1-1 telecommunicators inform all subsequent callers that help is on the way. In addition, 9-1-1 telecommunicators stand ready to assist the State Police in completing any extended communications effort.

The entire 9-1-1 cellular system, including cellular service companies, the Rhode Island public safety emergency service providers, and the user population are benefiting from the cellular call processing modification. It was, after all, a change that would have eventually been required to conform to the emergency communications changes taking place in the cellular telephone user population.

The Rhode Island Cellular Configuration

All 9-1-1 cellular calls are initially received by the statewide E9-1-1 PSAP. The state is dissected into quadrants and each quadrant is associated with a State Police barracks. All 9-1-1 calls picked up by cells within each quadrant are programmed to be automatically directed to the barracks serving that quadrant if the State Police is the appropriate agency for that call. When the call is answered, the 9-1-1 telecommunicator's screen displays the time and date of call; the class of service (cellular), and the RISP barracks appropriate to the quadrant within which the call was made.

This modified automatic location information (ALI) is reliable only in that it identifies the call as cellular. Whether the call is picked up by the cell appropriate to the caller location (which determines the barracks jurisdiction) is not very reliable. Cell locations across state lines will often pick up a foreign cellular signal when the motorist is traveling close to state boundaries. Within the established intrastate quadrants are sixteen boundaries which could result in errant transmissions, and often do. When a 9-1-1 call is automatically (electrically) transferred to the barracks displayed on the telecommunicator's screen, the caller is then speaking with a State Police officer.

In cases where the call is picked up by a foreign cell, the call is automatically transferred to an inappropriate barracks and a second transfer is conducted by the State Police dispatcher. The caller is debriefed twice and often expresses dissatisfaction with the 15-20 second delay in processing.

In the cellular world, such occurrences are often unavoidable, but because the user is unaware of the Rhode Island cellular processing protocol and the inherent shortcomings of the cellular network, the user is critical of the 9-1-1 system as a whole. Some expect the impossible; a technologically perfect system which works to their standards of satisfaction 100% of the time. How soon we forget that only a few years ago, a serious accident or incident on a highway was reportable only by emergency call box (if they existed and if they were operable). The other alternative was to take the next exit off the highway and find a public telephone booth, or an open business where a telephone was available. Of course, you could awaken the resident of the nearest home and ask to use the telephone. Would you agree that any of those alternatives would exhaust more than 15-20 seconds? Maybe 15-20 minutes?

In such cases, a modification in the call processing procedure could save time and avoid criticism. Rather than transfer the caller from the receiving barracks to the appropriate barracks by the initial State Police call taker, the data could be relayed by radio or by telephone and the cellular caller reporting the incident need not be involved beyond the initial call.

As to the time absorbed in giving information to a 9-1-1 telecommunicator, it is not necessary for the caller to recite a full description of the event. That exhausts valuable time. The 9-1-1 telecommunicator needs to know only whether the matter warrants a police, fire, or emergency medical transfer. Obviously, a whole new public education effort must be launched to explain the cellular call processing system and the advantages/impediments inherent in the technology.

A few suggestions to cellular users when reporting a 9-1-1 emergency (we define a 9-1-1 emergency as any incident which requires immediate police, fire or emergency medical attention):

1. Know the location of the incident you are reporting, and be able to communicate that location clearly to the dispatcher at the service agency — police, fire, medical.
2. Speak slowly and distinctly.
3. Turn off, or turn down the volume on your car radio, and if necessary, close your car windows. Often background highway sounds are overpowering.
4. If you are asked to repeat, please do so. It's not that we are not paying attention; reception is sometimes of poor quality. Your car may be passing under a bridge abutment, or between two eighteen-wheelers. Those conditions could interfere with your radio transmission, at least intermittently.
5. If you can't get through, hang up and dial again.

Radio waves are often unable to overcome certain topographic conditions, atmospheric conditions, etc. In the world of radio waves, such occurrences are unavoidable. Even top-of-the-line public safety radio communication systems are susceptible to radio transmission/reception problems. It is not uncommon for a police or fire department whose jurisdiction covers a relatively small area to have to install repeaters at strategic points within their jurisdiction to overcome weak reception. We might have had less difficulty adjusting to the idiosyncracies of a cellular phone if we had just called it by its proper name — a mobile radio, radio telephone or a cellular radio. They use radio waves which are converted and interfaced (interconnected) with hardwire telephone lines.

If we continue to equate cellular radio performance with a wire-based telephone, we will continue to be disappointed. Although both have their inherent benefits, they also have shortcomings, and they are two different technologies. After all is said and done, both cellular and wire-based telephones play an indispensable role in improving the quality of life for those who keep them in good condition, use them properly, and accept them for what they are — man-made instruments with less than magical powers.

Colonel Ricci is executive director of the E9-1-1 Uniform Emergency Telephone System in North Providence, Rhode Island. He can be reached at 401-354-0911; Fax 401-354-0933.

Wireless & 9-1-1

The Rhode Island 9-1-1 Cellular Emergency Call System

by Colonel Ernest E. Ricci

Change, and resistance to change, is inevitable. In the public safety emergency communications service, we would like to think that whatever procedural changes we implement are made for the greater good of the public. Usually they are, when they are made in response to an actual public need rather than one perceived, or anticipated.

The advent of cellular communications systems generated a public safety need to process emergency cellular calls efficiently — differently than conventional telephone calls, primarily because of the fixed vs. mobile status of the caller. There is no universally prescribed method. In fact, because public safety communications systems nationally do not follow a universal number 9-1-1, they maintain unique characteristics as determined by size, type of service, jurisdiction, etc., which in turn govern the choice of processing method(s).

The State of Rhode Island's 9-1-1 cellular communications system retains its own hybridized call processing characteristics. The development of the 9-1-1 cellular emergency call processing system in Rhode Island, why it developed in that manner, some of the little known technical shortcomings in the system, and how one can learn to better utilize the cellular 9-1-1 emergency communications system, are the subjects addressed in this article.

On July 10, 1994, nearly six years after the establishment of the Statewide 9-1-1 Communications System, the Rhode Island Enhanced 9-1-1 Emergency Telephone Division began processing cellular 9-1-1 calls. The separation in time was not intended by the system's planners. In fact, when the Enhanced 9-1-1 system was implemented in 1988, plans to include cellular 9-1-1 were in place at that time. What was lacking was the legislative component

Rhode Island
continued on page 20

Cellular 9-1-1 in New Jersey

by S. Robert Miller and Craig A. Reiner

Call Forwarding of Cellular 9-1-1 Calls

New Jersey Law treats cellular telephone companies in the same manner as other Local Exchange Carriers (LECs). State 9-1-1 regulations authorized the Office of Emergency Telecommunications (OETS) to direct cellular calls to PSAPs, as OETS deemed appropriate. Originally, the cellular vendors were each provided a 7-digit (or 10-digit) telephone number to call forward their 9-1-1 calls. This allowed the calls to be answered at PSAPs where special cellular circuits were installed. However, the location of the caller or cell site were unknown to the 9-1-1 attendant.

The first cellular 9-1-1 calls in New Jersey were directed to the Gloucester County Public Safety Answering Point (PSAP) in late 1986. In 1987, prior to the passage of the 9-1-1 Act which mandated the implementation of a statewide 9-1-1 system, New Jersey changed its method of handling cellular 9-1-1 calls. 9-1-1 calls from cell sites in Burlington County and Bergen County were directed to those county communications centers. All other 9-1-1 calls placed by cellular phones were directed to one of three New Jersey State Police (NJSP) regional dispatch centers. These centers are located in Hammonton, Troop "A," covering the southern part of the state; Totowa, Troop "B," covering the northern part of the state; and West Trenton, Troop "C," covering the central part of the state.

When a call for assistance is received at one of the NJSP dispatch centers, the communications operator interrogates the caller to determine the location of the emergency, then transfers the caller to the most appropriate agency, via a 7-digit telephone number. Each NJSP dispatch center utilizes a computerized telephone auto-dialer to accomplish this transfer. The auto-dialer contains the emergency police numbers for every municipality and locality throughout New Jersey. To accommodate out-of-state cellular 9-1-1 calls, selected locations in Pennsylvania,

New Jersey
continued on page 24

New Jersey

continued from page 18

Delaware, and New York are also included in the auto-dialer directory. To route the call to the correct agency, the communications operator must rely on the information provided by the caller. At times that information is incorrect or unknown and determining a location is a time consuming process.

This method was implemented at a time when the use of cellular phones was not widespread, due to the high cost of purchasing the phone and a cellular network that was still in its inception. During this time, good cellular coverage was largely limited to the urban areas of the state. Today, however, cellular coverage is statewide.

In 1989, the 9-1-1 Act was signed into law, mandating the installation of a statewide 9-1-1 system. The 9-1-1 Act required OETS to establish a State plan for an emergency enhanced 9-1-1 system within 270 days of the operative date of the Act. In January 1990, the State 9-1-1 Plan was adopted which addressed cellular as follows:

> *The cellular mobile telephone has the ability to constantly move from municipality to municipality, across county borders and state lines. Thus, the cellular telephone number cannot be used to identify the location from which the call originated. However, cellular mobile telephones must be integrated into the 9-1-1 network to the extent possible considering the current state of technology.*

> *The cellular mobile telephone companies must transmit to a New Jersey Bell 9-1-1 tandem, via a single common trunk group, a unique seven-digit identification number for each cell site, or if so configured, each sector at the cell site. The 7-digit number will be the cell site or sector cell where the 9-1-1 call originated. This number will be treated by the 9-1-1 tandem similar to an automatic number identification (ANI) for that particular emergency call and selectively routed to a PSAP designated by OETS after consultations with counties and municipal 9-1-1 coordinators.*

> *All cellular site locations must be included in the ALI data base. This information is beneficial to the PSAP attendant as a starting reference point for cellular 9-1-1 calls. The cellular mobile carriers shall provide New Jersey Bell and OETS with cell site locations for all existing cell sites and any new cell sites added to their network.*

The State 9-1-1 Plan led to 9-1-1 Regulations, adopted by the Attorney General in April 1990. These regulations, subchapter 7 (13:81-7.1), require cellular companies to participate in this system as follows:

> *Each cellular mobile telephone company shall transmit to a New Jersey Bell 9-1-1 tandem, via a single common trunk group, a unique seven-digit identification number for each cell site, or if so configured, each sector at the cell site. This number will be selectively routed to a PSAP designated by OETS after consultation with county 9-1-1 coordinators and municipalities*

The use of cellular phones has increased continuously in New Jersey. In 1988 the average daily cellular 9-1-1 call volume at the NJSP Cellular PSAPs was 39 calls. Today, the average daily call volume of cellular 9-1-1 calls exceeds 500 calls ***(see Figure 1).***

This call volume will dramatically increase as cellular use becomes more widespread and new communication services, such as Personnel Communications Systems (PCS) are inaugurated. All of New Jersey's interstate highways encourage the use of cellular 9-1-1 as seen by the installation of the signs along the roadway, indicating "EMERGENCY 9-1-1 CAR PHONE."

With the wireless communications industry expanding, the use of these wireless devices for reporting emergencies will be commonplace. Studies indicate that a large percentage of these devices are purchased for the purpose of security when traveling the highways. Cellular companies have been using this as a marketing strategy.

Currently, the only accurate piece of information available to route calls is the location of the cellsite receiving the 9-1-1 call. While this is not enough information to determine the exact location of the caller, in many areas of the state it allows the caller to be directed to the most appropriate PSAP, based on the coverage area of the cell site. Once answered at the PSAP, further interrogation is made by call-takers most familiar with that general region.

Exsisting Cellular Telephone Technology

The FCC has allocated a 25 MHz. spectrum for cellular use. This spectrum is divided into two 12.5 MHz. bands. One

Figure 1 - NJSP Cellular 9-1-1 Calls

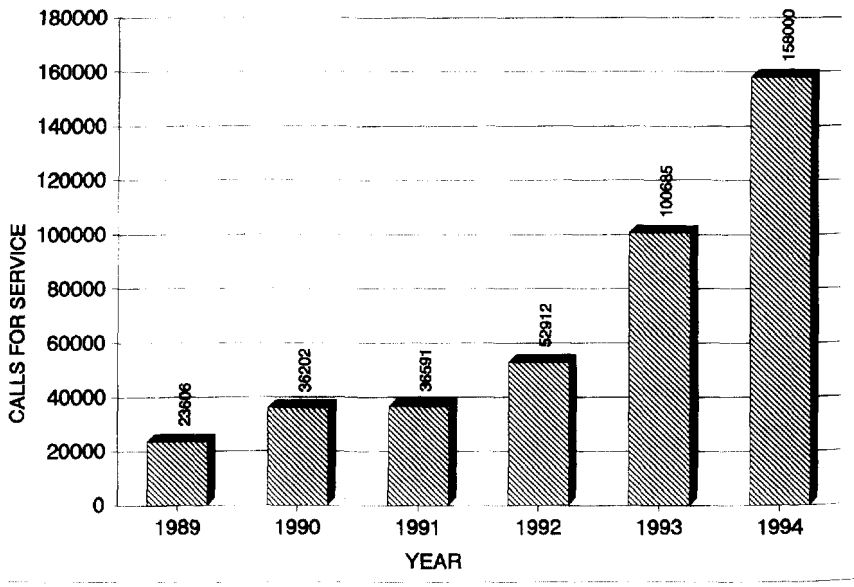

New Jersey

continued from page 26

band is to be used by the non-wireline cellular provider, referred to as the "A side." The other band is used by the wireline cellular provider, referred to as "B side." All areas where cellular service is offered have two cellular providers, generating competition. In New Jersey, the wireline provider is Bell Atlantic Mobile Systems. Non-wireline providers throughout the state include Comcast, Metrophone, Ocean County Cellular, and others. A new provider of wireless communications in New Jersey, similar to cellular, is Nextel.

The basic concept in a cellular system is frequency re-use. This concept is implemented by employing a pattern of overlapping cells. Each cell is viewed as a hexagon.

A cellular telephone system typically includes many cell sites throughout a region. The population density and the amount of cellular traffic determine the amount and size of cell sites. Based on design, cell sites are usually spaced anywhere from one-half of a mile to as much as twenty miles apart. Each cell site generally comprises one or more antennas mounted on a triangular platform. These antenna platforms are placed on top of towers or large buildings, fifty to three hundred feet above the surrounding terrain. Cell sites utilizing three antennas are sectorized, and each antenna sector is designed to cover a 120 degree area.

The cell sites are connected to a centrally located cellular switch, referred to as a Mobile Telephone Switching Office (MTSO). The MTSO is basically a telephone switching office as far as hardware is concerned, but it uses a substantial amount of additional equipment programmed for cellular control. It not only connects the system to the telephone network, but continuously monitors signal strength during a call, and switches the cellular phone from cell site to cell site when necessary as the unit moves. The MTSO also records call information for billing purposes.

Cell sites are arranged in clusters where each cell site is assigned a separate set of channels. These channels can be re-used in each cluster, making frequency re-use possible. Each cell site has at least one control channel dedicated for signalling between the cell and the mobile unit. The remaining channels are for conversation. Ideally, the signal generated from each cell site is strong enough to provide coverage within that cell, however not powerful enough to interfere with a cellsite in an adjacent cluster utilizing the same channel.

The cellular telephone unit consists of a control unit, a transceiver, and appropriate antenna. All cellular telephones have the capability of receiving all of the 666 channels in the 800 MHz. range allocated for cellular use. Each cellular phone has its own telephone number assigned, like any other telephone. Calling from a cellular is much like dialing any other phone, utilizing area codes and the number called.

When a cellular phone is turned on, it monitors data being transmitted on a control channel by the cell with the strongest signal. If the strength of the signal becomes weak as the cellular phone travels through the region, the unit searches for a channel with a stronger signal from another cell. Once a cellular call has been originated, the process of monitoring signal strength continues, and the call may be handed off to another cell site as the vehicle travels down the highway.

A cellular phone is capable of placing a call wherever cellular service is available. If the call is outside of the cellular area covered by the purchased plan, there is usually an additional cost called a roaming charge. With this feature, someone who purchased a cellular plan in Maine would be able to place a 9-1-1 call from their cellular phone while traveling through New Jersey.

The ability of a cellular phone to receive a call when outside their cellular coverage area is not as easy as placing a call. Unless the subscriber has purchased an option that will track the movement of the cellular phone from system to system, a special number must be dialed prior to the cellular phone number. This number is referred to as the "roamer access number." When dialed, calls can be completed to subscribers outside their coverage area. If that individual from Maine calls 9-1-1 to report an emergency on the New Jersey Turnpike, between exit 2 & 3, and the call-taker obtains the caller's cellular phone number to call that person back, the call-taker would need to do the following: (1) determine the correct roam access number for the cellular system that processed the 9-1-1 call, (2) dial the roam access number and wait for a second dial tone, and (3) dial the area code and the cellular phone number of the cell phone.

In a perfect environment, cellular calls would be received and processed by the cell site closest to the unit placing the call. This is not always the case. Due to excessive channel loading, and the nature of radio signal propagation, many times calls are processed by what would appear to be an inappropriate cell site. This condition occurs frequently and as a result, NJSP locations receive 9-1-1 calls originating in Pennsylvania, Delaware, and New York.

Routing of Cellular 9-1-1 Calls by Cell Site/Sector

As discussed earlier, the present technology used in cellular 9-1-1 cannot transmit the location of the cellular phone placing the call. In addition to not knowing the location, the subscriber's name cannot be displayed on the ALI screen. When a 9-1-1 call is placed from a cellular phone, the call will enter the New Jersey 9-1-1 network and be selectively routed to the appropriate PSAP as determined by OETS. An evaluation of each cell site is made, based on the geographic location and coverage area, from information supplied by each cellular company.

Each cell site, or sector if the cell site is sectorized, is assigned a unique 7-digit telephone number, called the Pseudo Automatic Number Information (PANI). This number enables 9-1-1 calls received by that cell site to be selectively routed to the PSAP *(see Figure 2)*. These 7-digit number assignments all have the area code of 908 and the NXX (or exchange) of 250. The assign-

Figure 2 - Current Cellular 9-1-1 ALI Screen

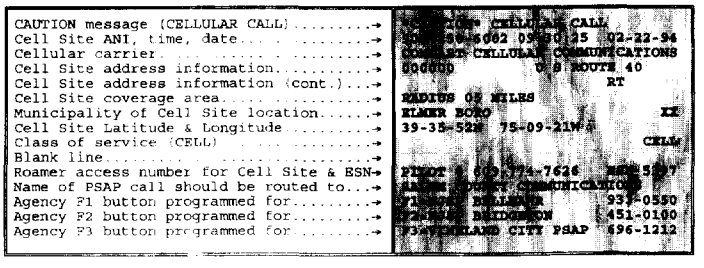

New Jersey

continued from page 28

ment of these numbers is coordinated between Bell Atlantic, the cellular providers, and OETS.

When a cellular 9-1-1 call is received at the PSAP, it must be understood by the calltaker that the information displayed on the ALI screen represents information about the cell site, not the caller. Information that will be displayed on the screen includes the name of the cellular company, location of the cell site, name of the PSAP, roamer access number, and possible transfers that may be needed. No information about the caller or their location will appear on the ALI screen.

To allow the 9-1-1 network to selectively route the cellular calls, each cell site, or cell site sector had to be assigned its own unique emergency service number (ESN). In order to accomplish this, the data base for cell sites had to be uniquely different from the existing data base. The method used to separate the data bases was the construction of a data base using the pseudo state abbreviation of XX. On the ALI screen, cellular calls will be from the state of XX.

The selective transfer buttons, police, fire, EMS, have been modified for each ESN, based on the cell site coverage area. When cellular calls need to be redirected, they can be transferred over the 9-1-1 network, via the selective transfer buttons. If the receiving agency has enhanced 9-1-1 equipment, they will also receive the screen information.

Each cell site is evaluated by OETS and similar modifications are made to the selective transfer buttons at each PSAP. For example, in Salem County some buttons are programmed for Delaware State Police and Chester, Pennsylvania, Police. The northern part of the State will have some buttons programmed for New York State Police Departments as appropriate. The programming of these buttons will most likely be agencies not commonly utilized by that PSAP.

Routing of Cellular 9-1-1 Calls by Latitude/Longitude

In an effort to stimulate the development of an accurate location system, OETS in concert with its 9-1-1 tandem vendor and telephone local exchange carriers, demonstrated a real-time coordinate-based ALI test during the week of October 3, 1994. Coordinate-based selective routing software allowed cellular calls to route to the appropriate PSAP based on the cellular caller's X-Y coordinates. Once the cellular caller was connected to the assigned PSAP, a PC terminal at the PSAP operator's position displayed a map showing the actual location of the cellular caller, along with the longitude and latitude, the heading, the speed, and the cellular's call back number. Representatives of the cellular industry and public safety entities were invited to attend. All in attendance agreed that the system, as demonstrated, worked extraordinarily well and such a system could be implemented within two years.

There were two main components of the wireless ALI test: first, the method used to determine the location of the wireless caller; second, the method used to route the call to the appropriate PSAP and to display the information. For the New Jersey demonstration, the RALI (Roving Automatic Location Identification) system developed by Smith Advanced Technology, Inc., utilizing an advanced Rockwell global positioning system (GPS) receiver chip, was used. RALI, in conjunction with the Rockwell specialized 9-1-1 tandem, successfully routed the cellular calls to the appropriate PSAP, based on the real time X-Y coordinates determined by the RALI cellular unit.

The calls terminated on two RALI PC terminals located at the testing PSAP in Gloucester County, New Jersey. One terminal displayed the caller's position and call-back information on a street level map for the Gloucester County emergency service zones (ESZ) and a second terminal yielded the same for ESZs in the Philadelphia area. In addition to Rockwell and Smith Advanced Technology, other participants in the test included Bell Atlantic, Gloucester County Communications Center, and KML Technologies.

Based on this demonstrated technology, it is clear that GPS is a satisfactory way of determining the location of cellular callers utilizing mobile cellular phones with an external roof-mounted GPS antenna. Portable 600 mW phones with a self-contained GPS antenna were not demonstrated. Moreover, the next generation of wireless telephones (PCS) will be portable devices. Therefore, a question remains as to the effectiveness of GPS embedded in a handheld portable cellular phone with a self-contained antenna. Future advancements in GPS might be able to bridge this gap; otherwise a second locational system may also have to be used.

An additional wireless 9-1-1 beta test, using time-difference-of-arrival (TDOA), will be conducted in the fall. The trial is scheduled to begin on November 1, 1995, along the New Jersey Turnpike (NJTP) from the Delaware and New Jersey State border (exit 1) to Bordentown (exit 7), an approximately 50 mile section. This will be a trial of the Associated Group's TruePosition 9-1-1 cellular system. Others cooperating in the trial, include Bell Atlantic, Rockwell, Comcast, KML, and GTE.

The exact coverage area must still be engineered, and is dependent upon tower sites. The coverage area would also be expected to cover several municipalities surrounding the NJTP, and most of I-295 as it runs parallel. Based on the true latitude and longitude of the cellular caller, the calls will be selectively routed to one of four County 9-1-1 PSAPs (Salem, Gloucester, Camden, Burlington) participating in the trial. For the trial, Comcast and Bell Atlantic 9-1-1 trunks will utilize Feature Group D signalling which will allow for the provision of both the pseudo ANI representing the cell site and sector, and the actual cellular's (call-back) ANI *(see Figure 3)*. Selective fields will be overwritten in the

Figure 3 TruePosition Network

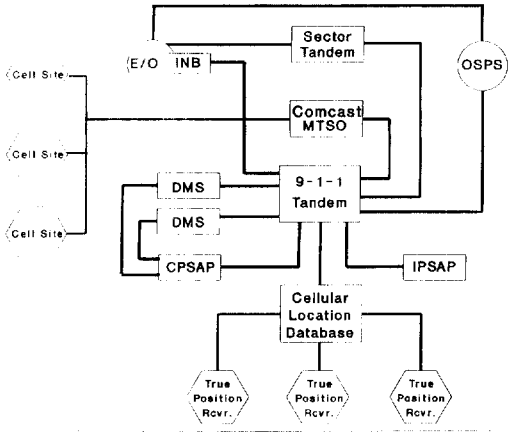

Figure 4 - TruePosition Demonstration 9-1-1 ALI Screen

CAUTION message (WIRELESS CALL).....→	*CAUTION* WIRELESS CALL
Caller's ANI, time, date.....→	609-342-5678 09:30:25 02-22-94
	COMCAST CELLULAR COMMUNICATIONS
	000000 U S ROUTE 40
	RT
	RADIUS 05 MILES
	ELMER BORO XX
Caller's Latitude & Longitude.....→	39-35-51N 75-10-28W
Caller's direction & speed of travel....→	DIR 124 SPEED 048 CELL
ROAM NO.....→	ROAM NO 609-774-7626 ESN 5397
	SALEM COUNTY COMMUNICATIONS
	F1-PSAP BRIDGEWTR 933-0550
	F2-PSAP BURLINGTON 451-0100
	F3-VINELAND CITY PSAP 696-1212

ALI records to yield the true caller's ANI, latitude & longitude, speed, and direction of travel *(see Figure 4)*.

Other promising systems are waiting evaluations by the cellular industry and the public safety community. New Jersey has spent considerable effort researching methods available for locating and routing wireless 9-1-1 calls and feels that a decision on the best method of wireless ALI and ANI must be dependent on trials and evaluations. We feel that the FCC's five year proposal for wireless ALI and ANI (see FCC Notice, para. 51.) can and must be met without delay, and that this could even be accomplished within four years if the cellular industry would make it a priority. Testing and evaluations could be accomplished within two years and hardware and software modifications could be achieved within two additional years. Therefore, New Jersey has urged the Commission in its comments to mandate wireless 9-1-1 ALI and ANI features similar to wireline 9-1-1 within four years.

Bob Miller is Executive Director of the New Jersey 9-1-1 Office of Emergency Telecommunications (OETS) and has been with the New Jersey program since its inception in early 1989. Prior to this, he was Director of the Gloucester County Communications Center. Bob was a member of the ASTM 9-1-1 standards committee, the New Jersey Emergency Response Commission, and the New Jersey 9-1-1 Commission. He is a member of the Gloucester County Communications Center Advisory Board, NENA, APCO, NASNA, and NCOA.

Craig Reiner is an Emergency Telecommunications Systems Analyst with the New Jersey 9-1-1 Office of Emergency Telecommunications (OETS). Craig has been with the New Jersey program since 1990 and is concentrating on cell site routing of 9-1-1 calls. Prior to his employment at OETS, he was operations and telecommunications coordinator for the West Jersey Health System paramedic program. Craig is a member of the Camden County Communications Center Advisory Board, NENA and APCO.

995

Mail or fax your order today!
NENA Products • 1560 Fishinger Road, Suite C • Columbus, Ohio 43221
Fax (614) 459-7709 (Charge card orders only)

Our Guarantee *If you are not completely satisfied, we will gladly replace the merchandise or, if you prefer, refund your purchase price.*

Exchanges and Returns *Merchandise returned for exchange or refund will receive our prompt attention. Return instructions will be included with each shipment.*

ered by:

r. ☐ Mrs. ☐ Ms. _____

ress _____

, State, Zip _____

time Telephone Number ( ) – ext. (in case we have questions about your order)

Ship to: (only if different than Ordered by)

☐ Mr ☐ Mrs ☐ Ms. _____

Address _____

City, State, Zip _____

Item No.	Qty.	Color	Description	Size	Cost Ea.	Total Amount

hod of Payment: Payment must be enclosed. No invoicing/P.O./terms available.

heck (please make check or money order payable to: **NENA Products**)

SA
asterCard
merican Express

Acct. # _____ Exp. Date* _____

Signature _____

* We cannot process your order without the expiration date.

Shipping & Handling We choose the most efficient carrier for deliveries to your area.

Merchandise Subtotal	Add
$30 and under	$4.95
$30.01 - $59.99	$5.95
$60.00 and over	$6.95

Outside the continental US add 30% of total purchase cost.

Sub Total	
In Ohio, add 5.75% sales tax	
Shipping	
Total Due	

Thank You for your order!

Some items are in-stock and will ship right away; however, please allow 4-6 weeks for delivery.

Consider NENA Products your top quality, top value resource for all of your *custom* embroidery needs. Fax inquiries to (614) 459-7709.