- A dead-end pole has only half the transverse load that it would have if the line continued on.
- Intermediate poles set in line may be lighter than the existing poles if no conductors are added.

Following are examples of typical wind-loading calculations.

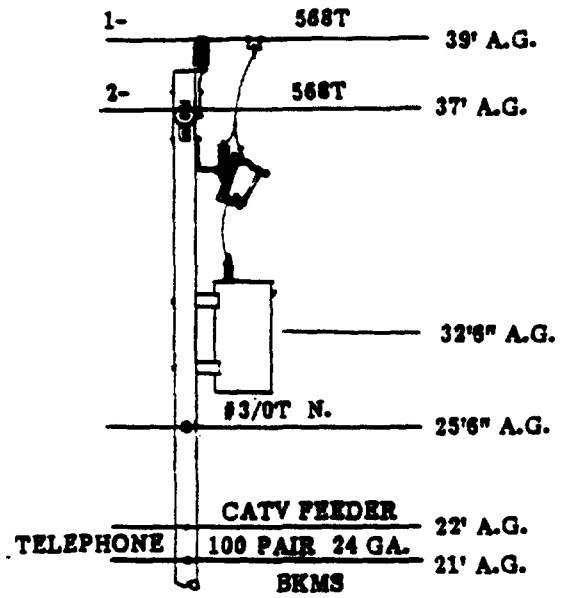

WIND LOADING CALCULATIONS: EXAMPLE A

Determine class of 45' pole required for 3-568 kcmil ACAR primary,

1 #3/0 AAAC neutral,
1 - CATV feeder cable
1 - 100 pair 24 ga. BKMS telephone cable.

Proposed average span length is 175 ft. A 50 kVA transformer is to be installed.

Calculate moment for each conductor and for transformer. Total all moments.

Conductors:

No. of Conductors	x	Wind Load Per Foot (TABLE A-1)	x	Span Length	x	[Height Above Ground + Setting Depth / 3]		
1	x	.659	x	175'	x	(39' + 2.33')	=	4,766.4 ft.-lb.
2	x	.659	x	175'	x	(37' + 2.33')	=	9,071.5 ft.-lb.
1	x	.377	x	175'	x	(25.5' + 2.33')	=	1,836.1 ft.-lb.
1	x	.56	x	175'	x	(22' + 2.33')	=	2,384.3 ft.-lb.
1	x	.84	x	175'	x	(21' + 2.33')	=	3,429.5 ft.-lb.

Transformer:

Wind Load from TABLE A-2	x	[Height Above Ground + Setting Depth / 3]		
49	x	(32.5' + 2.33')	=	1,706.7 ft.-lb.
		Total of moments		23,194.5 ft.-lb.

From TABLE A-3, the initial allowable moment of a 45'/3 pole is 23,561 ft.-lbs. The 45'/3 pole is adequate for this application.

© Copyright, 1980 FPL

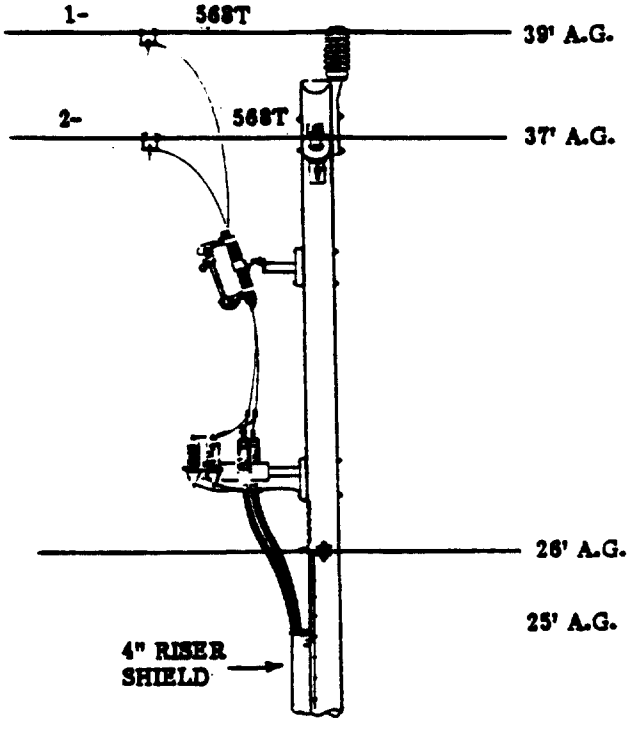

WIND LOADING CALCULATIONS: EXAMPLE C

Determine class of 45' pole required for 3-568 kcmil ACAR primary, 1 #3/0 AAAC neutral, and a 4" riser shield.

Proposed average span is 200'.

Calculate moment for each conductor and for riser shield. Total all moments.

No. of Conductors	x	Wind Load Per Foot (TABLE A-1)	x	Span Length	x	[Height Above Ground	+	Setting Depth / 3]		
1	x	.659	x	200'	x	(39'	+	2.33')	=	5,447.3
2	x	.659	x	200'	x	(37'	+	2.33')	=	10,367.4
1	x	.377	x	200'	x	(26'	+	2.33')	=	2,136.1

Riser Wind Load from TABLE A-2	x	Riser Height Above Ground	x	[Riser Height A.G. / 2	+	Setting Depth / 3]		
4 lb/ft	x	25'	x	(25/2	+	2.33')	=	1,483.0

Total of all moments = 19,433.8 ft.-lb.

From TABLE A-3, the initial allowable moment of a 45'/3 pole is 23,535 ft.-lbs.

© Copyright, 1980 FPL

4. Columnar (Axial) Loading On Wood Poles

a. General

At corners and deadends, poles are down-guyed to hold conductor tension. The vertical component of the tension in the guy wire places an axial compressive force on the pole. The pole is a column, and excessive axial compressive load will cause it to bow. The critical buckling load has been reached when bowing starts. At this point, if the loading is reduced, the pole will straighten out. If loading is increased, the bowing will increase, and failure by buckling will eventually result if the loading is increased enough.

Where a combination of vertical, transverse or longitudinal loads may occur simultaneously, the structure shall be designed to withstand the simultaneous application of these loads.

b. Longitudinal Strength at Deadends

NESC Rule 261A2 states that at deadends, the pole must be able to support the longitudinal loading multiplied by 2 when installed or 1.33 at replacement without exceeding the ultimate fiber stress. For guyed poles, this fiber stress is measured at point of attachment of the guy. FPL practice is to attach guys at or very near the point of application of conductor tension, so that this requirement is seldom a problem for standard guyed deadend poles. Where extreme wind loading conditions are used, (see NESC Rules 260C and 250C) a multiplier of not less than 1 may be used for poles.

c. Columnar (Axial) Loading

Guyed poles must be designed as columns resisting the vertical component of guy tension, plus any other vertical loads. A guyed deadend pole may be considered as a column fixed in place at the "fixity" point, defined as 0.33 of the setting depth below the ground line. At the top, it is fixed in position in one plane (the longitudinal) only and free to bow in either plane. Lateral movement of the pole top will be resisted by a slight increase in conductor tension.

d. Corner or Junction Poles

A corner pole or a junction pole can be considered to have the same restrictions at the bottom as a deadend pole. At the top, however, it is fixed in position in each plane.

At a junction pole, the guy would stress the pole in the same manner as at a deadend pole. At a 90° corner, there would be two guys, each exerting a downward force on the pole. However, the direction of the wind cannot be perpendicular to both conductors. A wind direction should be assumed which will give the maximum resultant load. Proper reduction should be made in loading to account for the reduced wind pressure on the wires resulting from the angularity of the application of the wind to the wires.

© Copyright, 1980 FPL

e. Calculating Allowable Axial Loading

If we assume, as an approximation, that the bottom of the pole is fixed and that the top is held in place as though pinned on a ball joint, Euler's modified formula with an end condition factor of 0.8 may be used. However, to be more conservative, we used a factor of 1.0 to obtain the recommended allowable loadings shown in TABLE C. This table may be modified if new data, specifically applicable to guyed distribution poles, is obtained.

$$P = \frac{\pi^3 \times E \times d^4}{64 \times 1 \times SF \times (12H)^2} = \frac{\pi^3\ 1.76 \times 10^6}{64 \times 1 \times 1 \times 144} \times \frac{d^4}{H^2} = 5921\frac{d^4}{H^2}$$

(Euler's Formula, Southern Yellow Pine, with effective column length equal to actual column length)

where P = Allowable downward force on the pole, in pounds.

E = Modulus of elasticity, 1.76×10^6 psi for southern yellow pine.

H = Distance in feet from point of guy attachment to fixity point.

SF = Safety Factor. We justify using 1.0 on basis that maximum loading is based on wind loading, an infrequent, short-time load, and that Euler's formula is conservative for distribution length poles. In addition, minimum diameters for pole class were used.

d = Diameter, in inches at critical point, (1/3 H feet down from guy attachment).

© Copyright, 1980 FPL

Or, it may be calculated this way: $T_{DG} = (10,469)^2 + (10469)^2 = 14,805$ lb. (more accurate).

Referring to DCS D-5, Table II, we find that a 9/16" EHS galvanized guy wire, with allowable deadend tension of 20,160 lbs. will be required.

If the guy is not attached at the optimum 45° angle, the calculation may be done as follows:

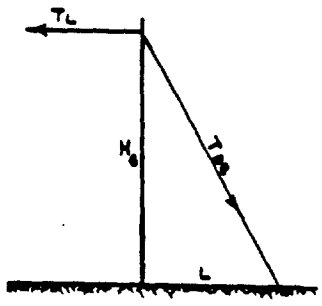

$$T_{DG} = \frac{T_L}{L} \times \sqrt{H_G^2 + L^2}$$

$$P = \frac{T_L}{H_G} \times \sqrt{H_G^2 + L^2}$$

Where H_G is the height above ground of the guy attachment, and L is the guy lead.

Having determined the pole class and the required guying, it is desirable to check to be sure that the simultaneous application of axial loading (caused by the deadend guying) and transverse wind loading does not overstress the pole fibers. The common practice in doing this is to consider that the greatest fiber stress is experienced at the "critical point" (see Fig. 1), which is defined as follows.

If poles were not tapered, axial loads would cause them to bow in the middle - that is, halfway between the fixity point and the point where the load is applied. Fiber stress due to bending moments from transverse loading would be uniform up and down the pole. However, since each pole is tapered, the point of maximum fiber stress is shifted upward. Looking again at Fig. 1, the critical point, or point of greatest fiber stress, is generally accepted to be at H/3, measured down from

(1) the pole top, when considering wind loading on the pole;
(2) the point of conductor attachment, when considering wind load upon conductors;
(3) the point of guy attachment, for axial loads.

Since points 1, 2, and 3 are usually only a few inches apart, it is sufficiently accurate for our purposes to assume one point, such as point 2, from which to measure to locate the critical point.

© Copyright, 1980 FPL

The final check is: $\frac{P}{P_{allowable}} + \frac{M}{M_{allowable}}$

$$= \frac{10,469}{15,500} + \frac{698}{8000} \leq 1.0 \ ?$$

$$.6754 + .0873 = .7627 \leq 1.0$$

The combined loading is acceptable.

It is not suggested that this involved calculation need be done for every proposed deadend pole. However, it should be done for several commonly seen combinations of pole, conductor size and span lengths. This will give an understanding of the process, and a file of solutions which will cover many situations.

Example #2. In Example 1, suppose it was not possible to get an adequate lead for a down guy. Design a span guy and guyed stub to hold this deadend. The stub would be 50 ft. from the deadend.

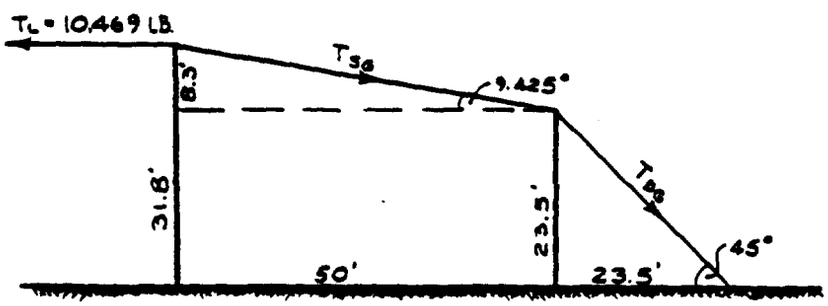

$T_L/T_{SG} = \cos(\tan^{-1} 8.3/50) = \cos 9.425^\circ = 0.9865$

$T_{SG} = T_L/0.9865 = 10,469/0.9865 = 10,612$ lb.

Axial load on DE pole due to $T_{SG} = T_{SG} \times \sin 9.425^\circ = 1,738$ lb.

$T_L/T_{DG} = \cos 45^\circ = 0.707$; $T_{DG} = T_L/0.707 = 10,469/0.707 = 14,808$ lb.

Axial load on guy stub = Downward Component T_{DG} - Upward Component T_{SG}

Axial load on stub = $T_{DG}(\sin 45^\circ) - 1738 = 10,469 - 1738 = 8,731$ lb.

The axial load on stub is within allowable limits for a 30 ft. class 5 pole (TABLE C); 7/16 EHS guy wire will be required for the span guy and 9/16 EHS for the down guy.

<u>Solution</u>: Use 30 ft. class 5 stub, with 1:1 anchor lead, 7/16 EHS guy wire for the span guy and 9/16 EHS for down guy. Choose an anchor from DCS D-4 which will not exceed the allowable tension when holding 14,808 lb. Check to see that P/Pa + M/Ma = 1 for the stub. In this case, we are well on the safe side.

© Copyright, 1980 FPL

b. For front distribution, easements should be obtained, and poles set one foot inside the property. If this is impractical, front distribution poles generally should be in the road right-of-way (R/W), set with the field face at the R/W line. Poles should be not less than one foot from the street side of the curb where there is a curb. See also DCS B-3, Note 12.

2. Primary and Secondary Roads

Sidewalk widths vary somewhat, but the five-foot sidewalk with six-inch curb is most prevalent. The practice of leaving a grass strip between the sidewalk and the curb has essentially been abandoned. As a consequence, any new pole line located on a six-foot offset from the R/W line is a candidate for future relocation.

It is therefore recommended that an attempt to be made to locate all new pole lines on private property with the road face of the pole at the R/W line. With vertical construction, this will eliminate conductor encroachment over private property. Setback regulations for building will ordinarily eliminate any interference but easements for the poles will, in all cases, be required.

In areas where apartment or other buildings preclude this location due to inadequate clearances, the proposed pole line should be staked with street face three inches back of a future curb. If the future curb location cannot be ascertained, assume a five-foot sidewalk with abutting curb or street face of pole to be 4.75 feet from the R/W line into the street.

3. DOT Requirement

On all Federal, State and County maintained roads, all new pole lines should be installed at the R/W line, regardless of the distance from the through travel lanes.

© Copyright, 1980 FPL

Maximum soil pressures developed are calculated by the formula

$$p \text{ (tons per square foot)} = \frac{0.003\ R}{D \times d} \text{ where}$$

D = setting depth in feet and d = butt diameter in feet.

from the Figure: E = 0.22D and F = G = 0.34D

2. Lateral Bearing Strength of Soil

The following discussion uses values of soil strengths that are somewhat conservative. Therefore, calculations for pole upset should be limited to cases where poor soil strength conditions exist or where in good soils, poles not listed on TABLE A (i.e. transmission guy stubs) are used unguyed.

The lateral bearing strength of various soils cannot be listed precisely and completely because soils do not behave in this manner. Soils that look similar may have different values of bearing strengths, and soils may completely change characteristics as depth increases. The only sure method of finding these values is an actual test of the individual soils, procured from the depth in question. This test can be performed by a testing laboratory.

An approximate value can however be used if sufficient safety factors and good judgement are applied. A value of 1500 psf/ft. of depth can be applied to most cohesive Florida soils. Generally if the sides of an augered hole do not collapse, the stated value of 1500 psf/ft. can be used for upset calculations (this includes no Safety Factor). Some other values of lateral bearing strength to be used as a guide for estimating soil strengths are: rock 4000 psf/ft. and dry sand 500 psf/ft. Using these 3 figures and judgement, an approximate value for all soils can be arrived at. Remember to apply safety factors discussed on TABLE A to your calculations for pole strengths.

Applying the above to an example of an unguyed pole:

Example for soil bearing calculations:

40 ft. class 2 pole set at 6 ft. in soil judged to be approximately 800 lbs. per sq. ft./ft. of depth in lateral bearing strength. A force of 700 lbs. is acting at 33' above ground level.

Using tables for pole circumference d = 1.08'

W = 700 lbs; C = 33'; D = 6'

F = G = .34D = 2.04'; E = .22D = 1.32'

© Copyright, 1980 FPL

G. GUYS

Guy Strength - See DCS D-5.

1. Design Criteria

FPL uses the requirements of Table 261-5 of the NESC as their design criteria for guys. For Grade B construction, this requires that we load deadend guys to only 60% of their ultimate strength and side or transverse guys to 33.8%. The conductor deadend tensions used to determine guy size and number are located in DCS D-5. These tensions are the sum of conductor stringing tension and a 9 pound per square foot wind load on the conductor, per NESC. For examples of guying calculations, see pages 10, 11, and 13, this section.

2. Guy Material

FPL uses galvanized guys in non-salt areas and copperweld in salt areas. The galvanized guy is preferred over copperweld, because it is more economical. However, galvanized rusts rapidly in salt areas and therefore, copperweld is the FPL standard there. Some copperweld guys do exist in non-salt areas, because at one time that was the only type FPL installed. It should be noted that if the copper coating of copperweld is nicked, exposing the underlying steel layer, the steel will sacrifice to the copper. The copper coating is left intact but the steel will corrode away. This will reduce the holding strength of the guy even though most of the guy wire appears to be in good shape.

3. Fiberglass Guy Strain Insulators

Guy insulators are used to increase BIL on wood poles in non-salt spray areas whenever a guy is installed above the neutral for 13 kV and above. Insulators need not be installed where arresters are on the pole. Guy strain insulators are not to be installed in salt areas or on concrete poles, since all wood pole hardware is bonded to ground, and concrete pole hardware is effectively grounded. Their use would not increase BIL. Occasionally, there is an exception to this rule. When a galvanized screw anchor or a galvanized anchor rod is buried in moist earth saturated with salt or other electrolyte near buried copper or copperweld electrodes, excessive corrosion of the galvanized member may occur. When this condition is discovered, installing a guy strain insulator will break the path of galvanic current and reduce further corrosion.

© Copyright, 1980 FPL

6. Easements For Anchors

An easement should be secured for each anchor placed on private property. If the hole to place a concrete anchor will encroach on private property, then either an easement or permission should be secured before an attempt is made to place the anchor.

7. Retirement And/Or Removal

When an existing anchor is no longer required, it should be either cut off, or driven to 12" below finished grade and covered. When practical, screw anchors may be removed and re-used if in good condition; galvanizing should be intact. If there is a possibility of future excavation, then where possible, all anchors should be removed.

© Copyright, 1980 FPL

TABLE A-1

FPL CONDUCTORS

WIND LOAD IS MEASURED IN LBS/FT OF SPAN

$$\text{FORCE IN LBS/FT} = \left[\frac{\text{WIRE DIA. IN INCHES}}{12}\right] 9\#/\text{SQ. FT.}$$

WIRE SIZE	* O.D. IN INCHES	FORCE IN LBS./FT.
#6 COPPER	0.1620	0.122
#4 COPPER	0.2043	0.153
#4 ALUMINUM	0.2500	0.188
#2 COPPER	0.2920	0.219
#2 ALUMINUM	0.3160	0.237
#2 AL TREE WIRE	0.6560	0.492
#2 CU TREE WIRE	0.6322	0.474
1/0 COPPER	0.3680	0.276
#1/0 ALUMINUM	0.3980	0.299
#2/0 COPPER	0.4140	0.311
#3/0 ALUMINUM	0.5020	0.377
#4/0 COPPER	0.5220	0.392
#4/0 CU TREE WIRE	0.8617	0.646
#343.6 MCM ACAR	0.6840	0.513
#350 COPPER	0.6790	0.509
#568.3 MCM ACAR	0.8790	0.659
#568 AL TREE WIRE	1.2190	0.914
#4/0 CABLE SEC.	1.3760	1.032
#6 DUPLEX W/#4N	0.7040	0.528
#6 DUPLEX W/#6N	0.4760	0.357
#4 TRIPLEX	0.7040	0.528
#2 TRIPLEX	0.8290	0.622
#1/0 TRIPLEX	1.0650	0.799
#3/0 TRIPLEX	1.2680	0.951
#2 QUADRUPLEX	0.9270	0.695
#1/0 QUADRUPLEX	1.1900	0.893

* O.D. OBTAINED FROM DIST. STD. F-7A

© Copyright, 1980 FPL

TABLE A-2 FPL EQUIPMENT

WIND LOAD ON EQUIPMENT IS MEASURED IN LBS.

	SIZE	FORCE IN LBS.
TRANSFORMERS	10 KVA	29
	15 KVA	29.5
	25 KVA	33
	37 KVA	41
	50 KVA	49
	75 KVA	68
	100 KVA	70
	167 KVA	80
	FOR 2 PHASE BANK, ADD TX WIND LOADS FOR 3 PHASE BANK, BOUBLE WIND LOAD OF LARGEST TX	

	SIZE BANK	FORCE IN LBS.
CAPACITORS	1200 KVAR SWITCHED	112
	1200 KVAR FIXED	95

	SIZE	FORCE IN LBS.
REGULATORS 1 PHASE, POLE MTD.	76.2 KVA, 100 A	104
	167 KVA, 219 A	153

	SIZE	FORCE IN LBS.
RECLOSERS	1 PHASE (DCS C-7)	36
	3 PHASE (DCS C-8)	95

	WIND LOAD IS MEASURED IN LBS PER FT OF CONDUIT	
RISER CONDUITS	NOMINAL SIZE	FORCE IN LBS/FT ABOVE GRADE
	2"	1.7
	4"	3.2
	5"	3.9
	6"	4.7

	WIND LOAD IS MEASURED IN LBS PER FT OF RISER SHIELD	
RISER SHIELDS	NOMINAL SIZE	FORCE IN LBS/FT ABOVE GRADE
	4"	4
	5:	7

© Copyright, 1980 FPL

EXHIBIT C

FPL

P.O. Box 8248, Ft. Lauderdale, FL 33340-8248

May 15, 1992

Mr. John McPhail
Continental Cablevision
P.O. Box 1689
Pompano Beach, Fl. 33061

RE: **1992 CATV Pole Attachment Rate**

Dear John:

I am writing to let you know that FPL has a new rate schedule for CATV pole attachments in 1992. This rate will be effective for the June and December 1992 billings.

The 1992 CATV Pole Attachment Rate based on 1991 recorded data is $6.04 per pole, up from $5.93 for 1990 data. You will find attached the worksheets used in determining the rate.

Please feel free to contact me at (305) 321-2228, if you have any questions regarding the new CATV Pole Attachment Rate.

Sincerely,

Michael C. Dalton

Michael C. Dalton
Major Accounts Manager

MCD.bh

Attachment

FLORIDA POWER & LIGHT COMPANY

CALCULATION OF CABLE T.V. POLE ATTACHMENT RATE

FOR THE YEAR 1991

NET COST OF BARE POLE

ITEM	(a) Gross Plant	(b) Depreciation Reserve	(c) Net Plant	Reference
Account 364	$362,124,000	($137,011,000)	$225,113,000	Line 9+Ln 10 col(a) Page 2
Crossarms	54,318,600	(20,551,650)	33,766,950	Line 6*0.15
Net Pole	$307,805,400	($116,459,350)	$191,346,050	

Number of Poles	879,416	Mass Property Acct
Net Cost of Bare Pole	$191,346,050	Line 9 col (c)
Net Investment/# of Poles	$217.58	Line 14/Line 12

CAPITAL CARRYING CHARGE RATE

Depreciation Expense	4.83 %	Line 16 - Page 2
Administrative & General	3.87 %	Line 23 - Page 2
Operation & Maintenance	10.59 %	Line 29 - Page 2
Taxes	7.80 %	Line 43 - Page 2
Cost of Capital	10.40 %	Line 46 - Page 2
Total	37.48 %	

PERCENTAGE SPACE OCCUPIED BY ATTACHMENT

Space Occupied by Attachment	1 ft.	
Total Usable Space on Pole	13.5 ft.	FCC Order #83-562
Percentage (%)	7.407 %	Line 32/Line 33

MAXIMUM ALLOWABLE RATE

Bare Pole Investment X Usable Space X Capital Carrying Charge Rate	$6.04	Line 27*Line 34*Line 16

FLORIDA POWER & LIGHT COMPANY

CALCULATION OF CABLE T.V. POLE ATTACHMENT RATE

FOR THE YEAR 1991

1	CAPITAL CARRYING CHARGE RATE DETAIL				
2					Reference
3					
4	Net Utility Plant		$8,585,152,364		FERC Form 1 Page 110
5					
6		(a)	(b)	(c)	
7	Account ---->	364	365	369.1 OH	
8					
9	Gross Investment in OH	$362,124,000	573,977,000	$86,203,000	FERC Form 1 Page 337
10	Depreciation Reserve	(137,011,000)	(221,138,000)	(38,948,000)	FERC Form 1 Page 337
11					
12	Net Investment in OH	$225,113,000	$352,839,000	$47,255,000	
13					
14	Depreciation Rate (A/C 364) (%)		3.0		FERC Form 1 Page 337
15					
16	Depreciation Carrying Charge		4.83 %		Ln 9col(a)/Ln 12col(a)*Ln 14
17	(Gross Inv./Net Inv. X Depr. Rate				
18					
19	A & G EXPENSES				
20					
21	Total A & G Expenses		$332,169,035		FERC Form 1 Page 323
22					
23	A & G Carrying Charge (Ln 21/Ln 4)		3.87 %		Line 21/Line 4
24					
25	OPERATION & MAINTENANCE EXPENSE				
26					
27	Acct 593 Maintenance of Overhead Lines		$66,188,732		FERC Form 1 Page 322
28	Net Distribution Plant Related to Poles		$625,207,000		Line 12 cols (a)+(b)+(c)
29	O & M Carrying Charge		10.59 %		Line 27/Line 28
30					
31	Taxes				
32	A/C 408.1 Taxes Other Than Income		$486,939,826		FERC Form 1 Page 114
33	A/C 409.1 Income Taxes - Federal		186,133,814		FERC Form 1 Page 114
34	A/C 409.1 Income Taxes - Other		33,642,147		FERC Form 1 Page 114
35	A/C 410.1 Prov for Deferred Inc Taxes		155,899,829		FERC Form 1 Page 114
36	A/C 411.4 Investment Tax Credit Adj.-Net		(37,914,592)		FERC Form 1 Page 114
37	A/C 411.1 Prov for Deferred Inc Taxes-Cr		(154,871,811)		FERC Form 1 Page 114
38					
39	Total		$669,829,213		
40					
41	Net utility Plant in Service		$8,585,152,364		Line 4
42					
43	Taxes Paid Carrying Charge (Ln 40/Ln 42)		7.80 %		Line 39/Line 41
44					
45	Cost of Capital				
46	Maximum Allowable ROR		10.40 %		FPSC Order #13537

EXHIBIT D

Check appropriate box:

☒ Original signed form

☐ Conformed copy

Form Approved
OMB No. 1902-0021
(Expires 11/30/92)

FILED
OFFICE OF THE SECRETARY
92 APR 29 PM 12: 14
FEDERAL ENERGY
REGULATORY COMMISSION

FERC Form No. 1:
ANNUAL REPORT OF MAJOR ELECTRIC UTILITIES, LICENSEES AND OTHERS

This report is mandatory under the Federal Power Act, Sections 3,4(a), 304 and 309, and 18 CFR141.1. Failure to report may result in criminal fines, civil penalties and other sanctions as provided by law. The Federal Energy Regulatory Commission does not consider this report to be of a confidential nature.

PROPERTY OF REFERENCE
AND INFORMATION CENTER
DO NOT REMOVE

Exact Legal Name of Respondent (Company)	Year of Report
FLORIDA POWER & LIGHT COMPANY	Dec. 31, 19 91

48

COMPARATIVE BALANCE SHEET (ASSETS AND OTHER DEBITS)

Line No.	Title of Account (a)	Ref. Page No. (b)	Balance at Beginning of Year (c)	Balance at End of Year (d)
1	UTILITY PLANT			
2	Utility Plant (101-106, 114)	200-201	11,696,048,186	12,639,076,636
3	Construction Work in Progress (107)	200-201	476,278,942	597,401,026
4	TOTAL Utility Plant (Enter Total of lines 2 and 3)		12,172,327,128	13,236,477,662
5	(Less) Accum. Prov. for Depr. Amort. Depl. (108, 111, 115)	200-201	4,245,797,744	4,651,325,298
6	Net Utility Plant (Enter Total of line 4 less 5)		7,926,529,384	8,585,152,364
7	Nuclear Fuel (120.1-120.4, 120.6)	202-203	488,127,809	279,740,170
8	(Less) Accum. Prov. for Amort. of Nucl. Fuel Assemblies (120.5)	202-203	205,786,378	
9	Net Nuclear Fuel (Enter Total of line 7 less 8)		282,341,431	279,740,170
10	Net Utility Plant (Enter Total of lines 6 and 9)		8,208,870,815	8,864,892,534
11	Utility Plant Adjustments (116)	122		
12	Gas Stored Underground-Noncurrent (117)			
13	OTHER PROPERTY AND INVESTMENTS			
14	Nonutility Property (121)	221	4,840,548	4,081,738
15	(Less) Accum. Prov. for Depr. and Amort. (122)		462,700	119,810
16	Investments in Associated Companies (123)			
17	Investment in Subsidiary Companies (123.1)	224-225		
18	(For Cost of Account 123.1, See Footnote Page 224, line 42)			
19	Other Investments (124)		11,763,864	9,861,214
20	Special Funds (125-128)		243,525,453	284,676,387
21	TOTAL Other Property and Investments (Total of lines 14 thru 17,19,20)		259,667,165	298,499,529
22	CURRENT AND ACCRUED ASSETS			
23	Cash (131)		282,606	
24	Special Deposits (132-134)		525,539	2,207,192
25	Working Fund (135)		1,928,675	2,593,925
26	Temporary Cash Investments (136)			84,100,000
27	Notes Receivable (141)			
28	Customer Accounts Receivable (142)		322,213,511	354,192,331
29	Other Accounts Receivable (143)		40,793,757	56,897,041
30	(Less) Accum. Prov. for Uncollectible Acct.-Credit (144)		9,890,231	11,815,203
31	Notes Receivable from Associated Companies (145)			
32	Accounts Receivable from Assoc. Companies (146)		2,364,632	1,774,445
33	Fuel Stock (151)	227	162,375,135	82,210,786
34	Fuel Stock Expense Undistributed (152)	227	225,445	260,077
35	Residuals (Elec) and Extracted Products	227		
36	Plant Material and Operating Supplies (154)	227	257,827,211	277,561,792
37	Merchandise (155)	227	(5,631)	32,394
38	Other Materials and Supplies (156)	227		
39	Nuclear Materials Held for Sale (157)	202-203/227		
40	Stores Expenses Undistributed (163)	227	7,525,327	1,013,782
41	Gas Stored Underground - Current (164.1)			
42	Liquefied Natural Gas Stored (164.2)			
43	Liquefied Natural Gas Held for Processing (164.3)			
44	Prepayments (165)		32,646,308	34,596,054
45	Advances for Gas Explor., Devel., and Prod. (166)			
46	Other Advances for Gas (167)			
47	Interest and Dividends Receivable (171)		355,939	137,208
48	Rents Receivable (172)		5,972,963	7,525,353
49	Accrued Utility Revenues (173)		101,462,336	95,649,425
50	Miscellaneous Current and Accrued Assets (174)		4,231,830	2,639,793
51	TOTAL Current and Accrued Assets (Enter Total of lines 23 thru 50)		930,835,352	991,576,395

STATEMENT OF INCOME FOR THE YEAR

1. Report amounts for accounts 412 and 413, Revenue and Expenses from Utility Plant Leased to Others, in another utility column (i,k,m,o) in a similar manner to a utility department. Spread the amount(s) over lines 01 thru 20 as appropriate. Include these amounts in columns (c) and (d) totals.
2. Report amounts in account 414, Other Utility Operating Income, in the same manner as accounts 412 and 413 above.
3. Report data for lines 7, 9, and 10 for Natural Gas companies using accounts 404.1, 404.2, 404.3, 407.1, and 407.2
4. Use page 122 for important notes regarding the statement of income or any account thereof.
5. Give concise explanations concerning unsettled rate proceedings where a contingency exists such that refunds of a material amount may need to be made to the utility's customers or which may result in a material refund to the utility with respect to power or gas purchases. State for each year affected the gross revenues or costs to which the contingency relates and the tax effects together with an explanation of the major factors which affect the right of the utility to retain such revenues or recover amounts paid with respect to power and gas purchases.
6. Give concise explanations concerning significant amounts of any refunds made or received during the year

Line No.	Account (a)	(Ref.) Page No. (b)	TOTAL Current Year (c)	TOTAL Previous Year (d)
1	UTILITY OPERATING INCOME			
2	Operating Revenues (400)	300-301	5,158,766,379	4,987,689,706
3	Operating Expenses			
4	Operation Expenses (401)	320-323	2,890,750,005	2,762,957,736
5	Maintenance Expenses (402)	320-323	405,017,292	408,077,080
6	Depreciation Expense (403)	336-338	446,757,850	441,487,600
7	Amort. & Depl. of Utility Plant (404-405)	336-338	55,758,326	44,537,037
8	Amort. of Utility Plant Acq. Adj. (406)	336-338		
9	Amort. of Property Losses, Unrecovered Plant and Regulatory Study Costs (407)		4,584,464	5,144,346
10	Amort. of Conversion Expenses (407)			
11	Taxes Other Than Income Taxes (408.1)	262-263	486,939,826	450,236,964
12	Income Taxes - Federal (409.1)	262-263	186,133,814	105,475,421
13	- Other (409.1)	262-263	33,642,147	22,059,922
14	Provision for Deferred Inc. Taxes (410.1)	234,272-277	155,899,829	195,756,752
15	(Less) Provision for Deferred Income Taxes - Cr.(411.1)	234,272-277	154,871,811	117,501,180
16	Investment Tax Credit Adj. - Net (411.4)	266	(37,914,592)	(24,100,041)
17	(Less) Gains from Disp. of Utility Plant (411.6)		109,436	255,792
18	Losses from Disp. of Utility Plant (411.7)		22,653	36,438
19	TOTAL Utility Operating Expenses (Enter Total of lines 4 thru 18)		4,472,610,367	4,293,912,283
20	Net Utility Operating Income (Enter Total of line 2 less 19) (Carry forward to page 117, line 21)		686,156,012	693,777,423

ELECTRIC OPERATION AND MAINTENANCE EXPENSES (Continued)

Line No.	Account (a)	Amount for Current Year (b)	Amount for Previous Year (c)
103	3. DISTRIBUTION EXPENSES (Continued)		
104	(581) Load Dispatching	281,126	
105	(582) Station Expenses	4,831,260	5,328,892
106	(583) Overhead Line Expenses	20,004,318	24,362,220
107	(584) Underground Line Expenses	8,939,618	8,954,035
108	(585) Street Lighting and Signal System Expenses	2,617,943	2,346,696
109	(586) Meter Expenses	10,843,574	11,526,012
110	(587) Customer Installations Expenses	5,661,833	5,349,825
111	(588) Miscellaneous Expenses	37,122,241	37,130,848
112	(589) Rents	5,638,936	5,774,136
113	TOTAL Operation (Enter Total of Lines 102 thru 112)	123,204,015	127,995,524
114	Maintenance		
115	(590) Maintenance Supervision and Engineering	12,102,831	10,226,209
116	(591) Maintenance of Structures	1,235,343	978,191
117	(592) Maintenance of Station Equipment	9,786,060	7,956,151
118	(593) Maintenance of Overhead Lines	66,188,732	63,264,533
119	(594) Maintenance of Underground Lines	17,374,407	16,024,157
120	(595) Maintenance of Line Transformers	1,996,826	1,963,642
121	(596) Maintenance of Street Lighting and Signal Systems	6,012,245	5,267,681
122	(597) Maintenance of Meters	828,353	796,689
123	(598) Maintenance of Miscellaneous Distribution Plant	3,669,422	3,385,024
124	TOTAL Maintenance (Enter Total of Lines 115 thru 123)	119,194,219	109,862,277
125	TOTAL Distribution Expenses (Enter Total of Lines 113 and 124)	242,398,234	237,857,801
126	4. CUSTOMER ACCOUNTS EXPENSES		
127	Operation		
128	(901) Supervision	9,640,169	10,569,077
129	(902) Meter Reading Expenses	13,293,583	13,446,566
130	(903) Customer Records and Collection Expenses	85,688,865	80,128,766
131	(904) Uncollectible Accounts	23,718,517	14,910,532
132	(905) Miscellaneous Customer Accounts Expenses	705,506	(907,837)
133	TOTAL Customer Accounts Expenses (Enter Total of Lines 128 thru 132)	133,046,640	118,147,104
134	5. CUSTOMER SERVICE AND INFORMATIONAL EXPENSES		
135	Operation		
136	(907) Supervision	6,712,568	9,625,556
137	(908) Customer Assistance Expenses	42,251,342	27,231,499
138	(909) Informational and Instructional Expenses	6,837,873	5,506,676
139	(910) Miscellaneous Customer Service and Informational Expenses	5,092,342	4,695,398
140	TOTAL Cust. Service and Informational Expenses (Enter Total of lines 136 thru 139)	60,894,125	47,059,129
141	6. SALES EXPENSES		
142	Operation		
143	(911) Supervision	34,577	77,967
144	(912) Demonstrating and Selling Expenses	321,700	494,765
145	(913) Advertising Expenses		
146	(916) Miscellaneous Sales Expenses	151	
147	TOTAL Sales Expenses (Enter Total of Lines 143 thru 146)	356,428	572,732
148	7. ADMINISTRATIVE AND GENERAL EXPENSES		
149	Operation		
150	(920) Administrative and General Salaries	69,482,302	69,309,669
151	(921) Office Supplies and Expenses	33,351,433	38,216,480
152	(Less) (922) Administrative Expenses Transferred-Credit	650,942	1,022,190

ELECTRIC OPERATION AND MAINTENANCE EXPENSES (Continued)

Line No.	Account (a)	Amount for Current Year (b)	Amount for Previous Year (c)
153	7. ADMINISTRATIVE AND GENERAL EXPENSES (Continued)		
154	(923) Outside Services Employed	8,957,831	11,159,723
155	(924) Property Insurance	9,057,710	16,320,833
156	(925) Injuries and Damages	23,201,726	24,018,050
157	(926) Employee Pensions and Benefits	59,360,031	55,230,869
158	(927) Franchise Requirements		
159	(928) Regulatory Commission Expenses	2,381,082	3,072,404
160	(929) Duplicate Charges-Cr.	2,133,257	(2,133,257)
161	(930.1) General Advertising Expenses	64,699	237,681
162	(930.2) Miscellaneous General Expenses	109,879,264	23,120,883
163	(931) Rents	10,013,566	7,769,982
164	TOTAL Operation (Enter Total of Lines 150 thru 163)	327,231,959	245,301,127
165	Maintenance		
166	(935) Maintenance of General Plant	4,937,076	4,527,014
167	TOTAL Administrative and General Expenses (Enter Total of Lines 164 thru 166)	332,169,035	249,828,141
168	TOTAL Electric Operation and Maintenance Expenses (Enter Total of Lines 79, 99, 125, 133, 140, 147, and 167)	3,295,767,297	3,171,034,816

NUMBER OF ELECTRIC DEPARTMENT EMPLOYEES

1. The data on number of employees should be reported for the payroll period ending nearest to October 31, or any payroll period ending 60 days before or after October 31.
2. If the respondent's payroll for the reporting period includes any special construction personnel, include such employees on line 3, and show the number of such special construction employees in a footnote.
3. The number of employees assignable to the electric department from joint functions of combination utilities may be determined by estimate, on the basis of employee equivalents. Show the estimated number of equivalent employees attributed to the electric department from joint functions.

1	Payroll Period Ended (Date)	December 31, 1991
2	Total Regular Full-Time Employees	14,509
3	Total Part-Time and Temporary Employees	N/A
4	Total Employees	14,509

DEPRECIATION AND AMORTIZATION OF ELECTRIC PLANT (Continued)
C. FACTORS USED IN ESTIMATING DEPRECIATION CHARGES

Line No.	Account (a)	Depreciable Plant Base (In thousands) (b)	Estimated Avg. Service Life (c)	Net Salvage (Percent) (d)	Applied Depr. Rate(s) (Percent) (e)	Mortality Curve Type (f)	Average Remaining Life (g)	Accumulated Depreciation & Amortization (In thousands) (g1)
1	Cape Canaveral	103,570	33.0	(12.3)	3.3		16.1	48,720
2	Cutler	42,126	10.5	0.0	2.1		10.0	29,163
3	Ft Myers	65,374	25.0	(10.5)	3.1		13.2	48,689
4	Lauderdale	43,658	48.0	(5.7)	1.8		19.1	41,523
5	Manatee	365,861	29.0	(11.2)	4.4		16.7	171,844
6	Martin (See Note 1)	698,867	30.0	(8.0)	3.9		19.8	226,438
7	Palatka							(19)
8	Pt Everglades	222,912	30.0	(10.1)	3.9		14.4	112,903
9	Riviera 3 & 4	65,827	39.0	(12.5)	1.6		19.1	51,079
10	Riviera 2	1						1,008
11	Sanford	145,974	30.0	(11.2)	4.0		14.9	86,677
12	Scherer (See Note 2)	126,830			5.8			14,353
13	St Johns River P. Park							
14	Coal Cars (See Note 1)	2,876	13.8	(20.0)	6.4		13.5	1,138
15	St Johns River P. Park							
16	Excl Coal Cars(Note 1)	325,036	17.5	(12.5)	6.3		15.9	70,474
17	Turkey Point (Note 1)	87,366	30.0	(11.7)	3.5		15.2	54,582
18								
19	STEAM	2,296,278						958,572
20								
21	St Lucie (Note 3)	2,121,003	33.6	(6.0)	3.3		27.6	548,890
22	Turkey Point (Note 3)	1,218,856	23.2	(7.0)	4.9		17.6	325,624
23								
24	NUCLEAR	3,339,859						874,514
25								
26	Ft Myers GTs	59,295	25.0	(1.9)	3.0		9.5	45,850
27	Lauderdale GTs	83,003	30.0	(1.9)	1.1		11.5	60,738
28	Pt Everglades GTs	42,646	29.0	(1.6)	0.9		10.9	39,613
29	Putnam (See Note 1)	120,619	28.0	(1.9)	3.3		16.6	58,652
30								
31	OTHER	305,563						204,853
32								
33	350.2 (See Note 1)	88,451	65.0	0.0	1.6	S0	55.0	33,101
34	352 (See Note 1)	28,734	47.0	(15.0)	2.4	S4	38.0	10,131
35	353 (See Note 1)	557,354	35.0	20.0	2.0	R2	26.0	210,036
36	354 (See Note 1)	217,940	45.0	(15.0)	2.4	L0	38.0	154,797
37	355 (See Note 1)	273,637	40.0	(35.0)	3.1	R2	30.0	114,287
38	356 (See Note 1)	313,304	42.0	(35.0)	2.9	S1	32.0	185,354
39	357 (See Note 1)	26,166	46.0	0.0	2.1	S2	31.0	9,842
40	358 (See Note 1)	28,262	35.0	0.0	2.7	S3	19.5	14,264
41	359 (See Note 1)	43,128	65.0	0.0	1.5	SQ	55.0	13,369
42								
43	TRANSMISSION	1,576,976						745,181
44								
45	361 (See Note 1)	39,361	45.0	(5.0)	2.2	L3	36.0	9,425
46	362 (See Note 1)	567,401	40.0	5.0	2.1	S0	32.0	140,353
47	362 LMS (See Note 9)	26,812						6,920
48	364 (See Note 1)	362,124	36.0	(30.0)	3.0	L0	30.0	137,011
49	365 (See Note 1)	573,977	34.0	(35.0)	3.5	L1	27.0	221,138
50	366.6 (See Note 1)	308,343	50.0	0.0	2.0	S2	41.0	61,754
51	366.7 (See Note 1)	17,897	45.0	0.0	2.1	S3	37.0	4,137
52	367.6 (See Note 1)	389,554	28.0	20.0	2.7	R2	22.0	81,101
53	367.7 (See Note 1)	304,908	26.0	0.0	3.3	R3	16.9	142,262
54	368 (See Note 1)	789,622	28.0	(15.0)	4.1	S1	21.0	243,880
55	369.1 (See Note 1)	86,203	36.0	(60.0)	4.3	R1	27.0	38,948
56	369.7 (See Note 1)	217,690	34.0	(20.0)	3.5	R2	28.0	52,940
57	370 (See Note 1)	273,405	28.0	5.0	3.1	S3	18.3	109,102
58	370 LMS (See Note 9)	565						269
59	371 (See Note 1)	35,588	13.0	(20.0)	9.1	L0	10.7	9,295
60	371 LMS (See Note 9)	57,273						14,590
61	373 (See Note 1)	160,661	21.0	(20.0)	5.4	R1	15.3	61,280
62								
63	DISTRIBUTION	4,211,384						1,334,405

EXHIBIT E

CALCULATION OF MAXIMUM LAWFUL RATE
FLORIDA POWER & LIGHT CO.

1. **NET INVESTMENT IN POLES.** Net investment in poles may be expressed as the difference of gross pole investment minus pole depreciation reserve minus 15 percent of the investment reflecting that part of the gross plant attributable to crossarms and other items of investment not pole related

Gross Pole Investment	L1 =	$	362,124,000
Pole Investment Depreciation Reserve	L2 =	$	137,011,000
L1 - L2	L3 =	$	225,113,000
L3 x .85	L4 =	$	191,346,050

2. **NET INVESTMENT IN AVERAGE POLE.** The net investment per pole may be expressed as the quotient of net investment in poles divided by the number of poles from which net investment is calculated.

Number of Poles	L5 =		879,416
L4 / L5	L6 =	$	217.58

3. **CARRYING CHARGE.** The carrying charge consists of maintenance expense, depreciation, administrative expense, taxes, and cost of capital.

a. **MAINTENANCE EXPENSE.** The maintenance expense for poles may be expressed as a percent of net investment by dividing the annual pole, conductor, and services maintenance expense by the net investment in poles, overhead conductors, and services.

Pole and Conductor Maintenance Expense	L7 =	$	66,188,732
Overhead Conductor Investment	L8 =	$	573,977,000
Depreciation Reserve Overhead Conductors	L9 =	$	221,138,000