ORIGINAL

RECEIVED

JUN 2 3 1995

FEDERAL COMMUNICATIONS COMMISSION
OFFICE OF THE SECRETARY

Before the
FEDERAL COMMUNICATIONS COMMISSION
Washington, D.C. 20554

In the Matter of	)	
	)	
Digital Data Transmission Within	)	MM Docket No. 95-42
the Video Portion of Television	)	RM 7567
Broadcast Station Transmissions	)	

DOCKET FILE COPY ORIGINAL

COMMENTS OF THE NATIONAL ASSOCIATION OF BROADCASTERS AND THE CONSUMER ELECTRONICS GROUP OF THE ELECTRONIC INDUSTRIES ASSOCIATION

I. Introduction

The National Association of Broadcasters ("NAB")[1] and the Consumer Electronics Group of the Electronic Industries Association ("EIA/CEG")[2], (the "Joint Commenters") hereby submit these Comments in response to the Notice of Proposed Rule Making [3]("Notice") in the above-captioned proceeding. The Notice seeks comment on various issues regarding digital data transmissions within the video portion of the television picture. The Notice also indicates that it intends to consider the work of the National Data

[1] NAB is a nonprofit, incorporated association of radio and television stations and networks which serves and represents the American broadcast industry.

[2] EIA/CEG is the principal trade association of the consumer electronics industry. EIA/CEG members design, manufacture, import, distribute, and sell a wide variety of consumer electronics equipment, including television receivers and video cassette recorders.

[3] Notice of Proposed Rule Making in MM Docket No. 95-42, 10 FCC Rcd. 4918 (May 2, 1995).

No. of Copies rec'd 0+11
List ABCDE

Broadcasting Committee ("NDBC")[4]. Herein, the Joint Commenters submit into the record of this proceeding the work, to date, of the NDBC.

The Joint Commenters applaud the Commission for encouraging TV stations' use of data broadcasting technology. While we agree that standards are less necessary in closed systems (i.e., where the transmissions are intended for only specific subscribers), the Joint Commenters believe strongly that industry standards are needed for those signals that are intended to be delivered to the general public. The Joint Commenters established the National Data Broadcasting Committee ("NDBC") for the purpose of creating such standards.

II. NDBC Formation and Scope

In 1993, NAB and EIA formed the National Data Broadcasting Committee in order to develop voluntary national technical standards for high-speed data broadcasting using the NTSC television service as a delivery medium. These standards are intended to lead to the development of a Data Broadcasting Service that will be used for over-the-air delivery of data-based information services for business and public uses.

NAB and EIA formed the NDBC because we recognize that the development of voluntary national technical standards for Data Broadcasting calls for a single responsible party that could efficiently and effectively establish industry consensus and develop the required standards. We believe that a coordinated set of national technical standards is essential to the technical and business viability of a Data Broadcasting Service.

[4] Id. at ¶ 35.

Membership in the NDBC is open to the representatives of any company or organization that has a significant substantive U.S. commercial interest in the NDBC's proceedings.

III. Background

The NDBC's formation was announced by NAB and EIA in April, 1993 and the first meeting was held on September 16, 1993 at NAB headquarters in Washington D.C. The committee is co-chaired by Werner Wedam of Sharp Electronics Corporation and Lynn Claudy, of NAB. A Technical Requirements Working Group was formed at the initial meeting and was asked to develop a Request For Proposals ("RFP"), asking proponents of high speed data systems to submit applications. For the purposes of the NDBC's work, high-speed refers to the highest data rate and the most robust delivery mechanism attainable that will maintain data integrity and yet not result in the unacceptable degradation of the host NTSC signal or cause adverse interference to other NTSC signals.

The NDBC released the RFP in January, 1994. The Committee received five responses. Only two of the proponents, WavePhore, Inc, Tempe, AZ and Digideck, Menlo Park, CA, advanced to laboratory testing. Laboratory tests were conducted at the Advanced Television Test Center ("ATTC") in Alexandria, Va. over a four week period during the months of November and December, 1994. The laboratory test data was compiled by the NDBC Testing Working Group and was presented to the full NDBC at the January 30, 1995 meeting. After acceptance by the full Committee the data was passed to the Evaluation Working Group for analysis. This group prepared a report that was approved at the NDBC

meeting on April 28, 1995. The Testing Working Group and Evaluation Working Group reports are attached as Appendix A and B respectively.

IV. Current Status of the NDBC

Because the NDBC had earlier agreed that field tests were a necessary element in the system evaluations, the NDBC is now currently considering field test options. The Testing Working Group has prepared a field test plan and is in the process of locating a suitable test site. However, the full Committee has decided to allow WavePhore and Digideck to make improvements to their respective systems. This dictates that additional laboratory testing must be done before field tests commence.

V. Time Table for Future Developments

The NDBC expects to conduct the additional laboratory testing in the early fall of 1995. We expect field testing to be complete in December of 1995. Data analysis and report preparation will take approximately two months. Furthermore, it will likely take an additional three months to document and approve technical standards for digital data transmission. By this schedule, we expect the NDBC will complete its work in the second quarter of 1996.

VI. Conclusion

The Commission seeks comment on various issues regarding digital data transmissions, one of which is whether a technical standard should be set for such

transmissions. In order to establish such technical standards, we urge the Commission to consider the work of the NDBC, as it proposes, id. at ¶ 35, before taking final action in this proceeding.

Respectfully submitted,

NATIONAL ASSOCIATION OF BROADCASTERS
1771 N Street, N.W.
Washington, D.C. 20036

Lynn D. Claudy
Sr. Vice President, Science & Technology

Valerie Schulte
Of Counsel

Kelly Williams
Director of Engineering

Christine J. Newcomb
Legal Intern

ELECTRONIC INDUSTRIES ASSOCIATION
CONSUMER ELECTRONICS GROUP

Matthew J. McCoy, Staff Vice President
Government and Legal Affairs

George Hanover, Staff Vice President
Engineering

June 23, 1994

Appendix A

NATIONAL DATA BROADCASTING COMMITTEE

Results of Tests on
WavePhore and Digideck Systems
November 28 - December 21, 1994

Submission from
NDBC Testing Working Group
to NDBC Evaluation Working Group

March 2, 1995

Table of Contents

Item		Page
Section I.	Test Plan	1
Section II.	Test Results	2-10
	Transmission Tests - WavePhore	11-30
	Transmission Tests - Digideck	31-46
	Objective Tests - WavePhore	47-56
	Objective Tests - Digideck	57-66
	Quality Tests - WavePhore	67-73
	Quality Tests - Digideck	74-80
	Other Tests - WavePhore	81-85
	Other Tests - Digideck	86-89

SECTION I

TEST PLAN

NTSC+ DATA BROADCASTING

Laboratory Evaluation of Transmission System

Test Plan

Version 2.0

1. INTRODUCTION

This paper describes a preliminary test plan for the laboratory evaluation of the NTSC+ data broadcasting transmission systems. This test plan includes the evaluation of the main criteria selected by the NDBC evaluation group. This list is annexed as a reference. The tests will have Reference numbers corresponding to the criteria of the list. This test plan is to be used in conjuction with the "Index of Tasks for Individual Tests," Rev. 12/22/94[1] included in Section II of this report.

2.0 TEST AND MEASURING EQUIPMENTS

Each proposed system will be tested with and without the presence of impairments and interferences. Impairments testing determines the susceptibility of a "desired" signal, provided by the system under test, to various transmission impairments that are simulated in the laboratory. These include random noise, impulse noise and static and dynamic multipath. Interference testing involves two signals -- a "desired" signal and an "undesired" signal. The signal provided by the proponent system is tested as both desired and undesired, with respect to an NTSC signal. Data relating to bit error rate (BER), video and audio degradation under a number of different RF power levels will be recorded. In addition, various objective tests, such as frequency response, group delay, differential gain and phase, etc., to characterize the NTSC+ data system will be conducted.

2.1 Laboratory Set-up

The equipment set-up for these tests is illustrated in Figure 1. Figure 1 encompasses the transmitter, the channel simulator and the receiver. The proponent is expected to furnish its own encoder, demodulator and decoder. In the case of Digideck an exciter is also required at the encoder and is expected to be furnished by the proponents. Video sources include video test signals as well as real television pictures. Audio sources are CD or R-DAT players with typical audio test signals and program material. An HP-3784A (or similar) is used as the PRBS data generator and BER meter.

The data broadcasting encoders that insert the data signal into the VBI or the baseband video (*i.e.*, BleuMont, Centris, RTT, and Wavephore) shall receive from and provide to the testing facility baseband NTSC video, which shall be modulated to IF and up-converted to the appropriate VHF and/or UHF broadcast channel by the testing facility. The encoder that inserts the data signal at IF (Digideck, which requires a special SAW filter in the IF exciter) shall receive baseband NTSC video from the testing facility but shall provide

---

[1] In case of discrepancy between this Test Plan and the Index, the Index shall supersede the Test Plan. Unless, otherwise specified in either this Test Plan or the Index, the procedures to be followed shall be in accordance with the draft Grand Alliance System Test Procedures (Doc. SSWP2-1306) developed by the FCC Advisory Committee on Advanced Television Service.

an IF signal to the testing facility. All data broadcasting decoders shall receive from the testing facility an RF signal on the appropriate VHF and/or UHF broadcast channel. Each proponent shall provide a tuner and demodulator which the proponent considers representative of a typical installation of the decoder.

The interferences are created by a second video source with an NTSC modulator typical of the state-of-the art for a broadcast exciter. A random noise generator and an RF channel simulator, preferably an HP-11759D, are used to produce the desired impairments.

All signals (NTSC, NTSC+ data, noise) are added together in a combiner which is connected to the NTSC demodulator and data broadcasting decoder for objective tests and BER measurements. The RF output of the combiner is connected to a variety of typical NTSC receivers subjective audio and video testing. The data output of the data broadcasting decoder is connected to the BER meter.

When NTSC is the desired signal, the aural carrier power is set at 5% of (13 dB below) the visual peak power. When NTSC is the undesired signal, aural power is set at 20% of (7 dB below) the visual peak power. For all tests, the visual/aural power ratio of the NTSC+ signal shall be set at 7 dB.

As previously stated, the evaluation of each system is done subjectively and objectively. The extent of the subjective testing of each system may depend upon the results of objective measurements and analysis of that system's documentation. The subjective evaluation is done by at least three expert observers (consensus of at least 2 out of 3 observers is required). Tests are generally performed with and without the sequence of data included in the NTSC+ signal generated by the Data Broadcasting system and with and without the proponent equipment in the signal path.

For subjective tests of basic video quality compatibility (unimpaired), a variety of static and dynamic test material shall be used. For subjective tests of degradation due to interference or impairment, the video used for the desired signal shall be chosen to be sensitive to the interference or impairment being investigated. The video used for the undesired signal shall be chosen to emphasize the interference with the desired signal.

The objective measurements include the unweighted signal-to-noise ratio and noise spectrum, the pulse-to-bar ratio, the 2T K factor, the luminance non-linearity, the group delay, the frequency response, the differential phase and gain, and the 12.5 T chrominance/luminance gain and delay, as recorded by a Tektronix VM-700 and data throughput and BER measurements with the appropriate device.

3.0 TEST PROCEDURES

The following procedures are intended to verify the NTSC+ data broadcasting system performance with regard to its compatibility with NTSC host system, its out-of-channel emissions, and its effect on adjacent VBI lines. These test procedures are also intended to determine the NTSC+ system performance under various interference and impairment conditions.

3.1 Compatibility with the Host NTSC System

The following tests are to verify the effect of the data broadcasting on the host NTSC system or the compatibility of the two systems (**NTSC+** data broadcasting and NTSC).

3.1.1 Degradation to Host NTSC System (video and audio)

This test is intended to subjectively characterize the degradation to the host NTSC signal by using the 5 level CCIR impairment scale and objective measurements as appropriate. Specifically, the test scores the video and audio quality of the NTSC signal "Before" and "After" adding the data broadcasting signal under two signal level conditions (-15 & -55 dBm). Experts Observations and Commentaries (EO&C) are also recorded.

Step 1. Video and audio quality is scored using CCIR Impairment scale when the data broadcasting signal is **off**. The test is conducted using a desired signal level of -15 dBm. Collect objective measurements.

Step 2. Video and audio quality is scored using CCIR Impairment scale when the data broadcasting signal is **on**. The test is also conducted using desired signal level of -15 dBm. EO&C recorded. Collect objective measurements.

Step 3 Repeat steps 1 and 2 using a desired signal level of -55 dBm.

3.1.2 Out-of-Channel Emissions

This test is intended to examine the RF signal of the **NTSC+** data system and compare it to the host NTSC system. The analysis is conducted using various plots from the spectrum analyzer.

3.1.3 Compatibility with existing VBI lines

This test is intended to verify that the **NTSC+** data system does not disrupt existing VBI operations such as closed captioning, Extended Data Services and GCR signal.

Interference into closed captioning, if any, is determined by measuring noise level and spectrum on line 21 "before" and "after" adding the data broadcasting signal and ensuring that the closed caption and XDS signals is properly decoded.

Interference into GCR signal, if any, is determined by measuring noise level and spectrum on line 19 "before" and "after" adding the data broadcasting signal and ensuring that the GCR signal is properly decoded.

3.2 Interference

The following tests are to intended to determine the performance of the data broadcasting on the NTSC system or the compatibility of the two systems (**NTSC+** data broadcasting and NTSC under various interference and impairment conditions. These tests

are conducted at different desired/undesired signal level (D/U), and the levels of interference at the threshold of visibility (TOV) is recorded and the audio degradation is noted. The level of interference for a bit error rate (BER) = 10^{-5} is also recorded when the **NTSC+** is the desired signal.

3.2.1 Co-channel

The purpose of this test is to determine the performance of the data broadcasting system (NTSC) in the presence of co-channel interference and to determine the extent to which an **NTSC+** signal will interfere with a co-channel NTSC signal. The test is to be conducted with the desired signal at the weak signal condition (-55 dBm). When NTSC is the desired signal, the best case offset condition (10,010 Hz) shall be used. When **NTSC+** is the desired signal, the offset shall be 10,040 Hz. When NTSC is the desired signal, TOV and associated audio interference are to be recorded and when **NTSC+** is the desired signal, BER measurements are to be recorded.

Step 1. Using **NTSC+** as both the desired and undesired signal, increase the undesired NTSC signal level and record that level at TOV. This test provides a baseline for the rest of the test in this section.

Step 2. Repeat step 1 using desired and undesired signals as indicated in the matrix below. For each, record the change in BER or signal level at TOV as appropriate. The test should be performed with data on in **NTSC+** signal.

Desired Signal	Undesired Signal
NTSC	NTSC+
NTSC+	NTSC
NTSC+	NTSC+

3.2.2 Adjacent-Channel

The purpose of this test is to determine the performance of the data broadcasting system (**NTSC+**) in the presence of interference from a distant upper and lower adjacent signal and to determine the extent to which an **NTSC+** signal will interfere with an adjacent channel signal. The tests are to be conducted with the desired signal at the weak signal condition (-55 dBm). The undesired signal frequency shall be offset toward the desired frequency by 22,000 Hz. When NTSC is the desired signal, TOV and associated audio interference are to be recorded and when **NTSC+** is the desired signal, BER measurements are to be recorded.

Step 1. Using NTSC as both the desired and undesired signal and with the desired signal set at the weak level (-55 dBm), increase the undesired upper adjacent NTSC signal level and record that level at TOV. This test provides a baseline for the rest of the tests in this section.

Step 2. Repeat steps 1 using desired and undesired signals as indicated in the matrix below. For each, record the change in BER or signal level at TOV as appropriate. The test should be performed with data on and in **NTSC+** signal.

Desired Signal	Undesired Signal
NTSC	NTSC+
NTSC+	NTSC
NTSC+	NTSC+

Step 3. Repeat steps 1 and 2 for lower adjacent signals.

3.3 Susceptibility to Noise

It is a well known fact that noise in the transmission environment exists in two general forms -- random and impulsive. The effect of both of these forms are evaluated in the tests described below.

3.3.1 Random-Noise

The C/N at BER = 10^{-5} is determined when **NTSC+** is desired at the strong signal level (-15 dBm). BER measurements are also recorded at different random noise levels bracketing the TOV level to produce BER versus C/N level plot.

3.3.2 Impulse Noise

3.3.2.1 Introduction

Impulse noise occurs intermittently, and perhaps only briefly, but not often at such amplitude that the desired signal is obliterated. Noise impulses may be created by automotive ignition systems or motor-driven electrical appliances. The effect of such impulses on a data transmission system is to create burst errors, the duration of which may exceed the correction capability of the system. The effect may be quite different from that of random noise, which produces a uniform distribution of digital errors.

3.3.2.2. Setup

The setup for this test is similar to that for the random noise test. The impulse noise generator, rather than the random noise generator, is selected at the Undesired signal. The source of the impulse noise is a universal AC motor running at a constant load. The noise is picked up inductively from the motor, amplified, and band pass filtered into the television channel of interest.

3.3.2.3 Measurement Technique

This procedure is segmented into two phases. The first phase is calibration, using a standard NTSC transmission path. The calibration need be performed only once, prior to the testing of any proponent NTSC+ Data System, in order to determine the levels of impulse noise impairment at which all proponent systems are to be tested.

3.3.2.3.1 Calibration

Connect the source of the NTSC test signal to the NTSC modulator. Set the equipment to provide the Desired NTSC test signal. Connect the output of the RF impulse noise generator through a pass-band filter, to one input of an RF Combiner. Connect the output of the NTSC Modulator to the other input of the RF Combiner to the RF distribution system, feeding the assortment of NTSC receivers.

With the noise generator output fully attenuated, set the carrier level supplied to each receiver to -35dBm (Moderate level).

At the direction of expert observers, adjust the amplitude of the impulse noise to the point at which the observers feel it is a just-perceptible artifact on half of the NTSC receivers (the median TOV), then increase the level of the noise until the observers feel that half of the receivers have reached the point of unusability (POU). Finally, the observers shall determine four subjectively equal increments of impairments (referred to as TOV+1, TOV+2, TOV+3, and TOV+4) between TOV and POU.

This sets the power levels of the impulse noise generator.

3.3.2.3.2 NTSC+ Data System Test

Insert the NTSC+ Data System into the signal path.

With the output of the impulse noise generator fully attenuated, adjust the NTSC+ Data signal level to the "Moderate" level. Then, restore the impulse noise to the calibrated power level (the median TOV).

Measure the BER of the received data signal at this level of the impulse noise. Also measure the BER at the four increment of impairments above the TOV level, in order to determine the BER versus impulse noise characteristics.

3.4 Multipath

The purpose of Multipath testing is two-fold. the first is to determine whether the data broadcasting system is robust in the presence of multipath conditions. The second is to determine whether the addition of the data broadcasting system further degrades the NTSC host signal in the presence of multipath, and, in particular whether it impairs the ability of ghost canceling to function properly. The test will evaluate the video and audio quality with and without ghost canceling. The BER of the data broadcasting system will also be measured under the specified multipath conditions.

The multipath ensembles to be selected will consider the ones used for the NTSC ghost canceler laboratory test completed at the Communications Research Center (CRC) in January 1992 as well as, the ATV transmission subsystem tests. The picture and the audio quality rating are recorded using the CCIR impairment scale. The BER is determined for each ensemble when NTSC+ is desired.

Step 1. Evaluate the video quality with each multipath ensemble for the NTSC+ Data System with NTSC as a reference, when the data is on and ghost canceler is off. Make BER measurements.

Step 2. Evaluate the video quality with each multipath ensembles for the NTSC+ Data System with NTSC as a reference, when the data is on and ghost canceler is on. Make BER measurements.

3.5 Program Recordability

The general objective of this test is to verify the recordability of the proposed NTSC+ Data Systems such that a television program could be produced on video tape with embedded data that could reliably be reproduced for broadcasting with no perceptible degradation to the host NTSC signal.

The formats to be tested shall be representative of the recording formats currently in wide usage within the broadcast industry for program origination. Two formats, D2 and either Betacam SP or digital Betacam, shall be tested.

Step 1 - Encoder Setup/Recording

As shown in Figure 1 below, the data output of the Data Generator is connected to the data input of the data broadcast encoder under test. The output of the data broadcasting encoder is connected to a video distribution amplifier whose outputs are connected to the video input of each of the video recorders. For each NTSC+ Data System under test, all of the video recorders are started and a test data sequence is initiated on the data generator.

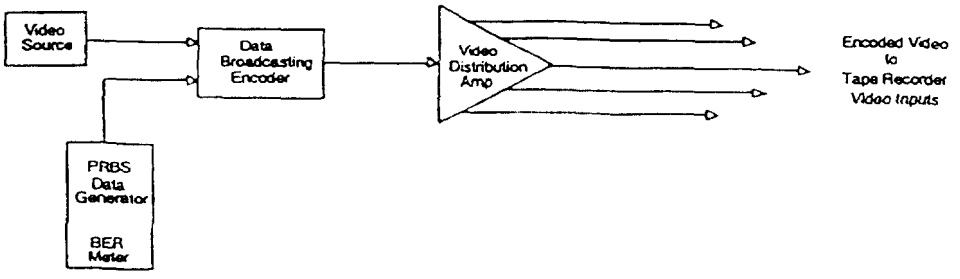

Figure 1: Equipment Setup for NTSC+ Data Recording

Step 2. Verification/Playback

After a short recording of approximately five minutes, each of the professional video-recorders played back in turn, with its video output connected to the input of the data broadcast receiver under test. The data (and clock) outputs of the system under test are input to the BER meter to verify the data recorded in Step 1 is reliably reproduced by the recording for both professional and VHS format, the reproduced video and audio is monitored by trained observers for any perceptible visual and/or audible artifacts caused by the addition of data by the system under test.

3.6 Latency & Acquisition Time

Latency is the time elapsed from the initial presentation of an event to an operating system's input modulating stimulus interface terminals to the reproduction of the identical event at the operating system's output interface terminals. It is expected that the operating system be configured in an operational environment.

Method of measurement. The operating system should be brought from fully powered down to operating condition over five minutes. Using a data string generator (e.g. Pseudo-random bit sequence generator), the initial input modulating stimulus to the operating system encoder should present a continuous, non-interrupted data string of at least 2**24 zeros.

The data interface input and output terminals of the operating system should be monitored with a storage-type of oscilloscope. One channel of the oscilloscope should monitor the operating system's input modulating stimulus data interface terminal and trigger

on the 50% point of the leading edge of the event (a zero-to-one transition). The second channel of the oscilloscope should monitor the operating system's data interface output terminals. The time base, or sweep time, of the oscilloscope should be adjusted to display the leading edge of both the input and output pulses. The time measured between the 50% points of the leading edges shall be defined to be the system latency.

The Acquisition Time is the time an operating system requires to reproduce an input modulating stimulus at the operating system decoders's output interface terminals after the signal into the operating system decoder has been reestablished. It is expected that the operating system be configured in an operational environment.

Method of measurement. The operating system should be brought from fully powered down to operating condition over five minutes. Using a data string generator, the initial input modulating stimulus to the operating system encoder should present continuous, non-interrupted a data string of at least 2**24 zeros.

The Acquisition Time should be measured by interruption of the input signal to the operating system.

After the operating system has been brought to operating conditions with establishment of a signal and data pathway form encoder input to decoder output, the (RF or IF) input signal to the operating system decoder should be interrupted by returning the operating system signal acquisition stage to a similar coherent signal (e.g., at another signal source frequency), but absent the data necessary for the operating system's decoder. After the operating system decoder has been parked on the alternate signal for at least ten seconds, the operating system should then be returned to the original signal source to acquire the desired signal that contains the necessary data.

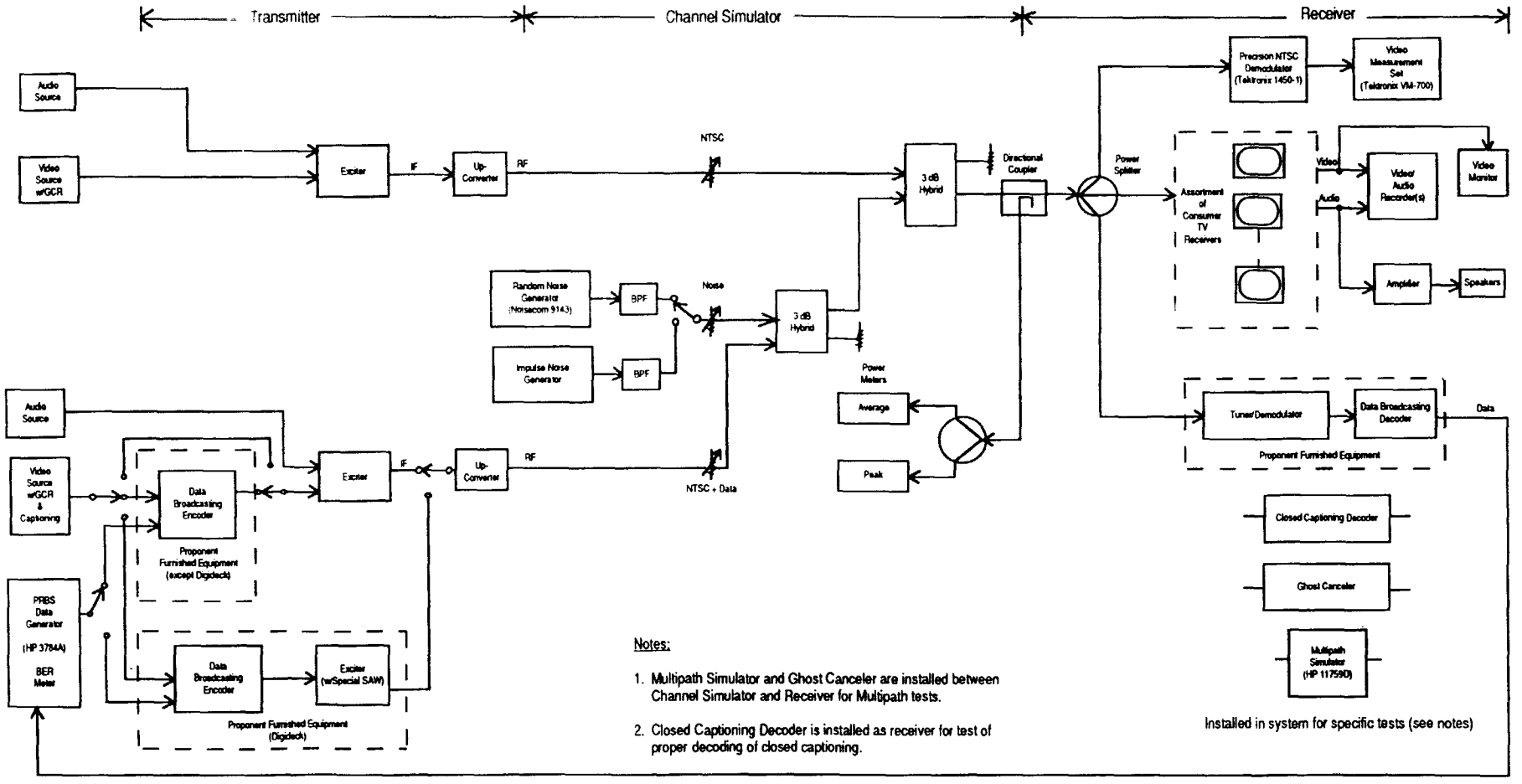

Notes:

1. Multipath Simulator and Ghost Canceler are installed between Channel Simulator and Receiver for Multipath tests.
2. Closed Captioning Decoder is installed as receiver for test of proper decoding of closed captioning.

Figure 1: Equipment Setup for Laboratory Evaluation

ATTC
Rev. 12/94
cpt

SECTION II

TEST RESULTS

Testing of National Data Broadcasting Committee Proponent Systems

Index of Tasks for Individual Tests

(see page 10 for Legend of terms)

All tests will be conducted in accordance with NDBC Test Procedures, with notations as included.

Transmission Tests

Co-Channel

TEST	D LVL	SUB-TEST				NOTES
		TOV	Audio *	BER	EO&C	
Co-channel (10,010Hz ** Offset) NTSC into NTSC	W -55dBm	✓	✓			NDBC ¶3.2.1 3 Expert Observers
Co-channel (10,010Hz ** Offset) NTSC + Data (Data On) into NTSC	W -55dBm	✓	✓			NDBC ¶3.2.1 3 Expert Observers
Co-channel (10,040Hz *** Offset) NTSC into NTSC + Data (Data On)	W -55dBm			✓		NDBC ¶3.2.1 BER = $1x10^{-5}$ and at 4 additional levels in 1-dB steps surrounding $1x10^{-5}$ level.
Co-channel (10,040Hz *** Offset) NTSC + Data (Data On) into NTSC + Data (Data On)	W -55dBm			✓		NDBC ¶3.2.1 BER = $1x10^{-5}$ and at 4 additional levels in 1-dB steps surrounding $1x10^{-5}$ level.

✓ Data to be taken in test plan for National Data Broadcasting Committee proponent systems evaluation.

* Audio degradation to CCIR 4 impairment level

** Best case offset visually

*** Worst case offset, visually, but may have no effect on data.

Transmission Tests

Noise

TEST	D LVL	SUB-TEST					NOTES
		TOV POU RNG	Audio *	BER		EO &C	
Random (White) Noise into NTSC + Data (Data On)	S -15dBm			✓			BER = $1x10^{-5}$ and at 4 additional levels in 1-dB steps surrounding $1x10^{-5}$ level. NDBC ¶3.3.1
Random (White) Noise into NTSC + Data (Data On)	W -55dBm			✓			BER = $1x10^{-5}$ and at 4 additional levels in 1-dB steps surrounding $1x10^{-5}$ level. NDBC ¶3.3.1
Impulse Noise Universal AC Motor into NTSC	M -35dBm	✓					NDBC ¶3.3.2 One-time test to determine levels for testing both NTSC+ Data systems. 3 Expert Observers
Impulse Noise Universal AC Motor into NTSC + Data (Data On)	M -35dBm			✓			At 5 levels, NTSC TOV and four ranging levels above TOV. NDBC ¶3.3.2

✓ Data to be taken in test plan for National Data Broadcasting Committee proponent systems evaluation.

* Audio degradation to CCIR 4 impairment level.

Transmission Tests

Upper Adjacent Channel

TEST	D LVL	SUB-TEST				NOTES
		TOV	Audio *	BER	EO&C	
Upper Adjacent NTSC into NTSC	W -55dBm	✓	✓			NDBC ¶3.2.2 3 Expert Observers
Upper Adjacent NTSC + Data (Data On) into NTSC	W -55dBm	✓	✓			NDBC ¶3.2.2 3 Expert Observers
Upper Adjacent NTSC into NTSC + Data (Data On)	W -55dBm			✓		NDBC ¶3.2.2 BER = $1x10^{-5}$ and at 4 additional levels in 1-dB steps surrounding $1x10^{-5}$ level.
Upper Adjacent NTSC+ Data (Data On) into NTSC + Data (Data On)	W -55dBm			✓		NDBC ¶3.2.2 BER = $1x10^{-5}$ and at 4 additional levels in 1-dB steps surrounding $1x10^{-5}$ level.

✓ Data to be taken in test plan for National Data Broadcasting Committee proponent systems evaluation.

* Audio degradation to CCIR 4 impairment level.

For all Upper Adjacent tests, Undesired Carrier Frequency is offset toward the Desired carrier frequency by 22kHz ("toe-in").

Lower Adjacent Channel

TEST	D LVL	SUB-TEST				NOTES
		TOV	Audio *	BER	EO&C	
Lower Adjacent NTSC into NTSC	W -55dBm	✓				NDBC ¶3.2.2 3 Expert Observers
Lower Adjacent NTSC + Data (Data On) into NTSC	W -55dBm	✓				NDBC ¶3.2.2 3 Expert Observers
Lower Adjacent NTSC into NTSC + Data (Data On)	W -55dBm			✓		NDBC ¶3.2.2 BER = $1x10^{-5}$ and at 4 additional levels in 1-dB steps surrounding $1x10^{-5}$ level.
Lower Adjacent NTSC+ Data (Data On) into NTSC + Data (Data On)	W -55dBm			✓		NDBC ¶3.2.2 BER = $1x10^{-5}$ and at 4 additional levels in 1-dB steps surrounding $1x10^{-5}$ level.

✓ Data to be taken in test plan for National Data Broadcasting Committee proponent systems evaluation.

* Audio degradation to CCIR 4 impairment level..

For all Lower Adjacent tests, Undesired Carrier Frequency is offset toward the Desired carrier frequency by 22kHz ("toe-in").

Transmission Tests

Multipath

TEST Effect of Multipath	D LVL	SUB-TEST VIDEO	AUDIO	BER	EO &C	NOTES
Multipath Susceptibility of NTSC + Data	-38dBm					NDBC ¶3.4
• Ensemble #1 0.1, 1.0, 6.0, 20μs				✓		4 Multipath Ensembles per specification on page 10
• Ensemble #2 0.2, 1.9, 3.9, 8.2μs				✓		BER = 1×10^{-5}
• Ensemble #3 1.0 at 2Hz				✓		
• Ensemble #4 0.1, -0.7, 4.0μs				✓		

✓ Data to be taken in test plan for National Data Broadcasting Committee proponent systems evaluation.

Transmission Tests

Multipath

TEST Effect of Multipath	D LVL	SUB-TEST VIDEO	AUDIO	BER	EO &C	NOTES
Multipath Quality Degradation of Host Signal	-38dBm					NDBC ¶3.1.3
• Without Ensemble						4 Multipath Ensembles per specification on page 10.
NTSC + Data On versus NTSC						One video image M10, Times Square, and 30 seconds of Audio, A8, Male Speech, A3, Glockenspiel and Silence. Output of Tektronix Demod. for Video tests. Output of Tektronix Demod plus Modulation Sciences SRD-1 for Audio tests.
• GCR On		✓				
• Ensemble #1						
0.1, 1.0, 6.0, 20μs						
NTSC + Data On versus NTSC						
• GCR Off						
• GCR On		✓	✓			2 Expert Obervers
• Ensemble #2		✓				
0.2, 1.9, 3.9, 8.2μs						NDBC ¶3.4
NTSC + Data On versus NTSC						
• GCR Off		✓	✓			
• GCR On		✓				
• Ensemble #3						
1.0 at 2Hz						
NTSC + Data On versus NTSC						
• GCR Off		✓	✓			
• GCR On		✓				
• Ensemble #4						
0.1, -0.7, 4.0μs						
NTSC + Data On versus NTSC						
• GCR Off		✓	✓			
• GCR On		✓				

✓ Data to be taken in test plan for National Data Broadcasting Committee proponent systems evaluation.