Working Group T1E1.1 on Analog Access, which developed this standard, had the following participants:

Gary Tennyson, Chairman
Trone Bishop, Vice-Chairman
Martin Moody, Editor

Leroy Baker
Curtis Brownmiller
Dick Bobilin
Don Bowey
William Buckley
Larry Carl
Frinel Fainaru
Severin Godo
Hal Holzwarth
Ed Horiuchi
Ralph Jensen
Leo Katz
George Lawrence
Frank McCaughey
Gunter Neumeier
Ed Polansky
Ron Provost
Chuck Seto
Jonathan Smith
C. Terry Throop
Mohammad Vakili
Dick van Gelder
Robert Welborn
Bernard Worne
Irvin Youngberg

American National Standard
for Telecommunications –

Interface between Carriers and Customer Installations – Analog Voicegrade Enhanced 911 Switched Access Using Network-Provided Reverse-Battery Signaling

1 Scope, purpose, and application

1.1 Scope

This standard provides interface requirements for the connection of a Customer Installation (CI), such as Private Branch Exchanges, to an Enhanced 911 system. The interface allows the CI to transmit caller's emergency service identification (CESID) information to an Enhanced 911 system in applications in which multiple terminals share Enhanced 911 switched access. The requirements of this standard apply at the Network Interface (NI). The NI is the point of interconnection between the telecommunication carrier network (the Network) and the customer premises wiring and equipment (the CI). The requirements cover the electrical characteristics of the Network and the CI and the interactions necessary for a CI to complete a call through an Enhanced 911 system. The voicegrade transmission performance of the network or the CI is not covered.

The reverse-battery signaling interface described in this standard is for outgoing calls only and employs a network-provided battery source. It is significantly different than the interface described in ANSI T1.405, which describes an interface that uses loop reverse-battery signaling with a CI-provided battery source.[1)]

NOTE – Although some existing interfaces use other signaling methods, such as E&M signaling, the objective of this standard is the use of network-provided reverse-battery signaling.

Multiple carriers may be involved in providing the transmission and signaling paths between the CI and the Enhanced 911 system. The interface between the carrier and the Enhanced 911 system or intermediate carrier-to-carrier interfaces are not covered in this standard.

The signals that the network presents at the NI are basically of two types: normal telecommunications system voltages and currents, and voltages and currents due to maintenance activities. These are specified in this standard. Abnormal voltages and currents that are the result of the environment (e.g., induced voltages and currents or lightning) are not covered in this standard.

Tariffs, contracts, or regulatory acts in various jurisdictions may contain additional or more stringent requirements than those in this standard.

1.2 Purpose

This standard provides carrier-to-CI interface requirements for analog voicegrade Enhanced 911 switched access using reverse-battery signaling with a network-provided battery source. These requirements are intended to assist carriers, end-users, and manufacturers.

1.3 Application

This standard assumes the existence of an Enhanced 911 system that provides emergency call services to the CI location.

[1)] When Enhanced 911 switched access is implemented via DS1 using robbed-bit signaling, the signaling states are the same as those transmitted by an interface historically known as Dial Pulse Originating (DPO) that is described in ANSI/EIA/TIA 464-A-1989.

The interface described in this standard provides a means for the CI to transmit the CESID to an Enhanced 911 system when multiple CI terminals share Enhanced 911 switched access. The CESID permits the Enhanced 911 system to route the call to the Public Safety Answering Point (PSAP) serving the CESID location and to provide the PSAP with CESID and location information. To utilize the interface described in this standard, the CI must provide a callback number for each terminal.

In addition, the CI must be capable of recognizing a request for emergency service, identifying the CESID, initiating a request for service by applying an off-hook signal, and transmitting the called number and CESID to the Enhanced 911 system using the multi-frequency signaling protocol specified in this standard. The interface described in this standard may only be used for placing calls to Enhanced 911 systems.

Because of the wide range of Enhanced 911 systems, carrier-provided plant, and CIs, conformance with this standard does not guarantee interface compatibility under all possible operating conditions. In addition, the interface described in this standard may not be universally available.

2 Definitions, abbreviations, acronyms, and symbols

2.1 Definitions

2.1.1 called-number outpulsing state: A call state in which the CI transmits the called number.

2.1.2 caller's emergency service identification (CESID): The number used to identify the calling terminal within the context of the emergency service system.

2.1.3 CESID outpulsing state: A call state in which the CI transmits the CESID.

2.1.4 call-processing state: A call state during which the Network establishes a communications path between the CI and the Public Safety Answering Point (PSAP).

2.1.5 carrier: An organization that provides telecommunications service to the public.

2.1.6 communications state: A call state in which two-way voice communication is possible between the CI and the PSAP.

2.1.7 customer installation (CI): All telecommunications equipment and wiring on the customer side of the network interface.

2.1.8 Enhanced 911 system: A system that establishes connections between CIs and constituent PSAPs, provides Automatic Location Information (ALI), and has provisions for selective routing.

2.1.9 fall time: An MF signal timing interval that begins when the MF signal duration ends and ends when both tones of the MF pair fall below –58 dBm at the NI.

2.1.10 idle state: A call state in which the Network is available for seizure by the CI.

2.1.11 information digit: One element of the calling terminal identification number outpulsing format that indicates if the CI has identified and can provide the calling number of the telephone initiating the call request.

2.1.12 interdigit interval: An MF signal timing interval equal to the sum of the fall time, signal-off time, and rise time. The interdigit interval starts when the MF signal duration ends.

2.1.13 KP (key pulse) signal: The first signal in an MF outpulsing format; it is used to prepare the distant equipment to receive digits.

2.1.14 multi-frequency (MF) signaling: An ac signaling method that uses the simultaneous transmission of two frequencies from a group of six frequencies to represent numerical values and control signals.

2.1.15 Multi-Line Telecommunications System (MLTS): For purposes of this standard, CI equipment and wiring that allows multiple terminals to share Enhanced 911 switched access. A Private Branch Exchange (PBX) or a Key Telephone System (KTS) are examples of an MLTS.

2.1.16 network: A combination of transmission and switching facilities used to establish communication paths.

2.1.17 network interface (NI) – demarcation point: The point of interconnection between a network provider and the CI.

2.1.18 off-hook signal: The CI off-hook signal at the NI is a low-resistance tip-to-ring path. The network off-hook signal at the NI is a ground on the ring conductor and a negative voltage on the tip conductor.

2.1.19 on-hook signal: The CI on-hook signal at the NI is a high-resistance tip-to-ring path. The network on-hook signal at the NI is a ground on the tip conductor and a negative voltage on the ring conductor.

2.1.20 Public Safety Answering Point (PSAP): An answering location for 911 calls originating in a given geographical area. A PSAP will dispatch the appropriate emergency service needed, such as police, fire, or medical.

2.1.21 rise time: An MF signal timing interval that begins when either tone of the MF tone pair exceeds –58 dBm and ends when both tones of the MF tone pair exceed 90 percent of their respective steady-state values at the NI.

2.1.22 seizure state: A call state initiated by the CI in which the network prepares to receive outpulsing.

2.1.23 signal duration: An MF signal timing interval that begins when the last tone of the MF tone pair exceeds 90 percent of its steady-state value and ends when either tone of the MF tone pair falls below 90 percent of its respective steady-state value.

2.1.24 signal-off time: An MF signal timing interval that starts when the fall time of one MF signal ends and ends when the rise time of the next MF signal starts.

2.1.25 ST (start) signal: The last signal in the MF outpulsing format; it is used to indicate the end of a field of information.

2.1.26 supervisory signaling: On-hook and off-hook signals that are specific electrical conditions at the NI that are used to control call states and processes.

2.1.27 voiceband: The frequency range commonly associated with the transmission of speech; generally considered to be a frequency range of 300 to 3000 Hz.

2.1.28 wink-start signal: An off-hook signal of a defined duration that indicates that the Network is ready to receive called number outpulsing.

2.2 Abbreviations, acronyms, and symbols

ac	alternating current
ALI	automatic location information
CESID	caller's emergency service identification
CI	customer installation
dB	decibels
dBm	decibels relative to 1 milliwatt
dc	direct current
Hz	hertz
KP	key pulse
MF	multifrequency
MLTS	Multi-Line Telecommunication System
mA	milliampere
ms	millisecond
NI	network interface
Ω	ohm
rms	root-mean-square
ST	start signal
V	volt

3 General information

3.1 911

The three-digit number 911 has been reserved for emergency calls to request police, fire, medical, or other assistance. The number is activated in communities that have established a 911 system for access to one or more PSAPs.

3.2 Enhanced 911

Some 911 systems have features such as selective routing and automatic location identification (ALI). Selective routing provides the automatic routing of 911 calls to the particular PSAP responsible for processing the request for emergency service. Automatic location identification provides the CESID, location, and other information to the PSAP. Systems that provide these features are called Enhanced 911 systems.

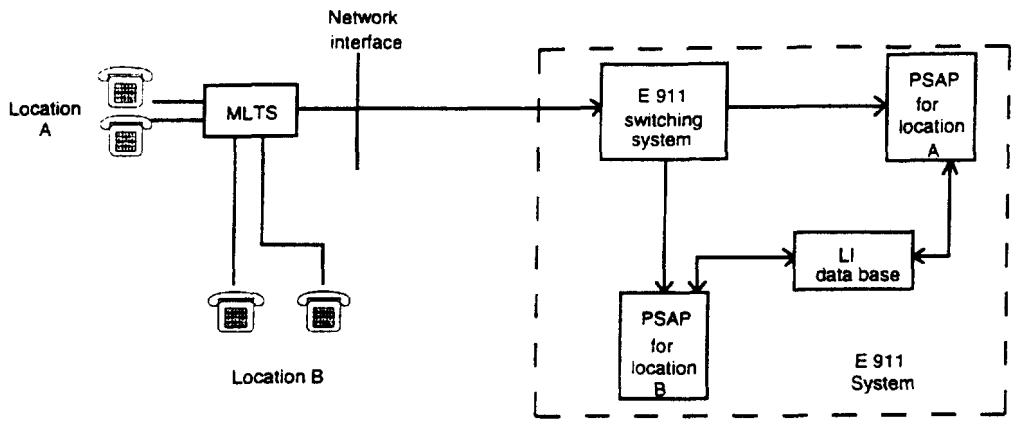

MLTS	=	Multi-Line Telecommunications System
PSAP	=	Public Safety Answering Point
LI	=	Location Identification
Location A	=	MLTS and terminal location
Location B	=	Off-premises terminal location

Figure 1 – Typical MLTS/Enhanced 911 system configuration

3.3 CESID information

The selective routing and automatic location identification features of Enhanced 911 systems require CESID information to be transmitted to the Enhanced 911 system.

3.4 Shared Enhanced 911 switched access

If the interface and signaling protocol described in this standard are not employed, i.e., when a 911 call from a Multi-Line Telecommunication System (MLTS) is using a loop-start or ground-start switched-access line, then the access line provider knows only the access line CESID, but not the CESID of the calling terminal. The Enhanced 911 system will consequently route the call to the PSAP that serves the MLTS location. The location information and CESID displayed at the PSAP are those associated with the MLTS. The CESID and the physical location of the calling terminal could be different.

The interface described in this standard provides a means for the CI to transmit the CESID of the calling terminal directly to the Enhanced 911 system when multiple terminals share Enhanced 911 switched access. The CESID information permits the Enhanced 911 system to route the call to the PSAP serving the calling terminal location and to provide the PSAP with CESID and location information.

Figure 1 illustrates a typical MLTS–Enhanced 911 system configuration using the analog voicegrade Enhanced 911 switched access interface described in this standard. When an emergency arises, a caller at the MLTS location or an off-premises terminal location may access the dedicated Enhanced 911 system interface by dialing the emergency number recognized by the MLTS (usually, but not always, 911). The MLTS then interacts with the Enhanced 911 switching system using the signaling described in this standard. The Enhanced 911 system then routes the call to the PSAP that serves the calling CI terminal location.

3.5 Physical interface

At the NI, this interface consists of two wires commonly called tip (T) and ring (R).

3.6 Operation of interface

Figure 2 illustrates the operation of the interface covered by this standard. It does not represent any actual implementation by either the network or the CI.

In the idle state, the CI applies an on-hook signal to the NI and monitors the condition of the network with its voltage polarity sensor. The network also applies an on-hook signal and monitors the condition of the CI

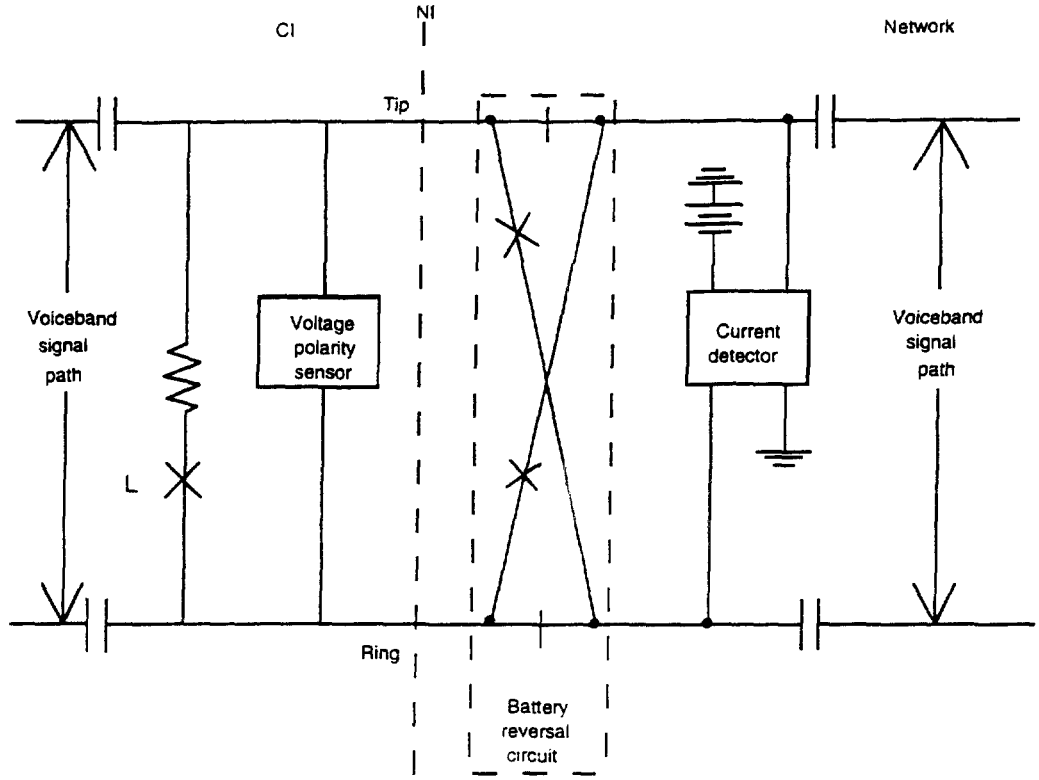

Figure 2 – Simplified schematic of Enhanced 911 switched-access interface

with its current detector. To initiate a call through an Enhanced 911 system, the CI sends an off-hook signal by closing a tip-to-ring dc path through contact L. The network detects the loop current caused by the CI off-hook signal. When the Enhanced 911 system is ready to receive the called-number information, the network sends an off-hook wink. It does this by momentarily reversing the polarity of the battery applied between the tip and ring conductors. After the Enhanced 911 system receives the called-number information from the CI, the network applies an off-hook signal (sustained reversal of battery between the tip and ring conductors) to indicate that the Enhanced 911 system is ready to receive the CESID from the CI. After receiving the CESID, the Enhanced 911 system establishes a communication path between the CI and the PSAP. At the completion of the call, the network indicates disconnect by applying an on-hook signal to the NI. The CI indicates disconnect by opening the tip-to-ring path with contact L.

4 Call states and processes

4.1 General

Requirements are specified for the following call states and processes at the NI:

- idle state;
- seizure state;
- called-number outpulsing state;
- CESID outpulsing state;
- call-processing state;
- communications state;
- disconnect process.

The network provides direct current (dc) power at the NI for supervisory signaling. The CI supervisory signals are on-hook (high-resistance, tip-to-ring path) and off-hook (low-resistance, tip-to-ring path). The network supervisory signals are on-hook (normal-battery polarity) and off-hook (reverse-battery polarity). dc signaling requirements are found in clause 5.

4.2 Idle state

In the idle state, the network is available for seizure by the CI to initiate a new call attempt. This state begins with the completion of the disconnect process and ends when the CI applies a seizure (off-hook) signal at the NI. In the idle state, both the network and the CI shall apply an on-hook signal at the NI.

If, during this state, the network applies an off-hook signal or removes battery between tip and ring at the NI, the network shall be considered "busy" and the CI shall not apply an off-hook at the NI.

4.3 Seizure state

In the seizure state, the network prepares to receive signals from the CI. It begins when the CI applies an off-hook signal, and ends at the conclusion of a short duration off-hook signal from the network. This short duration of off-hook is called a wink-start signal and indicates that the network is ready to receive called-number outpulsing. During this state, the CI shall apply an off-hook signal at the NI. The CI off-hook signal shall persist without interruption until disconnect is initiated.

During the seizure state, the network shall apply an on-hook signal, followed by the wink-start signal. The duration of the wink-start signal at the NI shall be between 100 and 350 ms. If the wink-start signal is not applied at the NI within 4 seconds, the CI shall initiate the disconnect process as described below.

4.4 Called-number outpulsing state

In this state, the CI transmits MF addressing signals that identify the called number. This state begins with the conclusion of the wink-start signal, and ends with the beginning of an off-hook signal from the network. The CI shall begin the transmission of MF addressing signals between 70 and 200 ms after the beginning of this state. The MF addressing signals shall meet all of the requirements of clause 6. During this state, the CI shall apply an off-hook signal at the NI and the network shall apply an on-hook signal at the NI.

4.5 CESID outpulsing state

In this state, the CI transmits MF signals that identify the CESID. This state follows the called-number outpulsing state and begins with an off-hook signal from the network. This network off-hook signal is called the CESID request signal and indicates that the network is ready to receive CESID outpulsing. The network off-hook signal shall persist until the disconnect process is initiated.

This state ends when the last MF signal (ST) has been transmitted by the CI. The CI shall begin the transmission of MF signals between 70 and 200 ms after the beginning of this state. The MF signals shall meet all of the requirements of clause 6. During this state, both the CI and the network shall apply an off-hook signal at the NI.

4.6 Call-processing state

This state begins when the CI has completed CESID outpulsing and ends when the call is answered at the PSAP, or when the CI abandons the call attempt. While in this state, both the CI and the network shall apply an off-hook signal at the NI.[2)]

4.7 Communications state

This state begins when a two-way communications path has been provided between the CI and the PSAP. In this state, both the CI and the network shall apply an off-hook signal at the NI.

4.8 Disconnect process

To indicate disconnect, the network shall apply an on-hook signal at the NI having a duration of 400 ms or greater. If the CI is sending an off-hook signal, it shall return to the idle state within 700 ms of the application of on-hook by the network.

To indicate disconnect, the CI shall apply an on-hook signal at the NI. If the network is sending an off-hook signal, the network shall return to the idle state by sending an on-hook signal. At no time is the Enhanced 911 system in control of maintaining the connection, once the CI signals an on-hook condition.

---

2) During the call-processing state, call progress signals may be returned to the CI. For example, audible ringing may be returned by the PSAP to indicate that the attendant is being alerted or reorder tone may be returned to the Enhanced 911 system as an indication that the call cannot be completed.

5 dc signaling

dc signaling is accomplished through the use of two electrical states called on-hook and off-hook.

5.1 CI requirements

5.1.1 Resistance to ground

At all times, the CI resistance to ground, from either tip or ring, shall exceed 100 kΩ.

5.1.2 On-hook signal

When the CI is sending an on-hook signal, the resistance from tip-to-ring at the NI shall exceed 100 kΩ.

5.1.3 Off-hook signal

When the CI is sending an off-hook signal, the resistance between the tip conductor and the ring conductor at the NI shall not exceed 670 Ω. This requirement shall be met when measured with a potential between the tip and ring conductors of 4.0 V dc to 52.0 V dc, applied in either polarity.

5.1.4 Recognition of network supervisory signals

The CI shall recognize the polarity of tip more positive than ring as a network on-hook signal, and tip more negative than ring as a network off-hook signal. This requirement shall be met both when the CI is sending an on-hook signal and when it is sending an off-hook signal.

For various reasons, there may be short changes in the network supervisory signal. Changes in the network supervisory state lasting less than 35 ms shall be ignored.

5.2 Network requirements

5.2.1 Voltage

At the NI, the network shall provide a voltage that is negative relative to ground on one conductor. The open circuit voltage on this conductor shall be between 40.0 V dc and 80.0 V dc. The open circuit voltage on the other conductor shall be between 0.0 V dc to −5.0 V dc relative to ground. When the CI is replaced with a 670-Ω resistance at the NI, the network shall provide at least 8.33 mA in both the tip and ring.

5.2.2 On-hook signal

When the network is sending an on-hook signal, the tip shall be positive with respect to the ring at the NI.

5.2.3 Off-hook signal

When the network is sending an off-hook signal, the tip shall be negative with respect to the ring at the NI.

5.2.4 Recognition of CI supervisory signals

The network shall recognize a resistance of 670 Ω or less across tip and ring at the NI as a CI off-hook signal.

6 ac (MF) signaling

6.1 Description of MF signaling

MF signaling uses combinations of two, and only two, of six voiceband frequencies to represent numerical information and control signals.

6.2 MF signaling requirements

MF signals transmitted by the CI shall conform with the following requirements when measured with a 600-ohm ac test termination across the tip and ring conductors at the NI.

6.2.1 MF frequencies

MF signals shall consist of two sinusoidal tones from a group of six frequencies and shall represent the characters shown in table 1. The frequencies of the tones shall be within 1.5% of the nominal values shown in table 1.

6.2.2 MF signal timing

The timing elements of the MF signals are rise time, signal duration, fall time, signal-off time, and interdigit interval. The two frequencies of an MF signal shall start and end within 1 ms of each other. MF signals shall have the timing characteristics shown in table 2.

6.2.3 MF signal power

The steady-state rms power of each MF frequency at the NI shall be −7 dBm ± 1 dBm. The difference in power between the two frequencies of an MF signal at the NI shall not exceed 1 dB. During signal-off intervals, the steady-state rms power of any MF frequency at the NI shall not exceed −58 dBm.

6.3 Extraneous signals

The total power of all extraneous signals between 300 and 3000 Hz at the NI during MF signal transmission shall be at least 30 dB below the power of either of the two transmitted frequencies.

6.4 Called-number outpulsing format

The called-number outpulsing format shall consist of a KP signal, the called number signals, and the ST signal, in that order. The CI shall transmit either "911", "11", or "1" as the called number. The particular called number to be transmitted by the CI shall be specified by the Enhanced 911 system provider. The CI shall transmit the same called number on every call attempt. The interface may only be used for placing calls to Enhanced 911 systems. The called number outpulsing format is summarized in table 3.

6.5 CESID outpulsing format

The CESID outpulsing format shall consist of a KP signal, an information digit signal, the CESID, and the ST signal, in that order. The CESID outpulsing format is shown in table 3.

6.5.1 Information digit requirements

The CESID outpulsing format contains an information digit. The information digit shall be an MF signal that represents the digit 0 or the digit 2. The CI shall transmit an information digit 0 when the CI knows and will transmit the CESID. The CI shall transmit an information digit 2 when it does not know or cannot transmit the CESID.

6.5.2 CESID requirements

The CI shall transmit the 7- or 10-digit CESID assigned to the calling telephone. The 7- or 10-digit format shall be specified by the Enhanced 911 system provider.

Table 1 – MF frequencies

MF characters	Nominal frequencies Hz
1	700 + 900
2	700 + 1100
3	900 + 1100
4	700 + 1300
5	900 + 1300
6	1100 + 1300
7	700 + 1500
8	900 + 1500
9	1100 + 1500
0	1300 + 1500
KP	1100 + 1700
ST	1500 + 1700

Table 2 – MF signal timing requirements

	Duration ms	
	minimum	maximum
KP signal	90	120
All other signals	58	75
Signal-Off	53	–
Interdigit Interval	58	75

Table 3 – Enhanced 911 CI outpulsing formats (see note 1)

Called number	CESID
KP-911-ST or KP-11-ST or KP-1-ST	KP-0-(7 digits)-ST or KP-0-(10 digits)-ST or KP-2-ST (see note 2)

NOTES

1 The called number outpulsing format and the calling number outpulsing format shall be specified by the Enhanced 911 system provider.

2 This outpulsing format is used when the CI does not know or cannot transmit the CESID.

Annex A
(informative)

Bibliography

ANSI T1.405-1989, *Telecommunications – Interface between carriers and customer installations – Analog voicegrade switched access using loop reverse-battery signaling*

ANSI/EIA/TIA 464-A-1989, *Private branch exchange (PBX) switching equipment for voiceband application*

FR-NWT-000064, *LATA switching systems generic requirements (LSSGR)*[3)]

Specific sections of the LSSGR:

- TR-TSY-000506, *Signaling, section 6*[3)]
- TR-TSY-000540, *Tandem supplement to the LSSGR*[3)]
- TR-NWT-000682, *Automatic number identification (ANI) and operator number identification (ONI), FSD 20-20-000*[3)]

TIA/EIA TSB103-1993, *PBX and KTS support of enhanced 911 calling service*[4)]

[3)] Available from Bellcore Customer Relations, 8 Corporate Place, Room 3A-184, Piscataway, NJ 08854-4156.

[4)] Available from TIA Standards and Technology Department, 2500 Wilson Blvd., Suite 300, Arlington, VA 22201.