ACOUSTIC MEASUREMENTS

Hearing Aid Acoustic Output

The hearing aid was connected to an acoustic 2 cc coupler (acoustic termination) and measuring microphone by a 2 mm internal diameter tube 500 mm long made of Tygon® tube broken by a short metallic hole in the manipulator mounting base. The acoustic response was attenuated by about 10 to 12 dB at 1000 Hz by this tubing. Third octave filtering was found to be sufficient for reducing the ambient noise levels in the laboratory to low enough levels to measure the hearing aid response without blocking the microphone port. The A-weighted ambient noise level in the laboratory when these measurements were made was about 40 dB SPL. Blocking the microphone port is not always possible, especially with high gain hearing aids that can become unstable when enclosed in the waveguide apparatus. It was necessary to reduce the gain with the volume control (sealed in place with modelling wax) for some hearing aids with very high gain.

The response of the hearing aid to the radio frequency field is converted to a sound pressure at the microphone input that would produce the same effect. This is the *equivalent input referred sound pressure*. This is a normalisation technique used for the specification of hearing aid noise levels, and enables simple comparison of hearing aids with widely differing gains and frequency responses. The acoustic gain of the hearing aid must be measured at 1000 Hz, and in practice it was convenient to measure the gain over the whole frequency range to make sure that the hearing aid was operating correctly.

Acoustic gain was measured with the system used at NAL and in AHS hearing centres for many years. It can be read to 0.5 dB and is normally calibrated using a B & K Calibrator at 1 kHz. Expected worst case accuracy is ±1.5 dB in gain.

Similarly, if the hearing aid is switched to the telecoil input, the *equivalent input referred magnetic field strength* is the appropriate measure of sensitivity of the hearing aid to interference. The output of the hearing aids were measured with 10 or 50 mA/m at 1 kHz to calculate the input referred magnetic field strength. In this report it is quoted in dB relative to 1 mA/m.

Apparatus

Acoustic Gain	-	National Acoustic Laboratories 8500 Portable Hearing Aid Test Facility,
Calibration	-	Brüel & Kjær Sound Level Calibrator Type 4230,
Measuring microphone	-	Brüel & Kjær 4155, with 1 in adaptor and 2 cc coupler,
Measuring Amplifier	-	Brüel & Kjær Type 2636,
Third Octave Filter	-	Brüel & Kjær Type 1617.

MEASUREMENT PROCEDURE

A computer was connected to the radio frequency generator and acoustic measuring equipment, so that the radio frequency field and all measurement parameters could be controlled on line, and the measured values calculated and recorded. Each set of measurements comprised a set of outputs at field strengths, usually with 10 steps per decade, spanning the field strengths to which the hearing aid responded with a square law. The detected rms output of the measuring amplifier was passed through a low pass fifth order Bessel filter with a bandwidth of 1% of the sampling rate. When all the readings in a block (usually 64) had settled to within ±0.1 dB of each other, the average of the block was recorded as the *response*. The *equivalent input referred sound pressure* was calculated and recorded for each *response*. This process provided steady values of the noise level below the range of response of the hearing aid, and provided a large measure of immunity from ambient impulse and other interfering sounds.

A large number of measurements could be made rapidly, and provide all output in computer files that were stored for analysis on a spreadsheet program. As discussed in Chapter 2, the intercept of the curve with 40 dB SPL was used as a *measure* of the *response*, since all responses exhibited a precise square law.

Apparatus

Computer - Compaq Deskpro© 486/66M fitted with a IEE488 digital interface card.

Software - National Instruments LabView©.

DIRECTIVITY

Some measurements were made to show what variations in response may be expected when the direction of the radio frequency field was varied. The orientation of the hearing aids was adjusted for a maximum response, and the response plotted as a function of rotation of the hearing aid in the plane of the *E* field. Three typical directivity patterns are shown in Figure 17. They vary considerably in detail. The hearing aid coated with silver paint has high immunity and little change in response over a wide angle.

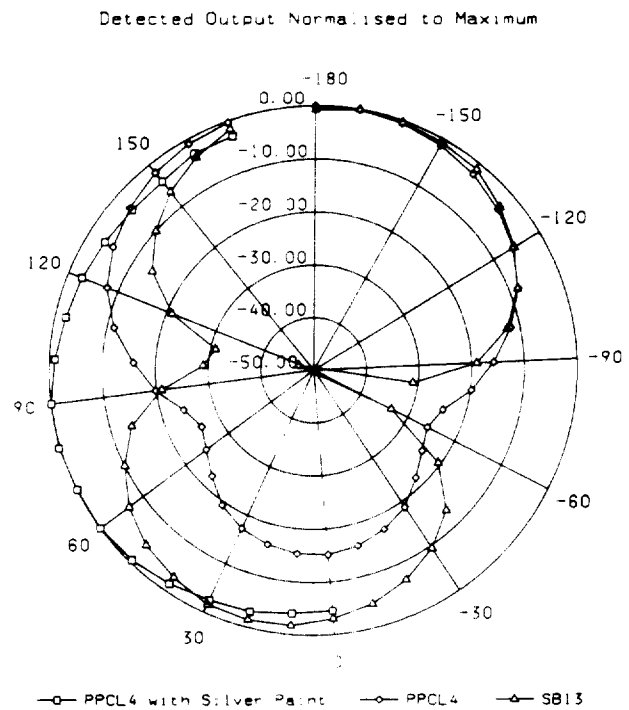

Figure 17 Typical Directivity Exhibited by Hearing Aids

FREQUENCY VARIATIONS

The responses of hearing aids to a constant radio frequency field for frequencies from 800 to 1000 MHz were measured. Figure 18 shows some typical responses. The variations observed indicate that accurate predictions are not possible.

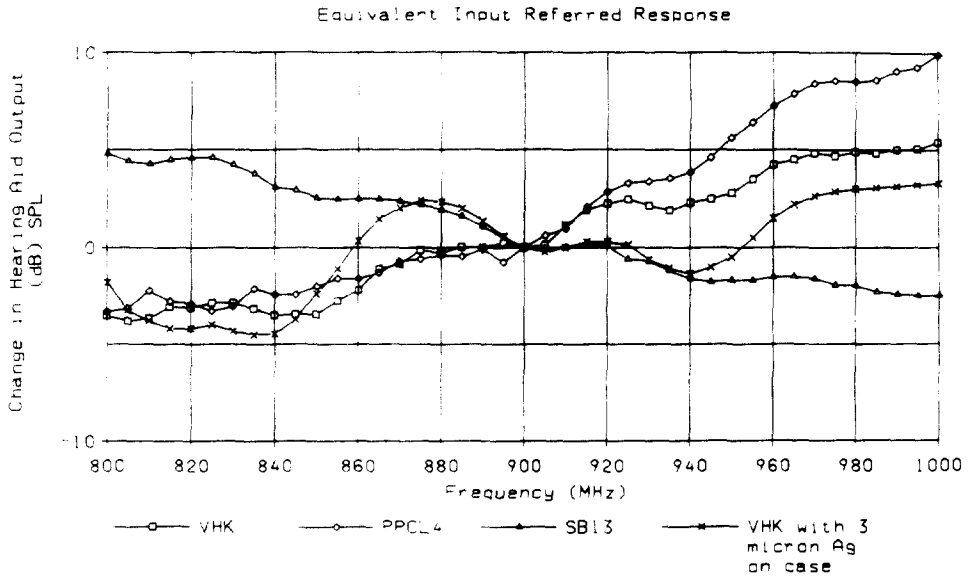

Figure 18 Typical Variation in Response with Frequency

Appendix 3. Comparison of Interference Measured in a Waveguide and a RF Anechoic Room

PURPOSE

It is more convenient, faster and cheaper to test a number of hearing aids inside a waveguide than in the free field situation, and it allows a wider range of comparative measurements to be made relatively easily. Conditions inside the waveguide are not the same as a plane wave in free space. The electric field is normal to the axis of propagation while the magnitude and direction of the magnetic field varies. Thus it is necessary to know if the interference detected by a hearing aid in the waveguide differs substantially from that in a RF anechoic room where a plane wave is assumed. Measurements using the waveguide test system set up at the National Acoustic Laboratories were compared with measurements in the RF anechoic room at the National Measurement Laboratories.

PROCEDURE

Hearing aids with both CMOS and bipolar[22] amplifiers were chosen which gave a valid acoustic response below saturation of the output and above the noise level when subject to a 10 V/m RF field.

A Yagi antenna was used to produce the RF field in the anechoic room. The test volume was placed approximately 1 metre from the nearest point of the antenna and the field strength of a 900 MHz continuous wave (CW) set to approximately 10 V/m. This level was chosen since it is a common standard field strength, it could be easily produced with the available apparatus and 10 V/m is proposed in the current Australian draft standard for interference to hearing aids by GSM telephones. The field strength was measured with a small RF probe in the test volume where the hearing aids were placed.

The carrier which was maintained at the same level as above and 80% amplitude modulated (AM) at 1000 Hz. The hearing aids were placed at the same position in the anechoic room and orientated for maximum detected 1000 Hz acoustic

[22] "CMOS" refers to complementary metal oxide silicon field effect transistors. "Bipolar" refers to silicon bipolar transistors.

output in the hearing aid. This output was recorded along with the acoustic gain of the hearing aid at 1000 Hz.

The hearing aids were then placed in the calibrated waveguide and the acoustic output was measured for RF field strengths above and below 10 V/m (spanning the CW level used in the anechoic room). Details of the waveguide and the RF field calibration are given in Appendix 1. The waveguide was calibrated with the same probe used for the field in the anechoic room. The hearing aid outputs were monotonically increasing with the RF field around 10 V/m.

The same acoustic apparatus was used for all measurements and are described in Appendix 2. Details of measurements in the anechoic room are given in the next two sections.

RADIO FREQUENCY MEASUREMENTS

The probe[23] was held on the top of the wooden dowel support with masking tape to place it in the same position as the centre of the hearing aids were to be placed. This was one metre above the RF absorbers on the floor. The dowel was rotated with a pointer clamped to the dowel at the base so that the angular position could be reasonably accurate and the output of the probe measured at the three angles.

A small error was caused by the mounting. The probe was taped to the side of the dowel and the dowel bent slightly under the weight. Thus the probe was not rotated exactly about its own axis. It was noticed during the acoustic tests, that by rocking the assembly after adjustment by a similar amount to the offset in the probe mounting, it could be verified that these errors were relatively small and were estimated to be less than ±0.5 dB in the hearing aid output or ±0.25 dB in the RF field strength since the hearing aid pickup exhibits a square law.

When the apparatus was first set up, excessive stray pick-up in the anechoic room made it necessary to remove the microphone and its cable and turn off the acoustic instruments to get a reasonably low zero reading of one or two microvolt on the digital voltmeter used to measure the probe voltage. After completing the acoustic measurements, the probe was replaced without moving the microphone, cable and instruments which were left turned on. The zero error was at that time low enough to obtain field measurements to verify that the microphone did not disturb the field appreciably. The reason for the change was not explained. One set of measurements were taken at angles 0, 120 & 240° and a second set at 60, 180 & 300° to check for inconsistencies. Measurements using 0, 120 and 240° gave slightly different values to that using 60, 180 and 300°. At 0 and 180° the probe

[23] The probe supplied by Telecom Research Laboratories is used to measure the magnitude of the electric field strength by summing the responses in three mutually perpendicular directions.

was approximately in the plane of the field. The average of all measurements was taken to be the field strength.

A photograph of the experimental arrangement of the mounting is shown in Figure 19.

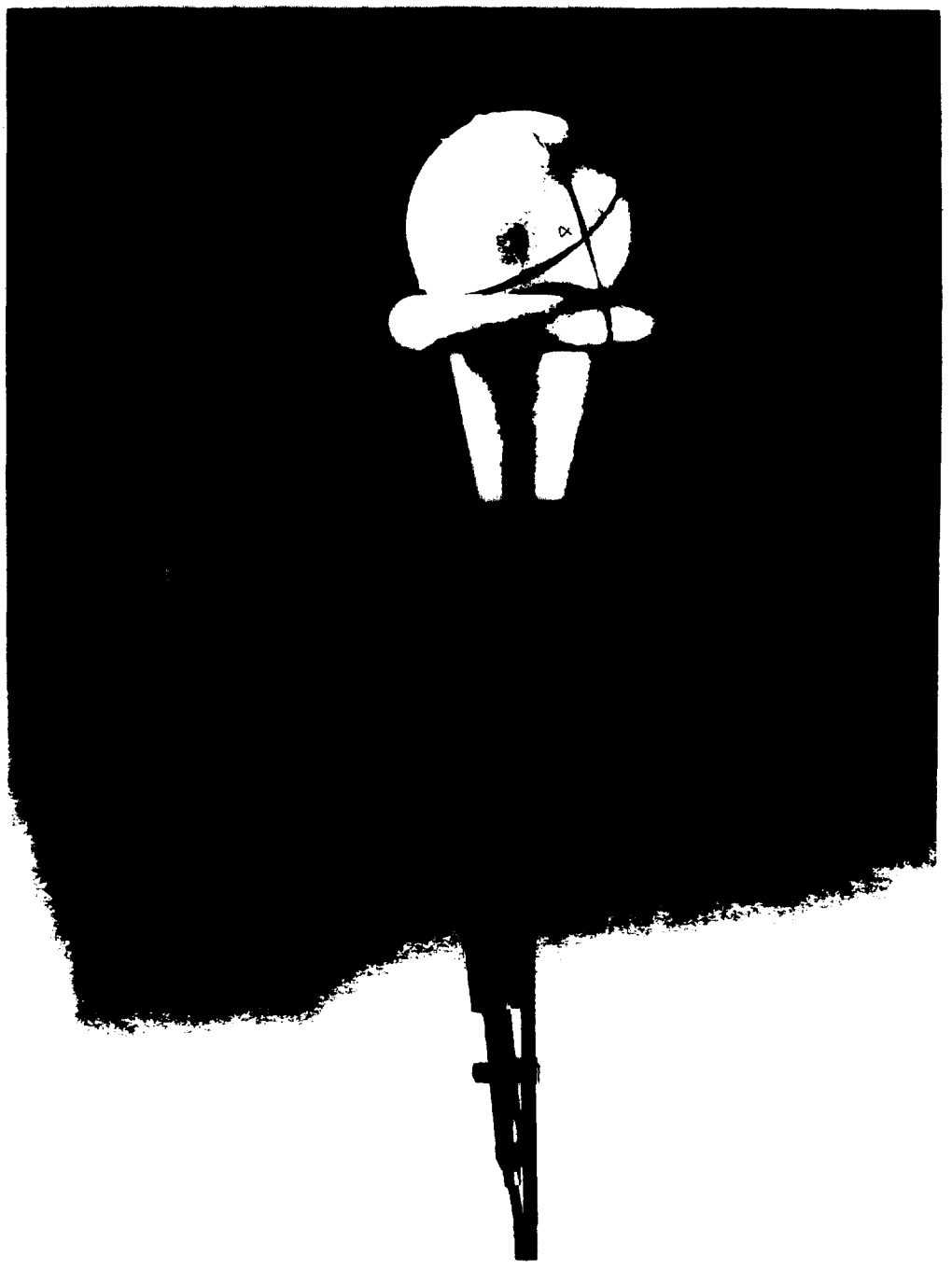

Figure 19 Mounting used in the Anechoic Room to Rotate the Hearing Aid

Apparatus

RF Generator	-	Rhode & Schwartz LN7186I SMG
RF Power Amplifier	-	RF Devices Pty Ltd, LA200-5, 5 watt
Diode Probe (RF Field)	-	Supplied by Telecom Research Laboratories
Digital Voltmeter	-	Hewlett Packard Type 3455A.

ACOUSTIC MEASUREMENTS

The hearing aids were terminated in a standard 2 cc coupler through a 2 mm inside diameter plastic "Tygon" tube 500 mm long in order to place the metal coupler and microphone far enough away from the hearing aid to prevent distortions of the RF field. The microphone cable was taped to the dowel support to minimise bending. The measuring amplifier and third octave filter were placed about three metres away.

The hearing aids were held in the centre of a 100 mm diameter sphere of polystyrene foam. A hot wire was used to slice the spheres in half and to hollow out a space to hold the hearing aids in place. The two halves were held together with a rubber band. The sphere was held with another rubber band on a toroid of polystyrene foam glued to a cone of polystyrene foam. A hole in the cone was used to hold it on the top of the wooden dowel. This arrangement enabled the aid to be rotated in any direction for maximum pick-up.

Mounting details are shown in the photograph in Figure 20.

The hearing aid acoustic output at 1000 Hz was measured with a third octave filter. The operator moved away from the aid near the instruments for all measurements. With about a dozen steps a maximum reading could be obtained to within 0.25 dB. The ambient sound level was sufficiently low for steady readings. The third octave filter was used to help the signal to noise ratio as well as to select only the 1 kHz component.

Apparatus

Measuring microphone	-	Brüel & Kjær Type 4155, with 1 in adaptor and 2 cc coupler.
Measuring Amplifier	-	Brüel & Kjær Type 2636,
Third Octave Filter	-	Brüel & Kjær Type 1617.

Figure 20 Hearing Aid Holder

RESULTS

Estimated Errors

For each of the following cases, the estimated worst case errors, in terms of the equivalent detected acoustic output of the hearing aid, are shown in bold type.

RF Field in Anechoic Room

When the measuring probe was rotated, it remained within 25 mm of its central position. The antenna was about 1 m or 3 wavelengths away, so that at worst case the variation in field strength could be +(1025/1000) to -(975/1000) or about ±0.2 dB. Variations caused by reading the probe and its angle with respect to the field were small and were repeatable to within 4% or ±0.35 dB. These errors are equivalent to **±1.1** dB worst case in the measured acoustic output of the hearing aid.

RF Field in the Waveguide

The same measuring probe was used to check the calibration. A Fluke Model 6060B RF Signal Generator was used to drive the RF power amplifier. This gave radio frequency fields within 0.1 dBm when previously compared with the Rhode & Schwartz generator used in the anechoic room. The estimated error is **±0.2** dB in acoustic output of the hearing aid.

Acoustic Output of the Hearing Aids

The main variability is in the calibration of the microphone. Total error in absolute level are considered to be better than **±0.5** dB under worst case conditions. Even though it was considered that the calibration did not vary for the duration of the measurements, it is included. Using the third octave filter kept the signal to noise high enough for stable readings to be taken.

Orientation of the Aids

The orientation in the waveguide could be adjusted for a maximum in acoustic output to better than 0.2 dB of the maximum, while measurements in the radio frequency anechoic room could be estimated to no better than 2 dB of the maximum, i.e. the expected error is **-2.2, +0.2** dB.

Hearing aid adjustments

The hearing aids were all left adjusted as at turn on and maximum or minimum volume controls according to the type. The main potential source of error was inadvertent movement of the controls when they were placed in the foam spheres for the measurements in the anechoic room. Reasonable care was taken, but the measurements were not repeated independently as a check.

Stability of Measurement

For the times between the measurements, it is unlikely that the responses of the aids drifted. Fresh batteries were used for taking the measurements. It is considered that the acoustic equipment is stable enough to not cause errors, and it is assumed that the RF generators used and the RF power generator did not drift during any series of measurements made after calibration with the RF probe.

Expected Error

Table 21 shows the sum of the expected errors discussed above. The worst case is assumed.

Table 21 Estimated Worst Case Errors

Source of Error	*Error (dB) in acoustic Output (in dB SPL)*	
	Negative	*Positive*
Field in Anechoic Room	1.1	1.1
Field in Waveguide	0.2	0.2
Acoustic Output of Hearing Aid	0.5	0.5
Orientation of Hearing Aids	2.2	0.2
Total	4.0	2.0

Thus the expected worst case error in acoustic output is **-4.0** to **+2.0** dB, which translates to **-2.0** to **+1.0** dB in electric field strength (in dB re 1 volt per metre).

Measurements

Field Strength in Anechoic Room

The measured values of the field strength in the anechoic room are shown in Table 22.

Table 22 Radio Frequency Electric Field in the RF Anechoic Room

Measured	*Field Strength* § *(0 120 & 240°) (V/m)*	*Field Strength* § *(60, 180 & 300°) (V/m)*	*Average Field Strength (V/m)*
Before Acoustic measurements	10.50	10.92	**10.57**
After acoustic measurements	10.45	10.41	

§ Field Strength E (V/m) = $C\sqrt{(e_1+e_2+e_3)}$, where the voltages are measured at the three angles and C = 9.54 is the calibration constant for the detector diode supplied by TRL.

The hearing aid acoustic outputs in the waveguide and in the anechoic room are shown in Table 23. The differences observed vary from **-2.3** to **+3.2** dB in SPL measured at the output of the hearing aids, which translates to **-1.15** to **+1.6** dB in electric field strength.

Table 23 Hearing Aid Outputs in RF Anechoic Room and Waveguide

Hearing Aid Type	*Serial Number*	*Acoustic Output (dB) SPL*		
		RF Anechoic Room at 10.57 V/m	*Waveguide at 10.57 V/m* †	*Difference between Waveguide & RF Anechoic Room*
SB13	C7063	91.5	92.2	0.7
SB13	C7069	84.9	83.5	-1.4
SB13	B8208	92.6	90.8	-1.8
SB13	B7041	58.0	58.6	0.6
PPCL4	D231102	92.2	89.9	-2.3
VLA §	305461	101.7	102.1	0.4
VLA §	318681	100.6	101.0	0.4
VLA §	291377	92.7	95.9	3.2

† Interpolated from measurements at 10.00 & 12.59 V/m.
§ These hearing aids were not used in the other experiments

DISCUSSION

It was thought that the dominant coupling between the radio wave and a hearing aid is the voltages induced on conductors connected to the input of the amplifier by the electric field ***E*** component of the radio wave. Any conducting loops are likely to have an effective inductive reactance at these frequencies large enough to prevent the magnetic field ***H*** component of the radio wave causing significant voltage across the amplifier input transistor. From the measurements in the radio frequency anechoic room and the waveguide, it is not certain that the ***H*** field is significant.

CONCLUSION

Within the accuracy of the measurements, the responses of the hearing aids measured in the waveguide and the radio frequency anechoic room were identical.

More repeatable and rapid measurements are easily obtained in the waveguide compared with that in the anechoic room.

Given these results it was not considered worthwhile to repeat the measurements to obtain higher accuracy.

Appendix 4. Square Law Detection of RF Signals

Response to RF signals appearing at the input of an amplifier is caused by rectification at the input transistor where amplitude variations are transformed into voltages that are amplified along with the desired signal. Formulae for the detected signals with sinusoidal and pulsed amplitude modulation are derived. It is shown that about one millivolt of RF voltage caused by a pulse modulated carrier, simulating a GSM transmission results in an equivalent input sound pressure of 30 dB SPL in a hearing aid.

TRANSISTOR CHARACTERISTICS

Transistor amplifiers designed for amplification of audio frequency signals respond to amplitude modulation of radio frequency signals applied to the input. The nonlinear characteristic of the input transistor causes square law detection of the amplitude modulation.

Bipolar Transistor [3]

In the normal active region at low currents, the instantaneous collector current I is, with sufficient accuracy[24]:

$$I(V) = I_o\, e^{\left(\frac{V}{v_T}\right)}, \qquad \textit{where} \quad v_T = \frac{k\,T}{q} \tag{1}$$

where v_T is approximately 26 mV, k is Boltzmann's Constant, T is absolute temperature, q is the charge on an electron and V is the voltage across the diode. The small signal gain is found by expanding $I(V)$ in Equation (1) as a Taylor series about the quiescent bias $(V_q\,,\, I_q)$.

The small signal collector current i_C as a function of small signal base voltage v_B is:

$$i_C = I(V_q - v_B) - I_q = I_q\left[\frac{v_B}{v_T} + \frac{1}{2}\left(\frac{v_B}{v_T}\right)^2 + \frac{1}{6}\left(\frac{v_B}{v_T}\right)^3 + \cdots\right], \tag{2}$$

$$\textit{where} \quad I_q = I(V_q)\,.$$

[24] It is assumed that this applies for modern transistors at 900 MHz.

i_C is the sum of the desired linear term *in* v_B , plus the quadratic term in v_B^2 which causes the "detection" of amplitude variations of RF signal voltages, plus third and higher order terms that are normally negligible, since $v_B/v_T << 1$. To allow direct comparison between the desired signal being amplified (i.e. microphone or telecoil signals) and the detected interference signal, Equation (2) may be written in the form, ignoring the third and higher order terms:

$$\frac{i_c}{g_m} = v_B + \Lambda v_B^2 ,$$

$$\textit{where} \quad g_m = \frac{I_q}{v_T} \tag{3}$$

$$\textit{and} \quad \Lambda = \frac{1}{2 v_T} .$$

g_m is the familiar small signal transconductance term (for linear amplification) and Λ is the small signal input referred square law coefficient used in the following section. The detected signals calculated in the next section using Λ are referred to the voltages across the input transistor

MOSFET Transistor [3] [4] [5]

The transistor may be designed to operate under conditions varying from weak to strong inversion. Low power, low voltage circuits (hearing aid amplifiers) require operation in weak inversion. In strong inversion, the transistor exhibits the familiar square law characteristic.

Weak Inversion: The current is mainly due to diffusion current between source and drain. The drain current may be expressed as:

$$I_D = I_{D0} \; e^{\frac{V_G}{n v_T}} \left[e^{\frac{V_S}{v_T}} - e^{\frac{V_D}{v_T}} \right] , \tag{4}$$

where V_G, V_S and V_D are the gate, source and drain voltages referred to the local substrate, and n is the slope factor usually between 1.2 and 1.3.

If the source and drain voltages are constant, the response is the same as for the bipolar transistor except that in Equation (3) we have:

$$g_m = \frac{I_{Dq}}{n v_T}$$

$$\textit{and} \quad \Lambda = \frac{1}{2 n v_T} , \tag{5}$$

where I_{Dq} is the quiescent drain current

Strong Inversion: The transistor operates in the saturation region. The drain current may be expressed as:

$$I_D = \frac{\beta}{2n}\left(V_G - V_T - nV_S\right)^2 , \qquad \textbf{(6)}$$

$$\textit{where} \qquad V_D \geq \frac{V_G - V_T}{n}$$

and β is the usual transfer parameter in strong inversion, and V_T is the threshold voltage. Writing the small signal gain in the same form as Equation (3), the small signal drain current i_D as a function of small signal gate voltage v_G, is:

$$\frac{i_D}{g_{mg}} = \left(v_G + \Lambda\, v_G^2\right) ,$$

$$\textit{where} \qquad g_{mg} = \sqrt{\frac{2\beta I_D}{n}} = \frac{\beta}{n}\left(V_G - V_T - n\,V_S\right) \qquad \textbf{(7)}$$

$$\textit{and} \qquad \Lambda = \sqrt{\left(\frac{\beta}{8 I_D n}\right)} = \frac{1}{\left(V_G - V_T - n\,V_S\right)} .$$

where and g_{mg} is the gate transfer conductance and Λ is the small signal square law coefficient, of the same order as before.

DETECTION OF AMPLITUDE MODULATION

Sinusoidal Amplitude Modulation

Let an amplitude modulated carrier voltage be applied to the base (or gate) of the input transistor of the amplifier. The input referred component of the input voltage causing the detection is:

$$\Lambda\left[\sqrt{2}\,V_c\,[1 + m\cos(\omega_m t)]\cos(\omega_c t)\right]^2 , \qquad \textbf{(8)}$$

where ω_m is the sinusoidal modulation frequency, ω_c is the carrier (radio) frequency, m is the modulation index (0.8), V_c is the RMS radio frequency carrier voltage and Λ is given by Equations (3), (5) or (7).

Expand Equation (8) by substituting for cosine squared terms and discard the DC and $\cos(2\omega_c t)$ terms that are filtered out and not amplified. This leaves first and second harmonic terms in ω_m:

$$2\ \Lambda\ V_c^2\ m\ [\ \cos(\omega_m t)\ +\ \frac{m}{4}\cos(2\omega_m t)\ ] \tag{9}$$

which appear in the output of the hearing aid. These terms are the input referred detected amplitude modulation. The magnitude of the detected signal is proportional to the square of the magnitude of the RF carrier signal. Of interest is the RMS value of the fundamental component, $\sqrt{2}\ \Lambda\ m\ V_c^2$ used in the measurements reported in Chapter (2). The RMS value of the second harmonic component is $(\sqrt{2}\ \Lambda\ m^2\ V_c^2)\ /\ 4$, giving 20% harmonic distortion of the detected signal.

Pulsed (Interrupted Carrier) Modulation

Let periodic pulses of RF signal voltage be applied to the input transistor. During each pulse the input referred component of the input voltage causing detection is:

$$\Lambda\left[\sqrt{2}\ V_c\ \ \cos(\omega_c t)\right]^2 . \tag{10}$$

Expand Equation (10) by substituting for the cosine squared term and discard the $\cos(2\omega_c t)$ term that is not amplified. This leaves the DC shift:

$$\Lambda\ V_c^{\ 2}\ , \tag{11}$$

which is the peak to peak amplitude of the input referred detected pulse-train. If the duty cycle of the pulse is d, the average of the pulse is d times its magnitude.

The RMS value of the pulse train obtained by evaluating the integrals:

$$\Lambda\ \frac{V_c^{\ 2}}{T}\sqrt{\left[\int_0^{Td}(1-d)^2\,dt\ +\ \int_{Td}^{T}(-d)^2\,dt\right]}\ =\ \Lambda\ V_c^{\ 2}\sqrt{d\ -\ d^2}\ . \tag{12}$$

Comparison of Response to Sinusoidal & Pulsed Modulations

From Equations (9) and (11) the ratio of the detected fundamental output with sinusoidal modulation to the detected pulse modulation is:

$$m\sqrt{\frac{2}{(d-d^2)}}\ =\ 3.421\ , \tag{13}$$

i.e. the detected sine wave is 10.68 dB greater than the detected pulse. If the second harmonic is included, the ratio is 12.27 dB.

If the pulsed carrier V_c is increased to have the same peak value as the sinusoidal modulated carrier, i.e. increased by:

$$20 \log (1 + m)^2 = 10.21 \text{ dB} , \tag{14}$$

then the difference in detected output is only 0.47 dB.

Discussion

When the detected voltage is referred to the input using Equation (3), (5) or (7) it can be compared with the microphone (or telecoil) voltage and thus with the sound pressure (or magnetic field strength) being amplified by the hearing aid.

The effect of any frequency shaping of the hearing aid circuitry is assumed to take place after detection, and is amplified and filtered identically to the microphone (or telecoil) signal.

Relation between the RF Amplitude to the Input Referred Sound Pressure

Consider Equation (3). The second term gives rise to a detected voltage given by Equations (9) and (11). The first term is proportional to the voltage (microphone or telecoil) being amplified. By equating the two terms, the carrier level V_c that produces the same output in the hearing aid as a signal voltage v_m (proportional to the microphone or telecoil voltage) is given by:

$$\begin{aligned} \textit{For sinusoidal AM (fundamental only)}, \quad v = v_m &= \sqrt{2}\ \Lambda\ m\ V_C^2 \\ \textit{and for Pulsed AM}, \quad v_m &= \Lambda \sqrt{d - d^2}\ V_c^2 . \end{aligned} \tag{15}$$

If there is no signal feedback, then v_m is equal to the microphone voltage. Given the microphone sensitivity, the carrier voltage may be expressed in terms of an *equivalent detected input sound pressure* using:

$$\begin{aligned} \textit{For Sinusoidal AM}, \quad V_c &= \sqrt{\frac{v_m}{\sqrt{2}\ \Lambda\ m}} \\ \textit{and for Pulsed AM}, \quad V_c &= \sqrt{\frac{v_m}{\Lambda \sqrt{d - d^2}}} . \end{aligned} \tag{16}$$

A typical microphone gives 1 mV when exposed to a sound pressure of 74 dB SPL, (or 20 μV for 40 dB SPL). The relationship between the radio frequency voltage V_c and the *equivalent detected input sound pressure* is illustrated in Table 24 under the assumed conditions that the microphone and RF voltages appear on the same transistor input.

Table 24 Interfering Carrier - Equivalent Detected Input Referred Sound Pressure

Interfering Carrier Voltage mV RMS		*Equivalent Detected Input Referred Sound Pressure (dB SPL)* §
Sinusoidal Modulation (m = 0.8)	Pulse Modulation (d = 1/8)	
0.54	1.00	30
0.96	1.77	40
1.70	3.15	50
3.03	5.61	60
5.39	9.97	70

§ Calculations are for a bipolar transistor amplifier.

Reducing Interference

For bipolar and MOSFET transistors in weak inversion, the coefficient Λ is fixed. Reduction of interference must be obtained by reducing the RF voltage appearing on the base or gate relative to the desired signal voltage from the microphone. The obvious choices include:

- Reduce the RF voltages by reducing the size of the wire elements on which the voltages are induced by the *E* component of the incident radiation,
- Electrostatically shield the amplifier to reduce the field strength,
- Shunt with capacitors or otherwise filter the RF voltages and
- Use circuit techniques to reduce the detected signals relative to the microphone (telecoil) signals.

Appendix 5. Draft Standards

IEC DRAFT STANDARD

IEC 118-XX

May 1994

Reference number 29/77B (Secretariat) 281/138

First IEC/CD 118-XX - Hearing aids. Part xx: Electromagnetic compatibility for hearing aids - Immunity to radio frequency fields.

Arising from a New Work Item Proposal put forward by the UK National Committee, the draft *immunity* standard is being developed by IEC/TC 29/WG 13 in cooperation with IEC/SC 77B/WG 7 as an addition to the IEC 118 series of standards which describe methods of measuring the electro-acoustic performance of hearing aids. The draft standard is predicated on two basic EMC standards of IEC/TC 77 which, at the time of the first Committee Draft, were also of Committee Draft status:

> ELECTROMAGNETIC COMPATIBILITY FOR ELECTRICAL AND ELECTRONIC EQUIPMENT
>
> Part 3: Immunity to radiated, radio frequency, electromagnetic fields and
>
> Part 4: Testing and measurement techniques Section y: Immunity to RF emissions from digital radio telephones.

The first Committee Draft prescribes a 3 V/m (before modulation) test field sinusoidally modulated with 1 kHz to 80% AM. Levels are specified, in the draft, up to 960 MHz with provision for extension to include the region from 1.7 to 2.0 GHz. The hearing aid under test is rotated in the horizontal plane in steps of 90° and measurements are performed at the orientation that produces the highest response. The specified performance requirement is for a maximum input related interference level of 45 dB SPL.

While the draft does not cover the usage of a digital mobile telephone on the same ear as the hearing aid, the inclusion of a note regarding the value of testing at field strengths of 50 V/m implies that much higher field strengths are expected in this scenario than are likely to be encountered in casual interference situations.

DRAFT AUSTRALIAN STANDARD

DR 94348 (March 1995)

Immunity requirements and methods of measurement for hearing aids exposed to radio-frequency fields in the frequency range 300 MHz to 3 GHz.

Overview

The draft standard applies to acoustic output hearing aids and is the result of work performed by sub-committees of Standards Australia / Standards New Zealand Committees TE/3 Electromagnetic Interference, and AV/3 Acoustics Human Effects. It is intended that it will be published as Part 9 of Australian Standard AS 1088 *Hearing Aids*.

The draft presented for public exposure in the September-November 1994 time frame specifically addresses *immunity* from disturbances in the range 800 to 1000 MHz but there is an intention, as evidenced by the title, to extend the coverage through future work.

The prescribed test field is sinusoidally modulated with 1 kHz to 80% AM. While recommending an electromagnetic anechoic chamber capable of establishing an adequately large uniform field, the draft recognises the convenience and applicability of alternative equipment.

The draft requires that the hearing aid under test be exposed to two mutually orthogonal polarisations of the test field on each of six aspects corresponding to three axes. Only the combination yielding the highest response, however, is required to be formally tested.

The issue of GSM system *access*, by hearing aid users, is considered an important one and effort has been directed towards quantifying the level of electromagnetic *immunity* necessary to permit such usage under various scenarios. It is noted, in the draft, that test field strengths of the order of 100 V/m (before amplitude modulation) are expected to be necessary for evaluating the efficacy of hearing aids for this application. It is the intention to proceed with the incorporation of such *immunity* requirements as are necessary to facilitate *access* as soon as practicable.

Immunity Performance Requirement

The primary basis of the *immunity* performance requirement chosen for hearing aids intended for use in a general environment, is the results of work performed in Denmark for EHIMA [1]. In particular the results of listening tests as expressed in Fig. 4.3.1 *Cumulative distribution of responses in "quiet" environment (pink noise, 35 dB SPL)*, which quantify annoyance, in conjunction with consideration of the severity of the chosen interferer relative to a real GSM source, have been used to find an appropriate numeric acceptance level.

Standards Australia subcommittee TE/3/4 determined that the standard should ensure that not more than 10% of hearing aid users will be annoyed by interference from 2 W digital cellular telephones operating at a distance of 1 metre. These criteria led to an input referred interference level, using Fig. 4.3.1 of 45 dB SPL and an interrupted 10 V/m RMS carrier field strength which would exceed the field strength normally expected from such telephones at that distance (or that due to an 8 W mobile telephone at 2 metres)[25]. The chosen 80% amplitude modulated radio frequency test field having 10 V/m RMS carrier field strength applies a peak RMS field strength 1.8 times that of an interrupted 10 V/m RMS carrier field strength. This difference is approximately 5 dB in field strength or 10 dB after square law demodulation. Thus, taking into account the greater severity of the chosen RF test field, the 45 dB SPL input referred interference level is raised to 55 dB SPL.

[25] Appendix 6 indicates that for 8 watt and 2 watt telephones, the maximum field strengths measured were 6.2 V/m and 7.1 V/m respectively at 2 m and 1 m, (Tables 3 and 4).