Although our LNP solution satisfies the RFP requirements, we do not represent it as the only possible solution. Our truly open approach to LNP enables us to continue to subject our model to scrutiny and testing, and to explore alternatives; e.g., alternate AIN triggers. Upon award, we intend to involve additional carriers and vendors in this process.

As with any project of this magnitude, several important steps in the very early stages of the project will define success or failure. Our technical model is an important first step, but only if we use it as a foundation for a well planned and managed effort involving thorough planning and coordination with the participating Companies.

We envision the trial as having three distinct stages (beyond the three internal trial phases): pre-trial, trial, and post-trial. Although important activities will occur in all three of the stages, the pre-trial stage is clearly the stage that will ensure a successful demonstration.

Project Manager Richard Dowd, who will spearhead this project, has been allocated the resources necessary for the trial. Figure 3.7-1 is our LNP trial organization chart, and identifies the project's key individuals and organizational elements. APPENDIX D contains our detailed Milestone chart for the project.

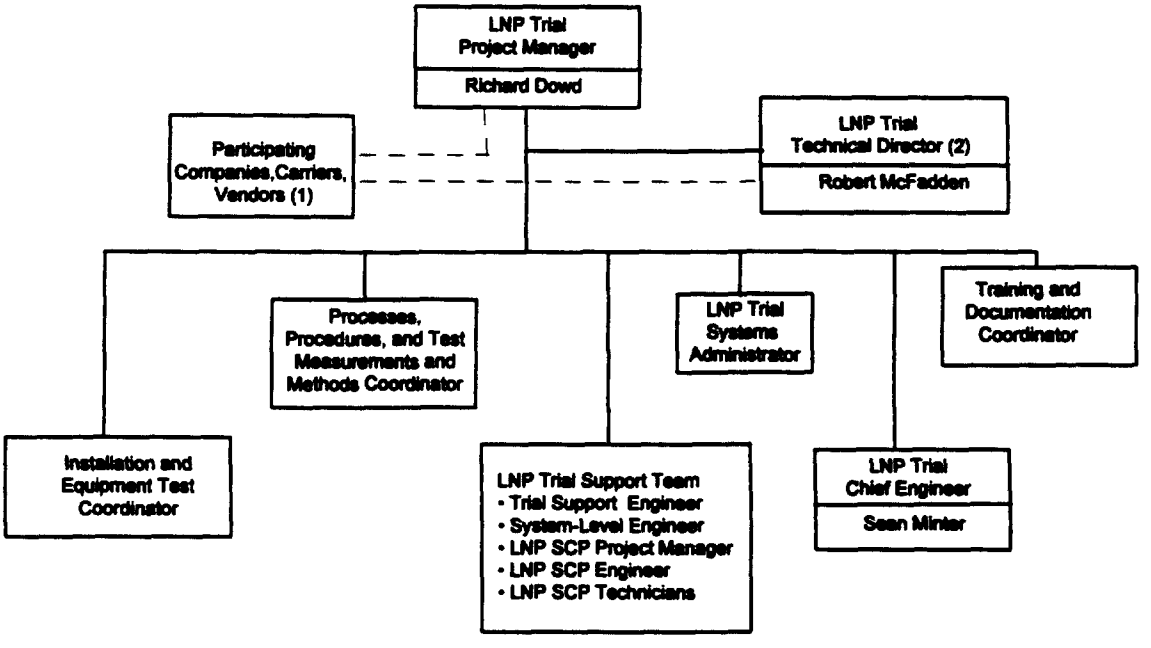

Notes: 1. Participating Companies interact directly at all organizational levels as appropriate
2. Technical director directs all technical activities

Figure 3.7-1. MCI LNP Trial Organization

After award, we will immediately focus on the pre-trial phase by conducting a project inaugural meeting for all interested and participating Companies. We envision the agenda for this meeting will include such topics as:

- Formal presentation/discussion of the Carrier Portability Code model, followed by an open question and answer session.
- Review of our LNP prototype development activities, including:
  - laboratory network topology
  - test results from all executed laboratory test plans
  - capacity/load-testing results
  - all processes, procedures, and test plans developed to support laboratory activities.
- A review and discussion of switch implementation requirements.
- Detailed review of our proposed milestones for the entire LNP trial.
- A live demonstration of the Carrier Portability Code model, to include:
  - porting a subscriber from one Local Service Provider to another and back again using a laboratory service-management tool
  - demonstrating feature functionality for Calling Number/Delivery, CLASS Screening List Editing, 800 Services, etc.

Associated with the inaugural meeting, we plan to host several technical forums to openly discuss implementation processes required for the trial. Topics will include, but will not limited to, the following:

- Marking an NPA-NXX as portable and identifying the process needed to notify all trial participants of each change and its effective time
- Notifying participants that a customer is to move from one switch to another at a specific time
- Executing the time-critical elements of the subscriber move
- Measuring the impact of the LNP trial on ported and non-ported users, as well as on critical network elements

Our inaugural meeting and associated technical forums will reflect our early planning and our big-picture, long-term approach, and will include draft documents intended to facilitate meetings and coordination. Further details are in APPENDIX D, items 8 through 9.3.

Consistent with our goal of an open solution, and realizing the challenges that go with managing any project of this magnitude, we will encourage the participating Companies to be constantly involved during all stages of the pre-trial, trial, and post-trial periods. We will publicize our own internal project meetings, and will encourage attendance by participating Companies. We will publish all interim results and distribute all associated reports via the Internet. We view the active solicitation of multiple viewpoints as very important, especially during the pre-trial and trial phases of the project.

During the implementation phase of the trial, we will provide all support and assistance needed to install and test all components of our solution. The experience gained during the development and testing of our own LNP prototype gives us, as well as the participating Companies, advantages in both approach and execution of all phases of the LNP trial. We look forward to sharing the experience and information gained during these activities.

The Carrier Portability Code (CPC) model was designed for full-scale implementation. We have attempted at every stage to evaluate not only the impact of the model's design on existing networks, but also its ease of upgrade towards other types of portability. We are confident that the forthcoming trial will produce valuable information, and we look forward to openly sharing all test/performance metrics collected during the trial with all of the participating Companies.

3.7.1. Networks

The Provider shall integrate the trial systems (e.g., an LNP database) within the existing trial participating networks. The Provider will provide a total (turnkey) solution for the implementation of this trial. It is expected that the Provider will work closely with the trial participants to ease the trial transition and implementation. The turnkey solution will include the network arrangements, trial systems activation, operational processes and procedures execution, administration of the platform, and continuous trial monitoring and measurements collection. The Provider's proposed solution should be compatible with the networks of the trial participating carriers and allow proper Handling of traffic from/to non-participating carriers.

MCImetro and its partners will provide a total turnkey solution in the form of a Tandem SCP and full integration of this SCP into the existing networks of participating carriers. We will also provide the specification requirements for software modifications required to implement the IN solution on any other switch type used in the trial. Beyond these small software changes, our LNP architecture can be implemented using existing

software loads that are compliant with IN / AIN 0.1 standards documented in TR-TSY-00533, TR-TSY-001284 and TR-TSY-001285 (See Paragraphs 3.12 and 3.12.1 for known feature-interaction limitations). Our team will provide the necessary architectural information and assistance prior to the start of the trial to enable implementation of switch software changes and translations by each participating Company. We will also work with each participating Company to develop and implement the required network arrangements, trial systems, activation processes, platform administration, and monitoring and measurement processes.

Our solution is designed to be compatible with existing participating carrier networks, as well as with the networks of non-participating carriers. Although we do not foresee the need to modify the existing network topology for the trial, provided that calls from one participating service provider can be delivered to any other participating service provider today, we cannot guarantee that no changes will be needed until we have examined the existing topology. We will identify required changes very early in the pre-trial period to minimize the impacts of these changes.

Experience gained during our current LNP laboratory activities indicates that implementing this model requires minimal datafill for each new Carrier Portability Code, ported NPA-NXX, and ported subscriber. This demonstrates the simplicity of our solution, and indicates that we can expect minimal impacts on the trial network. Furthermore, our experience shows that we should anticipate no impact on non-participating carriers.

Paragraph 3.5.3 includes additional information related to network topology.

To prevent any negative impacts to existing networks and subscriber services, the trial manager will provide detailed plans to the participating service providers at the times indicated in APPENDIX D. These documents will include:

- A draft plan of the network topologies, including specific location information on the LNP SCP, its logical and physical connections into the trial network, and other information that may be identified at the trial inaugural workshop. The final version of this plan will be ready well before the beginning of the trial (APPENDIX D, item 20).

- A draft of the trial systems activation plan, which will be provided at the inaugural meeting working session workshop. The comments and concerns of all participating Companies will be used to produce the final version of the plan, which will be distributed well before the beginning of the trial (APPENDIX D, item 16).

- Details of operational processes affected by the trial, along with proposed solutions or programs to minimize impacts during the trial. These activities will begin at the inaugural meeting working session, with the trial manager

providing initial drafts for discussion and improvement (APPENDIX D, item 21.5).

- A plan to coordinate number-administration processes with New York Telephone and Rochester Telephone (in conjunction with APPENDIX D, item 16).

Number (and Subscriber move) administration will include, but will not be limited to, the detailed procedures to implement the following:

- Changes in portability status of an NPA-NXX office code and the required notifications to all participating service providers (APPENDIX D, item 16.1).

- Processes to notify participating service providers that a customer is to move to a new switch at a specific time (APPENDIX D, item 16.2).

- Processes to execute the change order at the indicated time with minimal interruptions to the subscriber's service. This process has already been drafted and was used to create a prototype service-management procedure that was used during our laboratory and demonstration activities (APPENDIX D, item 16.3).

- Processes to measure the impacts of the LNP trial on ported subscribers, non-ported subscribers, and all critical network elements (APPENDIX D, item 16.4).

3.7.2. Switching

[No RFP Paragraph provided]

If any Local Number Portability solution is to be successfully deployed, its design must be flexible enough to work with the diverse network elements involved in the trial. The following paragraphs provide details regarding the switching aspects of our solution.

3.7.2.1 The trial switching offices shall be equipped with SS7, capable of interfacing with the LNP database using the TCAP protocol. The Provider's proposed solution must be able to interface with the diverse systems of the participants. For this trial, the interface between the local switching systems and the LNP trial database could be one, or a blended combination of, the following:

Our LNP model is based on current standards, requires little or no development, and supports the many different network implementations currently deployed. It offers the participating Companies the choice of implementation via either an IN or AIN 0.1 protocol.

The IN interface was developed as another application of the TCAP 800 protocol and requires minimal changes to switch software. Paragraph 3.7.2.1.2 details the changes made for this IN solution.

Our AIN 0.1 approach utilizes the Public Office Dialing Plan (PODP), or 3/6/10, trigger. We are also actively exploring other possible AIN 0.1 implementations, and are prepared to work with any participant wishing to implement an alternative AIN 0.1 trigger.

We will work closely with the trial participants in the pre-trial stage to assist them in selecting the most appropriate interface for their individual network configurations, and also will assist with the implementation planning/provisioning of the selected interface. Our solution does not preclude the continuing use of MF trunk groups for any call to ported or non-ported numbers, before or after the query.

3.7.2.1.1. LEC Advanced Intelligent Network (AIN) Release 0.1 as described in Bellcore TR-NWT-001285 and TR-NWT-001284. It is assumed that no development is required in the AIN 0.1 Service Switching Point (SSP) equipped office for this trial.

Our solution complies with the AIN 0.1 architecture described in Bellcore's TR-NWT-001285 by using the AIN 0.1 Public Office Dial Plan (PODP) originating trigger. Assuming that the various switch vendors developed this trigger according to the AIN Release 0.1 standards, then no AIN SSP software development will be required to implement our solution, other than the effort that will be required of all LNP participants to address the interworking limitation of Automatic Recall and Automatic Callback as described in Paragraph 3.12.1. We will provide details of our implementation to trial participants as soon as they are identified.

3.7.2.1.2. Incremental development to early releases of LEC intelligent network, such as SSP 800 (TR-24) and AIN Release 0 (TR-402), if necessary.

The LNP model currently operating in our laboratory performs LNP queries using a TCAP 800 IN protocol that complies with the requirements documented in Bellcore's TR-TSY-000533 specification. The changes required to implement LNP were small incremental changes to switch software; much of the required functionality was met with the inherent translation/routing capabilities of the switch. We believe that other switching vendors' products provide similar flexibility and will require correspondingly small changes to existing software. The following lists itemize the modifications made in functional software areas of one of our vendor's switches to demonstrate LNP utilizing TCAP 800 IN protocol. These enhancements were made without major source-code changes and did not require either a new switch platform or generic software update/retrofit of the existing platform.

For TCAP 800 IN processing:

- Software was modified to prefix the NPA to the 7-digit Called Party Number prior to inserting it into the Called Party Number field in the TCAP 800 IN message.

- A translator modification was developed to allow calls to ported numbers preceded by 10XXX to be routed to a carrier. (Normally, 10XXX and 800 calls are blocked.)

- An Automatic Message Accounting (AMA) software billing enhancement was required to generate proper AMA records, rather than the INWATS AMA record normally produced for 800 calls.

For CLASS Features - Automatic Callback, Auto Recall, Screen List Editing:

- Terminating calls required a software modification to re-translate the CPC back to the NPA. This change ensures that the NPA-NXX-XXXX is used for such operations as Global Title Translation (GTT) and TCAP queries, which are required for CLASS features.

- A modification in the originating office ensures that the NPA (not the CPC) is placed in the Called Party Number field for such CLASS features as Automatic Callback.

- The IN method was implemented by modifying vacant-number-treatment software, thereby requiring the following change for CLASS feature activations to ported numbers: To avoid denial of CLASS feature activations, the originating end office, which shows ported numbers as vacant, must recognize that the Directory Number has been ported, and must launch an LNP database query. (Otherwise, all CLASS activations to ported numbers will be routed to Vacant Number Announcement.) Once the CPC has been returned by the LNP SCP, normal Global Title Translation of the CLASS TCAP query enables the activation to complete. This change will also be required by any participating Class 5 office that has subscribers being ported from their switch to another participating switch.

3.7.2.1.3 Providers proposed solution and interfaces using TCAP for this trial.

Both the AIN Release 0.1 and IN (TR-TSY-000533) interfaces utilize TCAP messaging. Our solution makes no changes to the underlying TCAP Protocol Standards as discussed in preceding Paragraphs 3.7.2.1.1 and 3.7.2.1.2.

3.7.2.2 It is expected that other (e.g., IXC, cellular) switching systems interfaces may need to be supported in the trial.

We are committed to working with the trial participants in the pre-trial stage to identify any other switching system interfaces that may be required, and to immediately addressing those interface needs. For example, we plan to use our current proprietary X.25-based switching system interface between the MCI Class 3 switches and our SCPs, which will query the LNP SCP via the same TCAP interface used by the LSPs. We expect many of the IXCs also will prefer to use their proprietary interfaces to access the LNP SCP.

3.7.2.3. Solutions which minimize development by all participating carriers are preferred. Providers should indicate their long-term view of what the architecture should evolve to and the development that will be required.

Our solution requires no development for an AIN 0.1 implementation other than the effort required of all industry participants to address the interworking limitation of Automatic Recall and Automatic Callback. Paragraph 3.12.1 discusses this limitation in greater detail. Only minor changes are required for the IN implementation to provide full feature interworking. Realistically, starting an LNP trial in February 1996, requires a solution that is based upon technology deployed today. Our solution makes excellent use of the currently available IN and AIN 0.1 technology, making it the low-risk choice.

As the penetration of ported subscribers increases, the resource requirements (i.e. SCPs, SS7 connections, etc.) necessary to support these subscribers will also increase. We anticipate that it will become more efficient to deploy a switching system interface that is dedicated to, and designed for, local number portability. Our LNP task force has been studying long-term solutions and will continue this work.

We believe a long-term model must be characterized by efficiency, reliability and flexibility. Potential solutions may include enhancing the AIN 0.1 call model to provide a LNP specific trigger with resultant query and response messages with the SCP, or developing a new IN application designed specifically for local number portability. We will present our recommendations to various industry groups (e.g., Industry Numbering Committee, T1S1) to spur discussion and initiate the standards-setting process that likely will be required. We currently anticipate that a long-term LNP solution will require standards changes in the following areas: enhancements to the AIN call model; ISUP modifications; operator services platform enhancements; AMA recording expansions; and billing-systems modifications.

3.7.2.4 The switching requirements herein are for the trial only. It is reasonable to envision that the long-term LNP solution will necessitate the deployment of multiple carrier switching platforms and databases which may vary in implementation from carrier to carrier.

Long-term development of LNP may consist of a multitude of solutions, that could vary by LSP and portability area. Our task force has concluded that an open, flexible solution

is a must, given the variety of network elements and architectures deployed today. We intend to pursue a solution that will allow each carrier to choose the type of switch interface deployed, whether AIN 0.1 based, IN based, proprietary IN based, or based on a new interface. In addition, our solution provides a LNP SCP that has the capability to receive multiple interfaces on the same application. The LNP SCP for any local portability area may be shared by some or all participating LSPs or duplicated by a carrier. Allowing these choices provides flexibility and facilitates the speedy implementation of LNP in an area. We hope to work with other trial participants to explore this subject and to agree on elements that are carrier determined, elements that must be coordinated among carriers in a portability area, and elements that must be agreed upon by the industry.

3.7.3. Signaling

[No RFP Paragraph provided]

Our proposed solution does not require any changes to the existing network beyond the addition of the LNP SCP and its connecting SS7 links. We are prepared to connect the LNP SCP pair to a pair of MCI gateway STPs that have existing connections to the New York Telephone and Rochester Telephone networks; however, we propose an alternative topology for consideration: connecting the LNP SCPs to a pair of New York Telephone and/or Rochester Telephone STPs in addition to the MCI pair. Succeeding paragraphs discuss both of these alternatives.

The signaling between the end offices and the SCP will be via SS7 links using messages defined by either AIN 0.1 as described in Bellcore TR-NWT-001285 or by IN SSP 800 as described in TR-TSY-000533.

3.7.3.1. The successful Provider must arrange signaling network access to the LNP trial database from participating carriers. Given the limited scope of the trial, use of existing signaling infrastructure is encouraged, minimizing the need for installation of new/dedicated signaling links to participating carriers. LNP database access provided through public hubbing networks (e.g., ITN, GTE Intelligent Network Server, MCI) is encouraged where they provide direct access to a participating carrier. Indirect access through multiple hubbing networks is discouraged due to the added transmission latencies adversely affecting call setup times. Participants will provide SS7 interconnect information to enable Providers to determine appropriate interconnect methodology for each participant.

Signaling network access to the LNP trial database from participating carriers can be provided in a number of ways. Based on our limited knowledge of the existing network topology, the two alternatives mentioned in Paragraph 3.7.3 (i.e., SCPs connected to an MCI STP pair or to an MCI STP pair and a New York Telephone and/or Rochester Telephone STP pair) would appear to be the most appropriate. We are open to other options that may provide better service to participating carriers.

Having the LNP SCP pair solely connected to an MCI STP pair, as depicted in Figure 3.7.3.1-1, could provide signaling to the LNP database for participating carriers other than New York Telephone and Rochester Telephone, independently of the New York Telephone and Rochester Telephone signaling networks. Participating carriers currently having signaling paths to the New York Telephone and/or Rochester Telephone networks could, if agreeable to those two companies, signal to the LNP SCPs through those existing signaling paths. Figure 3.7.3.1-1 shows some participating carriers (Network C) signaling via the New York Telephone and Rochester Telephone networks, and others (Networks A and B) directly connected to MCI STPs. This alternative requires two STP hops for New York Telephone and Rochester Telephone and any other carriers directly connected to the MCI STPs via their own STPs. Three STP hops are required for those participating carriers connected to the New York Telephone or Rochester networks via their own STPs and using those networks to relay signaling to the LNP database.

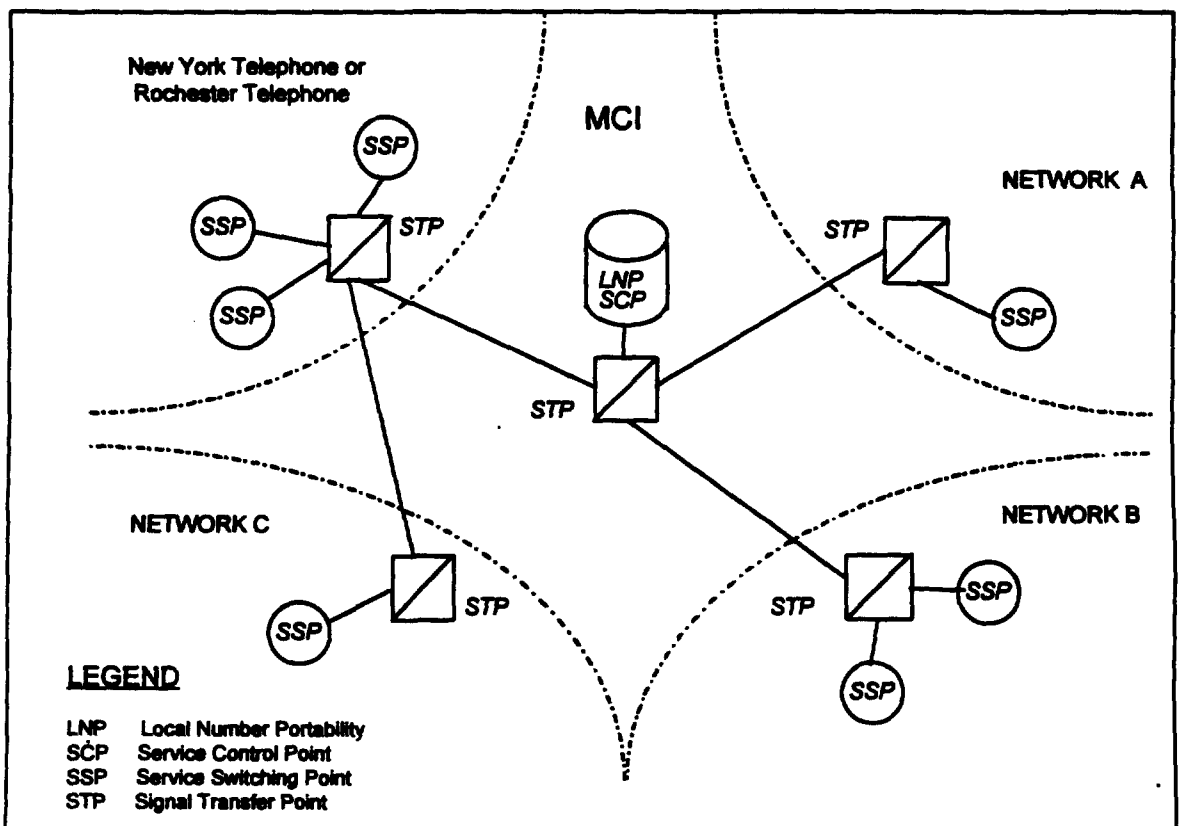

Figure 3.7.3.1-1. LNP SCP SS7 Signaling
with No Direct LNP/SCP Connection to New York or Rochester

Figure 3.7.3.1-2 shows the alternative solution of connecting the LNP SCPs to an STP pair in the New York Telephone and Rochester Telephone networks, in addition to the MCI STPs. With this option, all participating carriers have the choice of connecting directly to the New York Telephone or Rochester Telephone STPs or to the MCI STPs, whichever better fits their needs. This alternative requires a single STP hop for New York Telephone and Rochester Telephone queries, and two STP hops for other participating carriers (assuming they connect to the network via a pair of their own STPs).

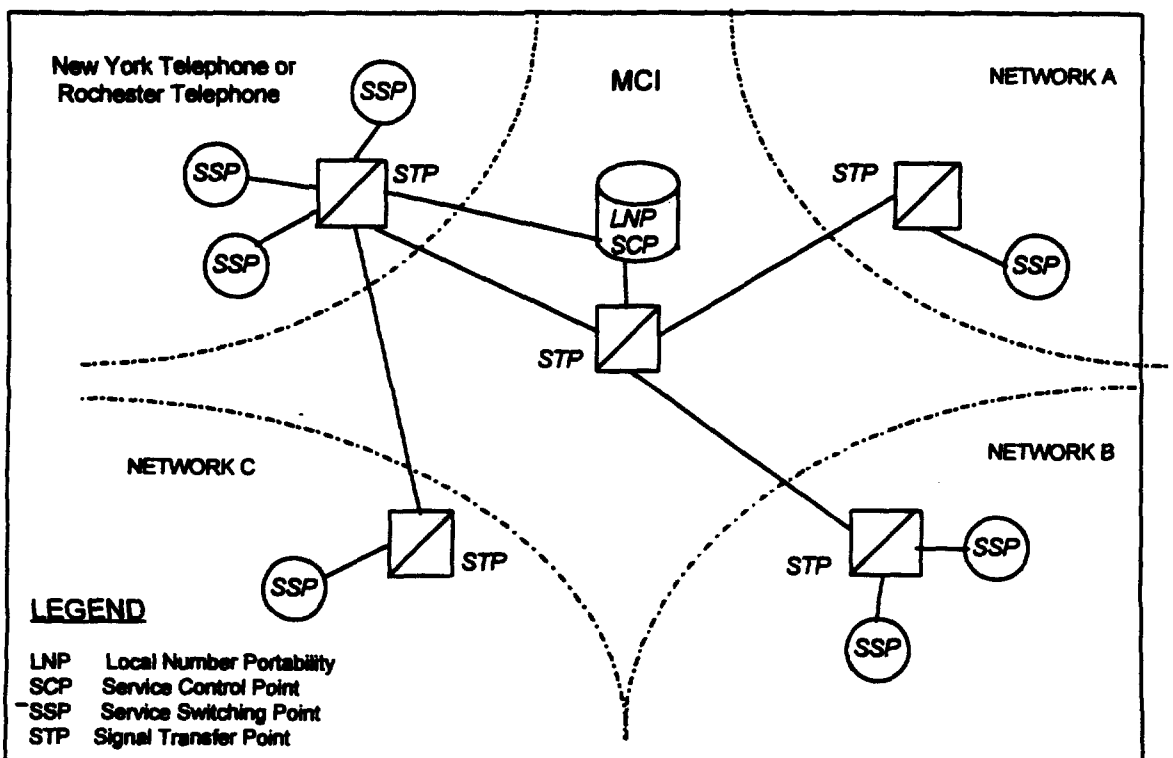

Figure 3.7.3.1-2. LNP SCP SS7 Signaling with Direct LNP/SCP Connection to New York or Rochester

Both of these alternatives make use of existing signaling infrastructure and minimize the need for installing new/dedicated signaling links to participating carriers. Upon award, we will work closely with the Companies to identify the best method of providing LNP database access to all participating carriers.

3.7.3.2. Existing diverse signaling schemes (e.g., ISUP, MF FGC, MF FGD, ...) will continue to be supported. Provider should identify any changes required to existing signaling protocols. Impacts on current standards, if any, should be described.

Our solution, which requires only SS7 protocol to access the LNP database, supports existing signaling schemes (e.g., ISUP, MF FGC, MF FGD, etc.), without modifications.

These schemes can be used for routing the call even after the database query is made. There are no known impacts to any signaling protocol standards.

3.7.4 LNP Database

We propose to use Tandem Computer's LNP SCP, which can simultaneously accommodate both AIN 0.1 and IN message processing on a single platform with a common LNP database. Our solution meets AIN 0.1 requirements listed in Bellcore's TR-NWT-001285 specification, and is also capable of processing IN formatted queries that comply with TR-TSY-00533.

The LNP database is comprised of two data tables. One contains Ported and Vacant Directory Numbers (DNs); the second, Non-ported Directory Numbers. When a query is received, the SCP first uses all ten digits of the DN to search the database containing only Ported and Vacant DNs.

As Table 3.7.4-1 shows, a successful search of this database will retrieve either the CPC of the called subscriber's new Local Service Provider, or it will find that the number is not assigned, and the LNP SCP will return vacant number intercept treatment.

Table 3.7.4-1 Format of Ported Number / Vacant Number Data Table

Directory Number	Carrier Portability Code	Vacant (Y/N)
NPA-NXX-XXXX	XXX	N
NPA-NXX-XXXY	YYY	N
NPA-NXX-XXZZ	—	Y

If the ten digit number is not found in the Ported / Vacant Number table, this indicates that the dialed number is within a portable NXX, but has not been ported (i.e., is still served by the incumbent service provider). The LNP SCP will search the Non-Ported DN data table, as illustrated in Table 3.7.4-2, to determine the CPC for the subscriber.

Table 3.7.4-2 Format of Non-Ported Number Data Table

NPA-NXX	Carrier Portability Code
NPA-NXX1	ZZZ
NPA-NXX2	ZZZ
NPA-NXX3	XXX

This data table structure minimizes the number of 10-digit entries by storing only a CPC for those subscribers who have not changed Local Service Providers.

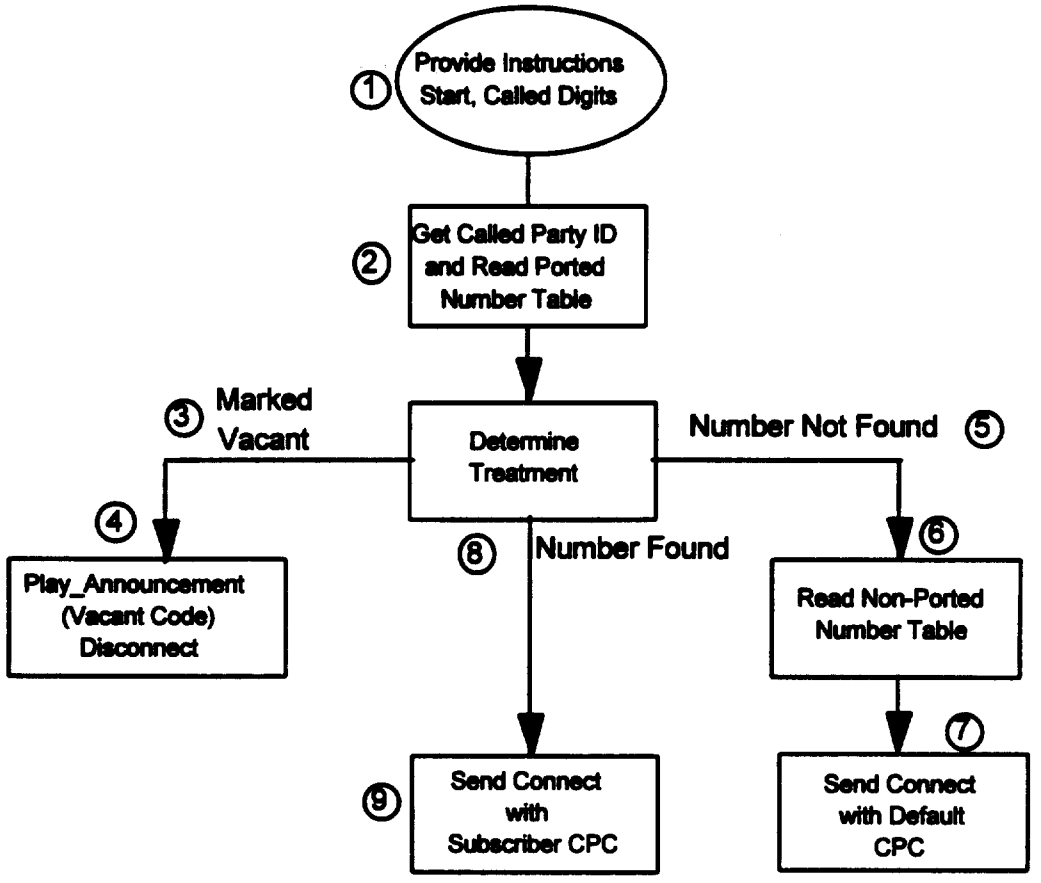

Figure 3.7.4-1. Message Flow Block Diagram for IN TR-NWT-000533

Figure 3.7.4-1 shows SCP call processing for the IN call model, based on TR-TSY-000533. The sequence is as follows:

- Processing begins with the receipt of a *ProvideInstructionStart* message (1).
- The SCP then accesses the Ported Number / Vacant Number data table using the Called digits parameter from the incoming message (2).
- If the number is marked vacant (3), the SCP sends the *PlayAnnouncement* message instructing the querying switch to route the call to the proper vacant number announcement (4).
- If the SCP does not find the number in the Ported Number data table (5), this indicates that the subscriber resides in a portable NXX, but has not moved to a new service provider.

- The SCP then searches the Non-Ported data table to determine the CPC of the subscriber's Local Service Provider (6), and sends the *Connect* message accompanied by the CPC-NXX-XXXX, as a response to the querying switch (7).

- If the number is found in the Ported Number/Vacant Number data table (8), the SCP responds with the *Connect* message containing the subscriber's CPC-NXX-XXXX (9).

Figure 3.7.4-2 shows the SCP call processing for the AIN 0.1 call model, based on TR-TSY-001284 & TR-TSY-001285. The sequence is as follows:

- Processing begins with the receipt of an AIN 0.1 *InfoAnalyzed* message (1).

- If the dialed digits are prefixed with digits such as 0+ or 10XXX (2), the LNP SCP sends a *Continue* message to the querying switch (3), instructing it to route the call to the Operator Services provider or the appropriate IXC.

- If the dialed digits are not prefixed with 0+ or 10XXX, the SCP accesses the Ported Number / Vacant Number data table using the Called digits parameter from the *InfoAnalyzed* message (4).

- If the number is marked vacant (5), the SCP responds with a *SendToResource* message instructing the querying AIN 0.1 switch to route the call to the proper vacant number announcement (6).

- If the number is not found in the Ported Number / Vacant Number data table (7), this indicates that the subscriber resides in a portable NXX, but has not moved to a new service provider. The SCP then searches the Non-Ported data table to determine the CPC of the subscriber's Local Service Provider (8), and sends the *AnalyzeRoute* message containing the CPC-NXX-XXXX to the querying switch (10).

- If the number is found in the Ported Number / Vacant Number data table (9), the SCP responds with the *AnalyzeRoute* message containing the CPC-NXX-XXXX (10).

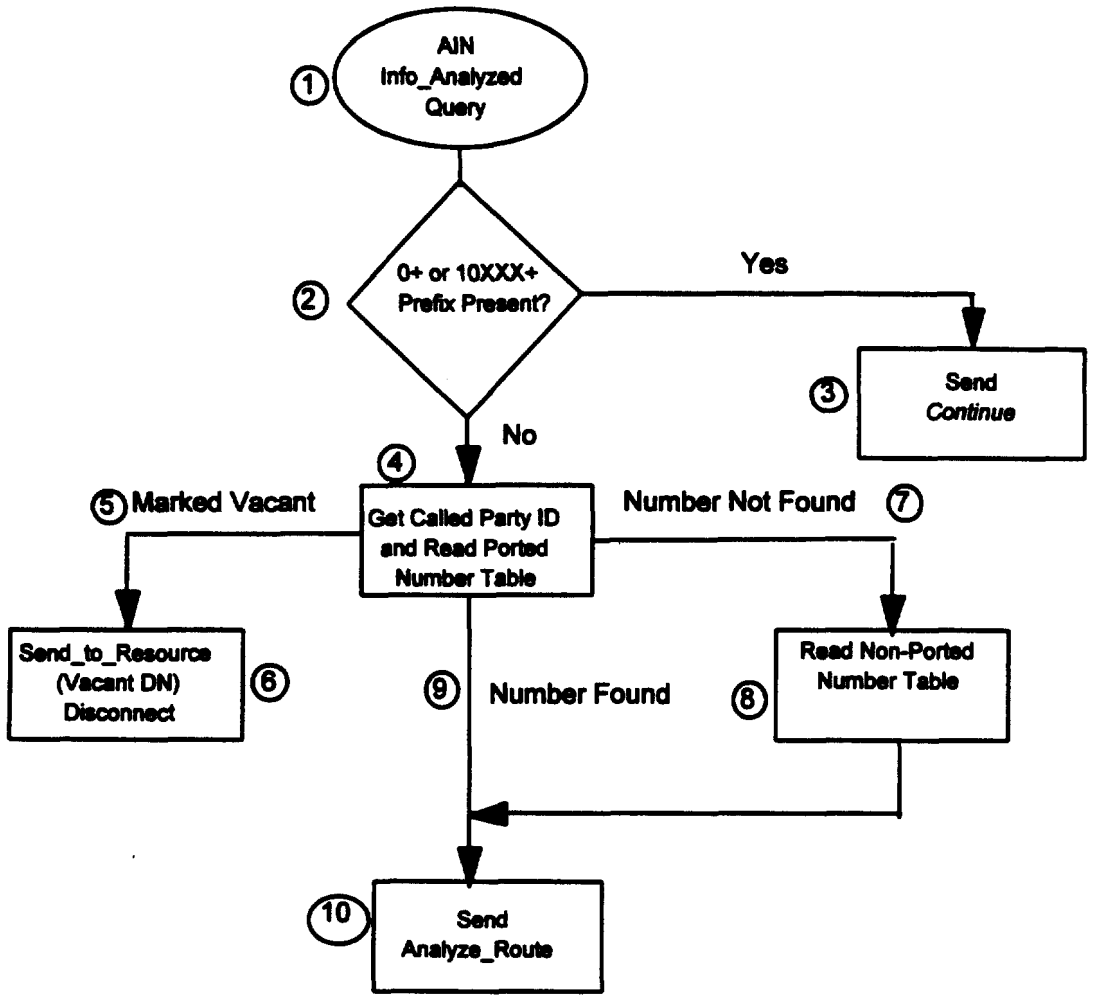

Figure 3.7.4-2 Message Flow Block Diagram for AIN 0.1 with 6-Digit PODP (NPA NXX) Trigger

3.7.4.1. The LNP database is a vital component of this technical trial. Specifically, the Provider shall equip the trial environment with a network database capable of processing LNP queries from LNP-capable switching offices. Some guidelines for the interface requirements between the LNP database and the LNP-capable switches are given in the Switching section above.

For the trial database, we will use a Tandem Computer SCP that is capable of processing LNP queries from LNP-capable offices. This LNP SCP satisfies the interface requirements described in Paragraphs 3.7.2 through 3.7.2.4.

3.7.4.2. The trial environment shall emulate the wide-scale deployment of SS7 network databases to the extent practicable. The Provider is expected to provide at

least a mated pair of SS7-based LNP databases, which will be connected by A links to a mated pair of home STPs respectively.

Our system configuration includes a mated pair of SS7-based LNP SCP databases capable of emulating wide-scale deployment of network databases. The configuration provides for connectivity via A links to a mated pair of home STPs. Although we have assumed (see Paragraph 3.5.3) that the home STP pair for the trial will be the an existing MCI gateway pair located in New York State, we are prepared to link the LNP SCPs to other STPs, as required by participating carriers.

3.7.4.3. The performance of the LNP database will also be key. The Provider shall provide system component details (e.g., system availability, TCAP response time, cross-office delay, peak load in transactions per second, etc.) for this trial. Provider are also encouraged to provide evidence of their experience in providing similar network solutions. The Provider's proposed solution should minimize added delay, which should be equivalent for ported and non-ported numbers in an NPA-NXX.

The LNP database will reside on Tandem Computer hardware. This SCP vendor has more than six years of experience in deploying reliable SCPs in live IN networks and has provided solutions for SCP databases containing more than one million subscribers. Tandem Computers is a leader in high-transaction-volume processing, currently providing SCP applications for E800 services, calling card services, home-location registers, and private virtual networks for IN networks around the world.

Our LNP SCP is sized to meet the trial's estimated peak load, but is scaleable to accommodate increases in volume or peak load. If the volume of LNP queries increases beyond our estimates, we will re-size the SCP and provide the necessary processing and support elements to support the increased query volume.

We estimate our TCAP response time to 150 to 300 milliseconds, based on a LNP SCP sized to accommodate the trial's estimated peak load.

Each of our LNP SCP nodes consists of an SS7 communications front-end processor and a massively parallel, fault-tolerant, high-speed transaction processor. The SS7 processor physically links the LNP SCP node to the SS7 network. The LNP database application resides on a SCP platform running on the transaction processor. The SCP platform provides node management, an alarming subsystem, and an application execution environment. Our LNP SCP application will contain a call-processing module, a transaction-logging subsystem, database servers, an audit-logging subsystem, node-management reporting capability, and a database-synchronization module.

The Tandem SCP platform can simultaneously run multiple call processing applications, for example, LNP and E911. Operational changes may be made to each application independently of other applications. For instance, if a Tandem SCP platform is running

E911, an LNP application can be started, trialed, and stopped without affecting the existing E911 application.

Figure 3.7.4.3-1 illustrates the Call Processing flow within the SCP; Table 3.7.4.3-2 provides additional information about each state bubble shown in the figure.

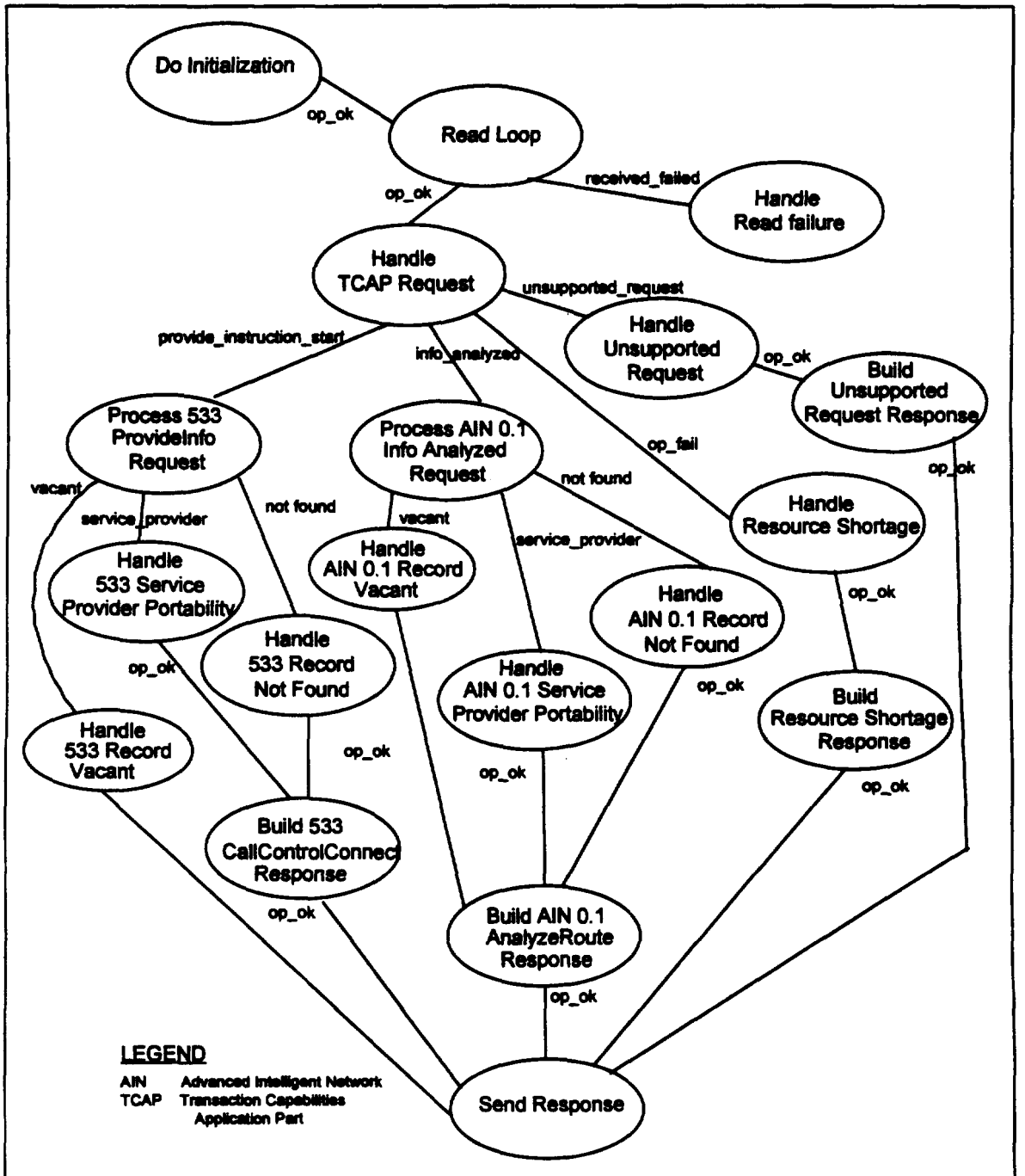

Figure 3.7.4.3-1. Flow for Call Processing (CP)

Table 3.7.4.3-1. State Bubble Function Description Table

State Flow Bubble	Function
Do Initialization	Performs all initialization for Call Processing.
Read Loop	The Read Loop is where the LNP script is initiated. It receives the TCAP messages from the SCP
Handle Read Failure	Performs all tasks associated with a read failure from the SCP.
Handle TCAP Request	Parses the TCAP request to determine if the request is supported. If supported, it branches according to the request type. If not, it branches to response with an "unsupported request" response. Also determines if a resource shortage (overload) condition is present.
Handle Unsupported Request	Gathers information to build an unsupported request response.
Build Unsupported Request Response	Builds an unsupported request response.
Handle Resource Shortage	Gathers information to build a resource shortage response.
Build Resource Shortage Response	Builds a resource shortage response.
Process 533 Provide Info Request	Processes a TR-NWT-0000533 Provide Info Request and reads the Ported Number / Vacant Number data table. If a record is found, it branches to the appropriate portability (only service provider at this time) handler for a 533 request. If no record is found, it reads the Non-Ported DN data table to get the default CPC.
Handle 533 Service Portability	Gathers information to build a 533 Call Control Connect response for service portability translation. Also handles transaction logging and statistic processing.
Handle 533 Record Not Found	Gathers information to build a 533 Call Control Connect response for record not found. Also handles transaction logging and statistic processing.
Handle 533 Vacant	Gathers information to build a 533 Send Response for record marked as Vacant.
Build 533 Call Control Connect Response	Builds a 533 Call Control Connect response.
Process AIN 0.1 Provide Info Request	Processes an AIN 0.1 *InfoAnalyzed* Request and reads the Ported Number / Vacant Number data table. If a record is found, it branches to the appropriate portability (only service provider at this time) handler for a AIN 0.1 request. If no record is found, it reads the Non-Ported DN data table to get the default CPC.

Table 3.7.4.3-1. (Continued)

State Flow Bubble	Function
Handle AIN 0.1 Service Portability	Gathers information to build a AIN 0.1 *AnalyzeRoute* response for service portability translation. Also handles transaction logging and statistic processing.
Handle AIN 0.1 Record Not Found	Gathers information to build a AIN 0.1 *AnalyzeRoute* response for record not found.
Handle AIN 0.1 Record Vacant	Gathers information to build a AIN 0.1 *AnalyzeRoute* response for record Marked as Vacant.
Build AIN 0.1 *AnalyzeRoute* Response	Builds a AIN 0.1 *AnalyzeRoute* response.
Send Response	Sends the response.

We provide a Transaction Logging subsystem as a message tracing facility for call processing. Transaction information is captured and stored to provide information for resolving operational problems. This component is controlled at both the global level and the subscriber level.

We provide an Audit Logging subsystem to generate a history of changes to subscriber data. Audit logging records adds, deletes, and updates to the LNP data tables. Entries in the log are kept on a per-user basis, with details of the before and after images of any modified data.

A database synchronization module supports the replication of LNP Data across multiple LNP SCP nodes. This module sends synchronization update messages via the X.25 link between the LNP SCP nodes.

A simple, graphical user interface enables the operational staff to access the LNP database and SCP functions. This interface may also be used for provisioning the LNP SCP database in the absence of an automated service-management facility.

3.7.4.4. The database must respond so as to allow the querying switch to properly route each call for which a query is made.

Our database contains all routing and billing information required to respond to a LNP query from LNP-capable switches, including both AIN 0.1-based SSPs and IN-based SSPs. We will request that participating Companies provide any information required by their LNP-capable switches for routing and billing within 30 days of the award.

When our LNP SCP receives an SS7 query, it validates the message, passes the TCAP message, and branches according to the type of TCAP message received. Next, it reads the database for the called number, gathers information to send the correct response, builds the response message, and returns the response to the querying switch.

3.7.4.5. The amount of provisioning required to open an exchange to portability will also be considered in evaluating Provider' proposals.

When an exchange is opened to subscriber portability, changes are required in the following four network elements:

- each LNP-capable switch that routes on a six-digit basis to the exchange
- the donor switch (i.e. the switch that "owns" the NPA-NXX, as defined in the Local Exchange Routing Guide, or LERG)
- all network STPs
- the LNP database.

The sequence of these activities will require discussion, which has been scheduled as an activity to be initiated at the trial inaugural meeting (APPENDIX D, item 16).

Each LNP-capable switch that routes to the newly ported exchange on a six-digit basis must mark the exchange as portable. In the AIN 0.1 case, this is done by adding the NPA-NXX to the PODP trigger list. IN variations will be platform specific; marking an NPA-NXX as portable causes the switch to begin querying all calls to the exchange.

The donor switch must begin querying intraswitch calls to the NPA-NXX. The AIN 0.1 implementation can be performed on a 6-digit or 10-digit basis. In the 6-digit case, the newly portable NPA-NXX is placed into the PODP trigger list. For 10-digit triggering, each vacant DN is added to the PODP trigger list. As DNs are ported away from a switch using 10-digit PODP triggers, each ported DN must be added to the PODP trigger list. Similarly, with IN-equipped switches, the NPA-NXX (6-digit basis) or each ported and vacant DN (10-digit basis) must be marked as requiring LNP queries. As a fail-safe measure, all Directory Numbers that have been marked vacant in the LNP database must be set at the donor switch to query the database for terminating attempts. This will capture calls to ported numbers that should have been rerouted to another Local Service Provider but were not due to a failure at some point in the call routing.

Each STP must be prepared to support 10-digit Global Title Translation for calls to the new portable NPA-NXX. No other initialization work is required on a per-exchange basis.

Information on currently vacant DNs in the newly portable exchange must be copied into the LNP Database. Our solution requires no other NPA-NXX initialization work, provided the donor switch is using an interface compliant to TR-TSY-000533 or TR-NWT-001285.

3.7.5. Call Transport

[No RFP Paragraph provided]

As indicated in Paragraph 3.5.3, our LNP model does not require any new routes or additional trunking for the trial. The existing trunks, either ISUP or MF, are fully compatible as they exist in the network today.

3.7.5.1. It is assumed that no new routes or additional trunking are required for this trial. If direct end office (End Office) to End Office connectivity does not exist, the Provider shall take advantage of existing trunking and networking hierarchy via access tandem/hub routes.

No new connectivity is required for any existing switch involved in this trial, based on the assumptions in Paragraph 3.5.3. Where direct connectivity is not available between two switches involved in the trial, our solution uses the access tandem for routing. Furthermore, for older switches that may not have SS7 or ISUP capabilities, database queries are performed by an access tandem using either IN or AIN 0.1 triggers.

3.7.5.2. The local service providers participating in this trial will be responsible for arranging connectivity between their central offices and the customer premises equipment serving ported numbers. The Provider is required to update the LNP trial database in coordination with the transfer of local service from one provider to another.

Although each participating Local Service Provider will be responsible for arranging connectivity between its central offices and the customer-premises equipment serving ported numbers, we will coordinate all database updates necessary to move a customer from one service provider to another. Updates must be made to the LNP database, the STPs (for GTT), and switch-routing data. We will update the LNP database with the subscriber's correct Carrier Portability Code (CPC), enabling all calls to route to the correct service provider. As noted in Paragraph 3.5.4., we already have some experience on this subject, and have developed a process that will minimize the impact to the ported subscriber. We will share details of this process with the other participants to determine its applicability for the trial. This topic is the subject of a technical forum to be held as part of the inaugural meeting (APPENDIX D, item 8). Paragraphs 3.5.3 and 3.7.1 also discuss this subject.

3.7.6. Operations and Billing

Provider should describe how their proposed solutions will maintain the integrity of existing recording capabilities. AMA records and ANI should reflect the ported number and Provider should describe any known impacts on settlements between carriers or other billing related issues. It is assumed that existing operations and

billing capabilities of the trial participants will be used for this trial. Preference will be given to proposals that do not require extensive changes to existing structures.

Our solution allows both measured billing and bulk-rate billing methods as they exist today. The Carrier Portability Code (CPC) is used only for routing and does not affect the calling party's ANI in any way. Our solution uses AMA-record billing, and the AMA record will reflect the actual ANI of both the ported number and the dialed number.

We will make every possible effort to minimize impacts to the embedded billing and settlement processes. Depending on the capabilities of different switching systems, minor modifications may be required in some carriers' switches to create the appropriate AMA record, but we will work with vendors to identify the required modifications. Reviewing billing-related issues is an early pre-trial action item (APPENDIX D, Item 21.6).

3.7.6.1. Operations and Billing

Provider must be in full compliance with all NYPSC rules, regulations and principles concerning privacy. Provider will not acquire any ownership rights in the database information. At the conclusion of the trial, all database information will be returned to the companies providing the information. Provider will not have any right to use the database information in any way whatsoever except as necessary to conduct the trial.

We will comply with NYPSC Case #90-C-0075 "Proceeding on Motion of the Commission to Review Issues Concerning Privacy in Telecommunications," March 22, 1991, as modified on September 20, 1991, by NYPSC's "Modification and Clarification of Statement of Policy on Privacy in Telecommunications." We also comply with all NYPSC rules, regulations, and principles concerning privacy, and with Answer Number 39 to this RFP.

MCImetro agrees not to use the database information in any way whatsoever except as necessary to conduct the trial. All information obtained from the Companies will be treated confidentially and will be returned at trial conclusion.

3.7.7. Supported Services and Features

The Provider's solution should not adversely impact existing services and features. The Provider shall conduct test calls, with various call types and feature mix, to ensure that the introduction of LNP be compatible with the embedded services and be transparent to the trialed lines.

We developed our solution recognizing the critical importance of compatibility and transparency with embedded services and features. We have tested numerous scenarios to ensure service and feature compatibility, and will continue these tests in preparation for

the trial. Paragraph 3.12 details our evaluation of services and feature interactions, as well as the methods we used. Paragraphs 3.8 through 3.8.7.4 address other feature interactions with illustrative call scenarios.

3.8. Illustrative Call Scenarios

Some representative LNP call scenarios are shown below. Provider should provide detailed call flows for each of the following scenarios. The Provider is encouraged to propose additional or alternative database-driven call scenarios for this trial as well.

This section provides details of the call-flow scenarios listed in the RFP paragraphs 3.8 through 3.8.7.4, along with an additional paragraph, 3.8.8, which describes the flow of a call to an un-ported number in an NXX marked as portable. Because the scenarios shown in the RFP are presented only as examples, our call flows may not correspond precisely to them. However, to meet the paragraph-by-paragraph response requirement of RFP Paragraph 3.2, we have matched our steps as closely as possible to the steps in the numbered RFP paragraphs. In some cases this results in more than one of our steps appearing under a numbered RFP step. In other instances the RFP may have more process steps than our proposed call scenarios.

Figures 3.8.1.1-1 through 3.8.8-1 use circled numbers to denote call-flow segments. The same numbers appear in parentheses in our text response referring to the corresponding figure. All figures use "broken lines" to depict connectivity prior to subscriber porting. Call-flow figures, with the exception of Figure 3.8.1.1-1, do not include the STP or its network connections, as this component is not needed to show the flow of the LNP call.

3.8.1. Local Calls

[No RFP Paragraph provided]

The following scenarios illustrate local calls.

3.8.1.1. Interswitch

The figure below shows an interswitch call. Assume that station B is the tested line. Its number, (212)335-1234, was originally assigned as part of the 212-335 NXX to Local Service Provider (LSP) 1 End Office (EO) 2 and has been ported onto LSP2 EO1.

Figure 3.8.1.1-1 illustrates call flow for an interswitch call (i.e., between multiple switches and/or multiple Local Service Providers). This call case has been successfully tested at the MCI laboratory. In a broad-scale implementation, it is very likely that each service provider will have its own STP/SS7 network.

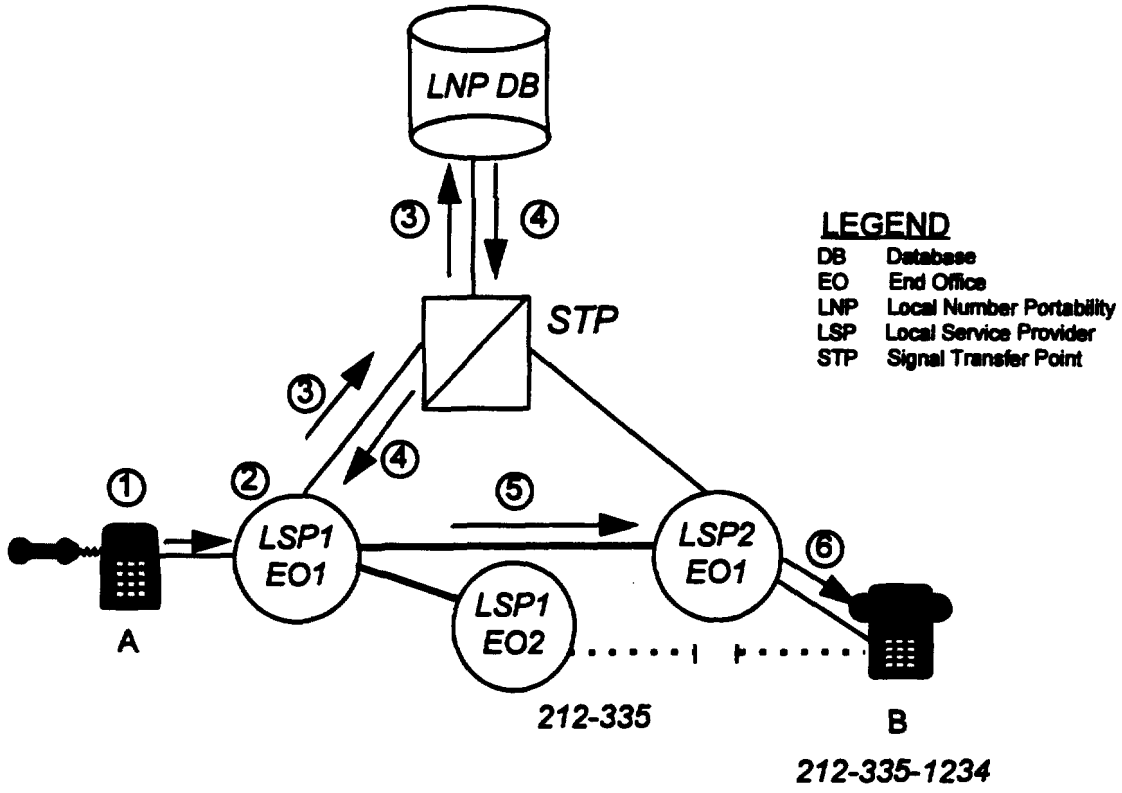

Figure 3.8.1.1-1. Flow for an Interswitch Call

[This space intentionally left blank.]