Figures 3.8.1.1-2 and 3.8.1.1-3 illustrate the message flows for this call type using AIN 0.1 PODP and IN triggering schemes, respectively. These two message-flow figures provide flow information at a fine-grained level of detail. In the interest of brevity, and because of the similarity of the message flows of each type of call, message flows are not illustrated for other call scenarios. Also, Figure 3.8.1.1-1 includes the STP as a reference to the message flows. Subsequent call flow figures will not show the STP or its connections.

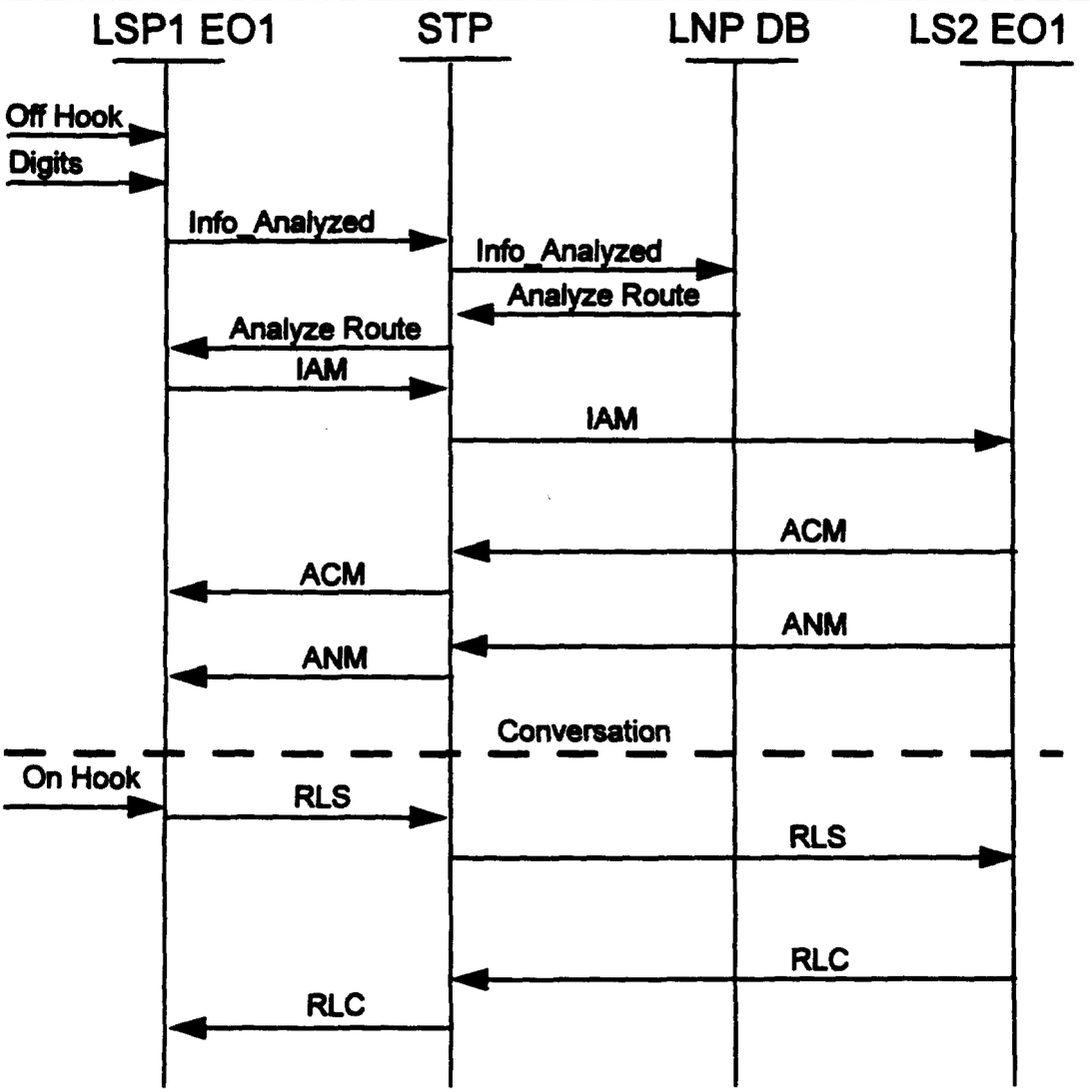

LEGEND

AIN	Advanced Intelligent Network	LNP	Local Number Portability
ACM	Answer Complete Message	LSP	Local Service Provider
ANM	Answer Message	PODP	Public Office Dialing Plan
DB	Database	RLC	Release Complete
EO	End Office	RLS	Release
IAM	Initial Address Message	STP	Signal Transfer Point

Figure 3.8.1.1-2. AIN PODP Message Flow

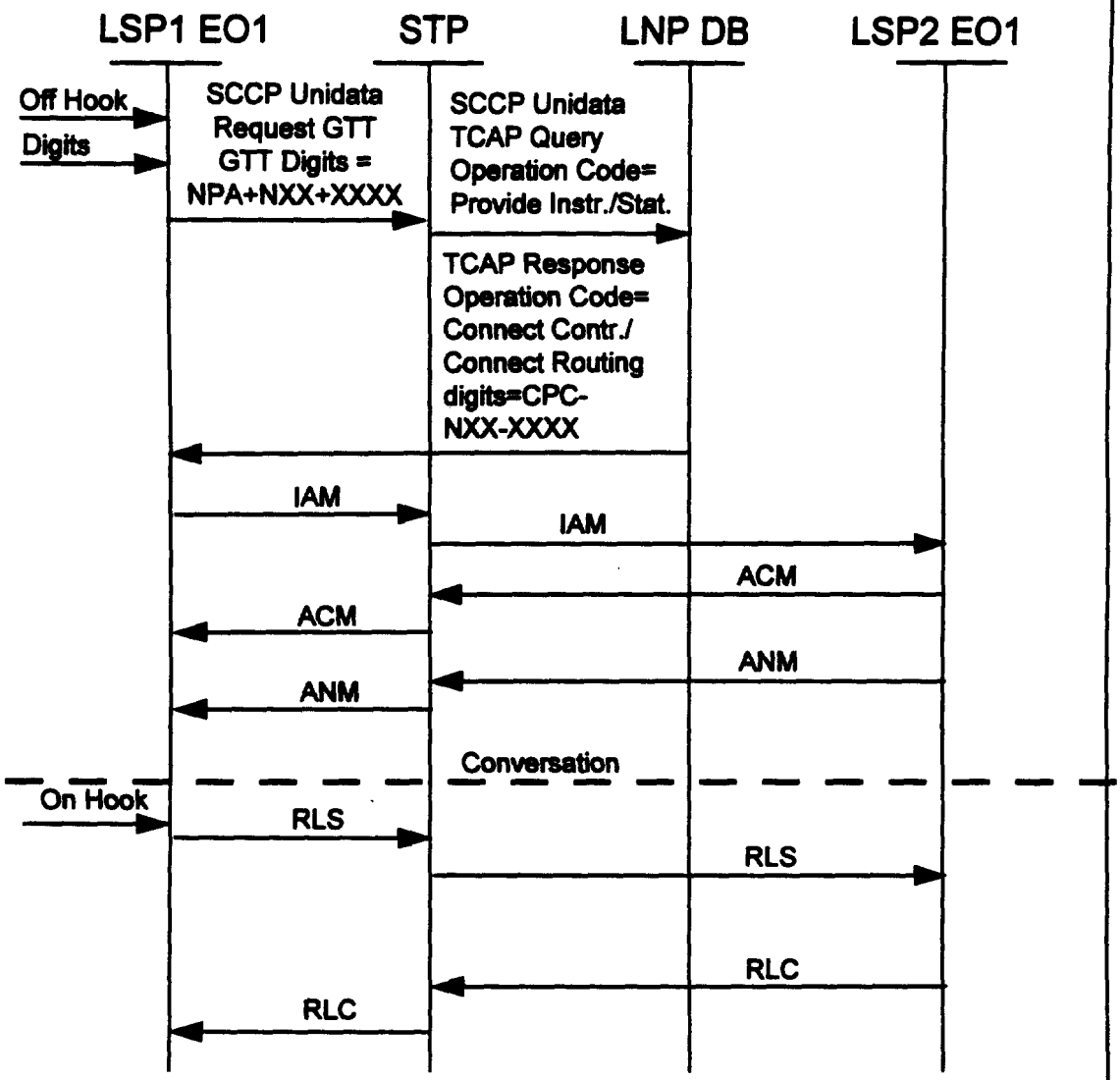

LEGEND

ACM	Answer Complete Message
ANM	Answer Message
CPC	Carrier Portability Code
DB	Database
EO	End Office
GTT	Global Title Translations
IAM	Initial Address Message
LNP	Local Number Portability
LSP	Local Service Provider
RLC	Release Complete
RLS	Release
SCCP	Signaling Connection Control Part
STP	Signal Transfer Point
TCAP	Transaction Capabilities Application Part

Figure 3.8.1.1-3. 800 IN Message Flow

3.8.1.1.1. A calls B. A dials 335-1234. LSP1 EO1 performs digit analysis, and based on the dialed number, recognizes that it is a local call, and that an LNP database query is required. (For the trial, it is assumed that all calls destined to the trial offices NPA-NXX require LNP database queries).

Referring back to Figure 3.8.1.1-1, the call flow begins when Subscriber A dials the number for Subscriber B, 335-1234 (1).

The MCImetro model uses 6 digit (NPA-NXX) analysis for determining which calls require LNP database queries. Except for intra-switch calls, which do not require a database query using the IN method, all calls to the trial NPA-NXXs result in an LNP database query. Paragraphs 3.6 and 3.8.1.2 contain related information about this scenario.

Our ability to perform 10-digit (NPA-NXX-XXXX) analysis to determine if a call requires a LNP database query enables us to reduce the number of calls that would be queried; however, the tradeoff is increased datafill requirements at the switches. We will discuss the feasibility of using 10-digit analysis with the participating Companies in the pre-trial stage.

3.8.1.1.2. An SS7 TCAP query is sent to the LNP database. The query should contain the called party DN (station B).

LSP1 EO1 performs digit analysis. Based on the dialed number, it recognizes a local call to a portable NPA-NXX (2), and launches a query to the LNP database (3). The query to the LNP database includes the complete 10-digit called-party number, NPA-NXX-XXXX.

3.8.1.1.3 The LNP database receives the query, performs a lookup into the LNP ported numbers table and returns routing information to the LSP1 EO1.

The LNP database receives the query, checks the dialed NPA-NXX-XXXX in its database, and returns the corresponding CPC-NXX-XXXX (4).

3.8.1.1.4. LSP1 EO1 receives the response and routes the call to LSP2 EO1.

LSP1 EO1 receives the LNP response containing the CPC-NXX-XXXX. Based on the CPC-NXX, LSP1 EO1 routes the call to LSP2 EO1 (5).

3.8.1.1.5. LSP2 EO1 terminates the call to B.

LSP2 EO1 receives the call, retranslates the CPC back to NPA, and terminates the call to Subscriber B (6).

3.8.1.2. Intraswitch

The figure below shows an intraswitch call:

Figure 3.8.1.2-1 is a call flow for an intraswitch call (i.e., one that involves only one switch). This call case has been successfully tested at the MCI laboratory. Our call flow for this case differs from the RFP call flow because our solution does not require a database query for an intraswitch call using the IN method. This yields a performance advantage over models that require database queries for intraswitch calls. Our AIN 0.1 method does not differ from the interswitch example discussed in Paragraph 3.8.1.1. A query to the LNP SCP is required.

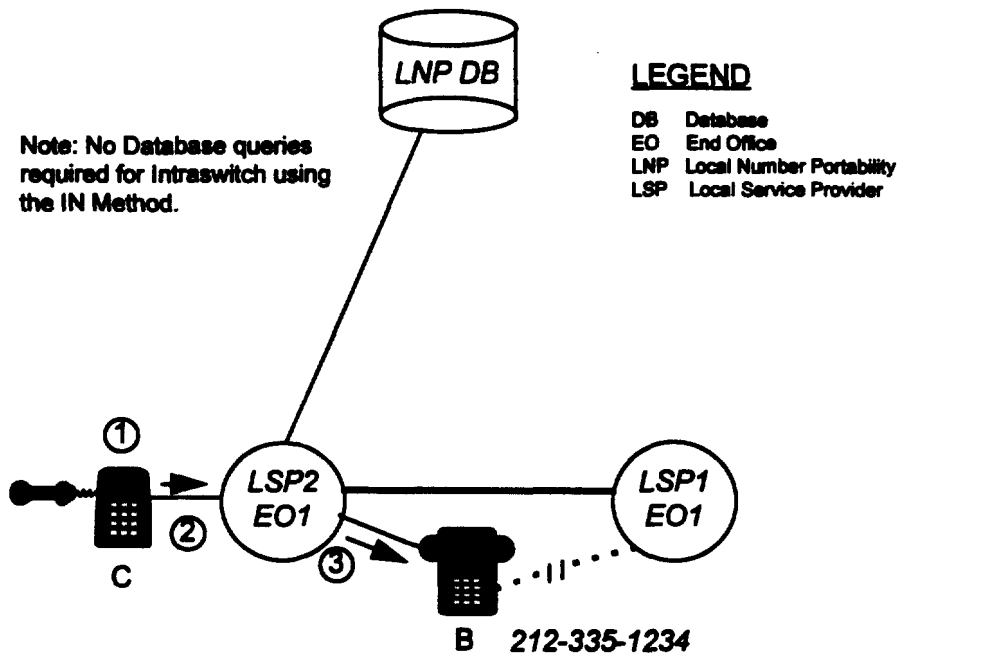

Figure 3.8.1.2-1. Flow for an Intraswitch Call

3.8.1.2.1. Caller C on LSP2 EO1 dials 335-1234 to reach B.

Subscriber C on LSP2 EO1 dials 335-1234 to reach Subscriber B on LSP2 EO1 (1).

3.8.1.2.2. The LSP2 EO recognizes 335 as an exchange opened to portability and queries the LNP database using the full 10-digit number. Alternatively, the LSP may choose to determine that a call to a NXX opened to portability terminates on the originating switch and forgo a LNP database query.

LSP2 EO1 receives the call from Subscriber C and performs digit analysis. Based on the dialed number, it recognizes a local call to a portable NPA-NXX (2). Using the IN method, the switch can determine that the dialed number resides in its own switch, and therefore an LNP database query is not required. Only using the AIN 0.1 method does LSP2 EO1 initiate a query to the LNP database.

3.8.1.2.3. The LNP database returns the Routing Number.

If the LNP SCP has been queried because LSP2 EO1 is using the AIN O.1 method, the LNP database returns the CPC-NXX-XXXX associated with LSP2 EO1.

3.8.1.2.4. LSP2 EO1 recognizes the Routing Number as associated with itself and terminates the call to station B.

Using IN with our model, LSP2 EO1 terminates the call to Subscriber B(3) without querying the database. This performance advantage greatly reduces traffic on the existing SS7 links without adversely affecting subscribers.

In our AIN 0.1 model, the LSP2 EO1 recognizes the CPC as one of its own and terminates the call to Subscriber B (3).

3.8.2. Toll Call Flow

[No RFP Paragraph provided]

The following scenarios depict toll calls [i.e., calls involving an interexchange carrier (IXC) transporting some portion of the call].

3.8.2.1. [First RFP paragraph 3.8.2.1] **D calls B. D dials (212) 335-1234. LSP3 routes call to D's pre-subscribed IXC1. IXC1 dips into the LNP trial database**

Figure 3.8.2.1-1 shows a toll call in which the IXC has direct connectivity to the LSP that terminates the call. This call case has been successfully tested at the MCI laboratory. A call originates in LSP3; traverses the IXC network, which performs a database query; and then is routed to the correct LSP in the terminating LATA.

The sequence begins when Subscriber D dials 212-335-1234 to reach Subscriber B (1). LSP3 recognizes this as a "1+" call and routes it directly to Subscriber D's prescribed IXC1 (2). IXC1 determines that the NPA-NXX sent from LSP3 is portable (3), and queries the LNP database (4).

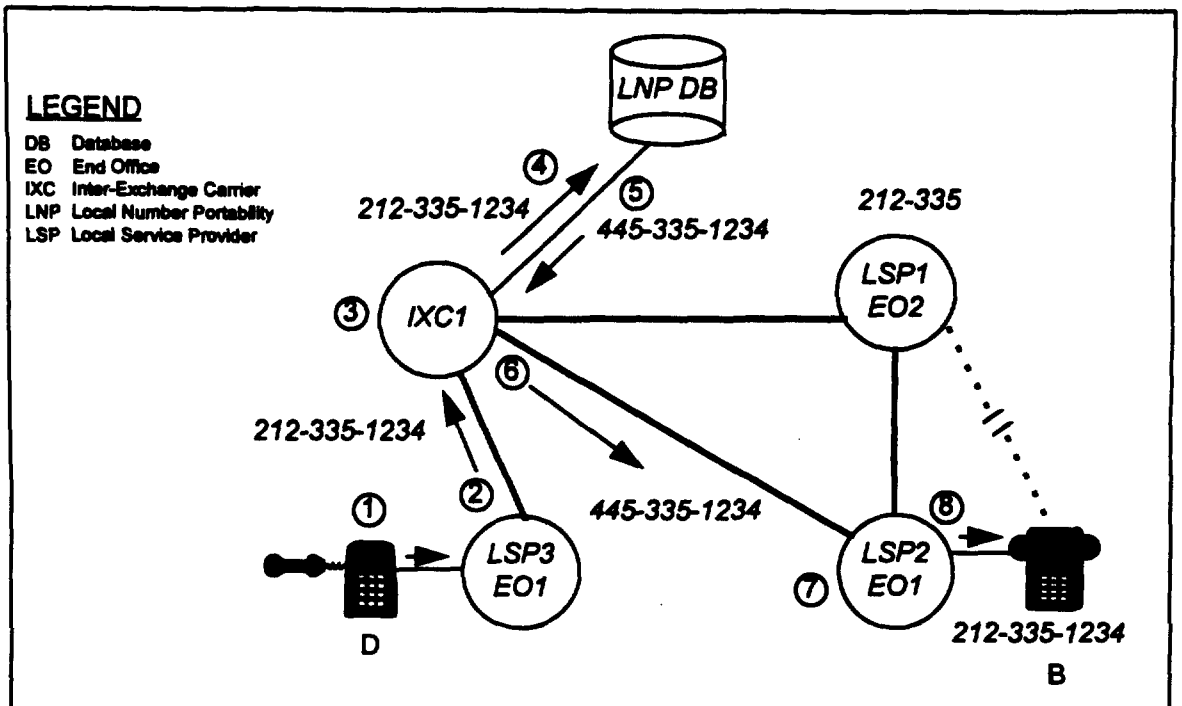

Figure 3.8.2.1-1. Flow for an Inter-LATA Call with Direct IXC Connectivity

3.8.2.2. [First RFP paragraph 3.8.2.2] **The LNP trial database returns to the querying IXC1 switch the Routing Number.**

The LNP database responds to the query by returning the CPC-NXX-XXXX for the subscriber number (5).

3.8.2.3. If direct connectivity exists between IXC1 and LSP2, the IXC1 switch routes call to LSP2 EO1 (3.8.2.1.), otherwise (3.8.2.2) the IXC1 switch routes call to a connected LSP (e.g., LSP1) access tandem, which in turn routes the call to LSP2.

Because direct connectivity exists between IXC1 and Subscriber B's new Local Service Provider, IXC1 uses the CPC-NXX to route the call to LSP2 EO1 (6).

3.8.2.4. LSP2 EO 1 terminates call to station B

LSP2 EO1 determines that this number is in its switch (7) and terminates to Subscriber B (8).

3.8.2.1. [Second RFP paragraph 3.8.2.1] **Direct IXC Connectivity**

The preceding paragraphs 3.8.2.1 through 3.8.2.4 explain the direct connectivity case for an Inter-LATA call.

3.8.2.2. [Second RFP paragraph 3.8.2.2.] **Indirect Connectivity**

Figure 3.8.2.2-1 shows indirect IXC connectivity to the LSP via an access tandem. This situation typifies IXCs that do not have direct connectivity to all Local Service Providers in the area and must hand off some calls to the access tandem, which then terminates them to the correct Local Service Provider. This call originates in LSP3, traverses the IXC network where a database query is performed, and is then terminated to an access tandem that routes it to the correct LSP in the terminating LATA. Alternatively, the access tandem could perform the database query if the IXC lacks this capability.

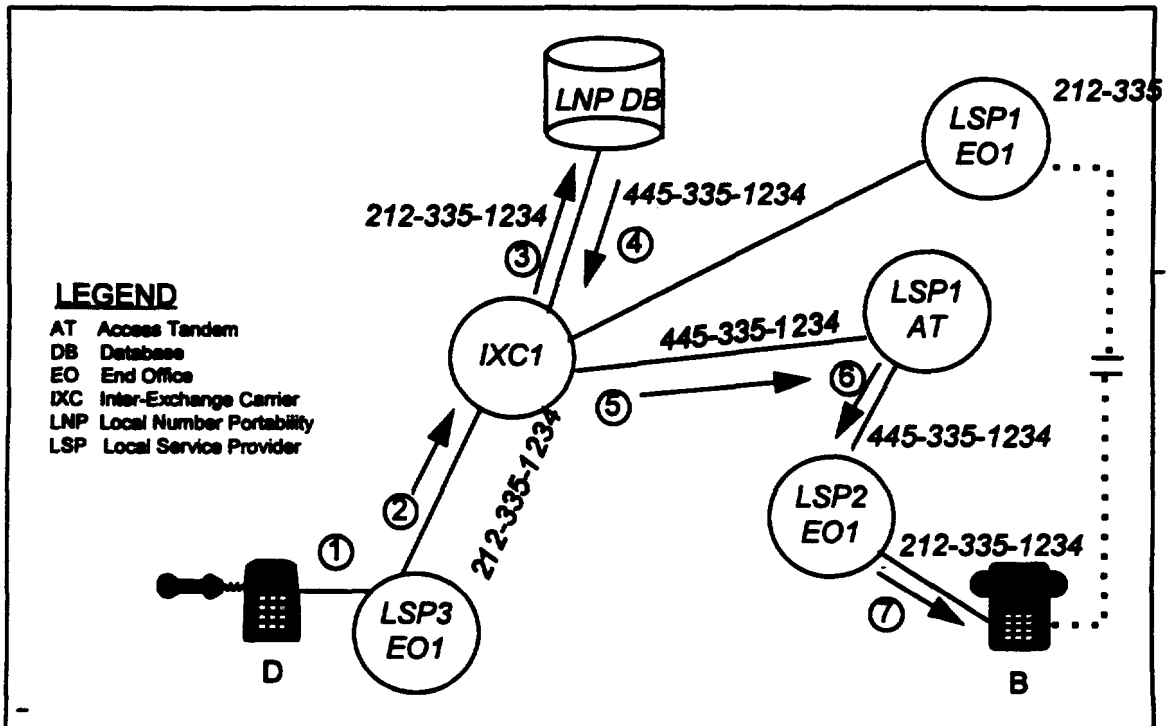

Figure 3.8.2.2-1. Flow for an Inter-LATA Call with Indirect IXC Connectivity

Subscriber D dials 212-335-1234 to reach Subscriber B (1). LSP3 views this 1+ call and routes it to Subscriber D's presubscribed IXC1 (2). IXC1 determines that the NPA-NXX sent from LSP3 is portable, and performs a database query to the LNP database (3). The LNP database returns the CPC-NXX-XXXX for the subscriber number (4). Because IXC1 does not have direct connectivity with the correct LSP, LSP2, it routes the call to an access tandem, LSP1 access tandem (AT) (5). LSP1 AT uses the CPC-NXX to route the call to LSP2 (6). LSP2 EO1 determines that this number is in its switch and terminates the call to Subscriber B (7).

Alternatively, the IXC may hand the call to an access tandem to perform the database query before routing to the correct Local Service Provider. That call case is depicted in Figure 3.8.6.6-1 and described in Paragraph 3.8.6.6.

3.8.3. 500, 800, 900 Calls

Provider should describe impacts on outbound and inbound 500, 800 and 900 calls.

Figure 3.8.3-1 depicts an inbound 800 call flow to a ported number. The call originates in LSP1 (New York or Rochester Telephone) and is transported to the correct IXC (such as MCI) which performs the LNP database query. The IXC terminates the call to the correct Local Service Provider such as LSP3.

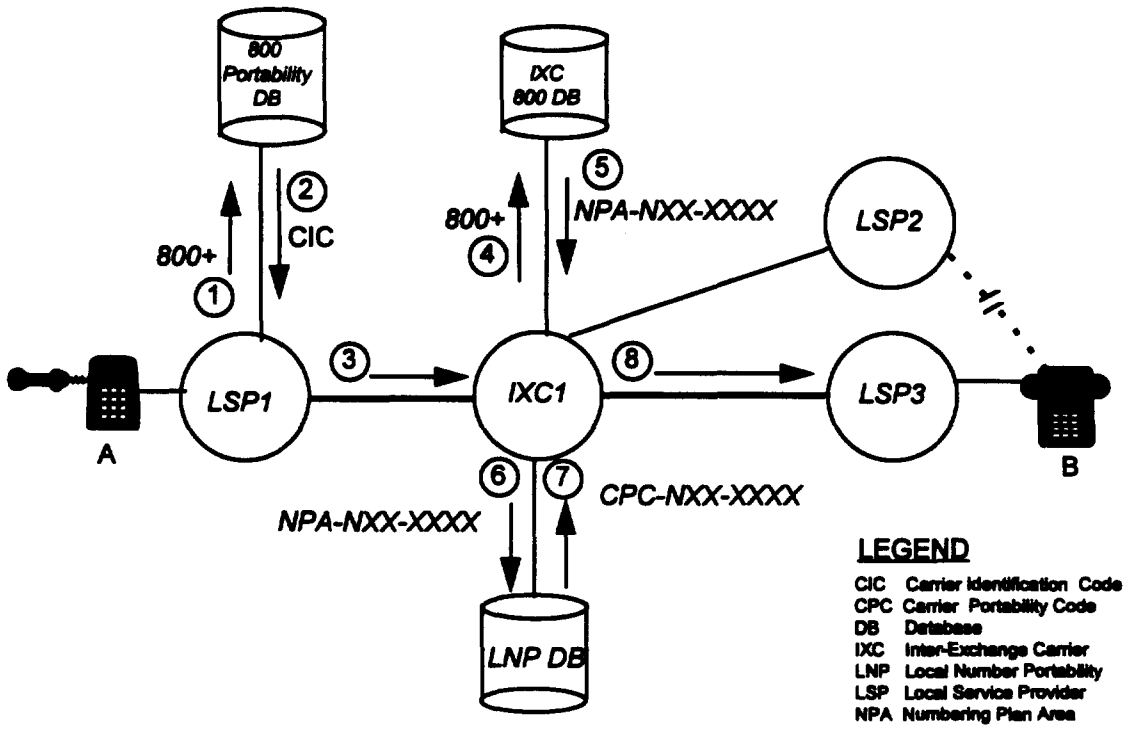

Figure 3.8.3-1. Flow for an 800 Call

Subscriber A dials 800+seven digits to reach B. LSP1 queries a database to determine the Carrier Identification Code (CIC) to reach the correct IXC (1) and the database returns the CIC to LSP1 (2). LSP1 routes the call to the correct IXC, IXC1 (3). IXC1 queries the 800 database to translate the dialed 800 number (4) and the 800 database returns the NPA-NXX-XXXX for the dialed 800 number (5). IXC1 determines that this NPA-NXX is portable, and launches a query to the LNP database (6). The LNP database returns the CPC-NXX-XXXX to IXC1 (7). IXC1 then routes the call to the correct LSP, LSP3 (8).

This is one scenario for performing the LNP query. The IXCs may decide to perform the LNP query at a different IXC switch or in conjunction with the 800 translation query.

Inbound 500 and 900 calls are not affected by our solution. Since the calling party's Automatic Number Identification (ANI) is not modified, the 500/900 called party/call center sees no difference between ported and non-ported subscribers.

Calls originating from 500, 800, and 900 call centers are not affected by our solution. These outbound calls are subject to an LNP query at the originating end office or at the first LNP-capable office the call encounters.

3.8.4. 911, E911

Our solution has no impacts on existing 911 service. Ported subscribers will continue to dial 911 to reach a Public Safety Services Answering Point (PSAP). The PSAP operator speaks with the subscriber to obtain calling number and location information. LNP does not change this interaction.

For Enhanced 911 (E911) service, the PSAP operator must receive the correct ANI for the calling subscriber in order to retrieve the correct information from the Automatic Location Identification (ALI) database. Our solution leaves the ANI unchanged; it is the subscriber's NPA-NXX-XXXX. As a result, E911 calls from ported subscribers will process normally.

Figure 3.8.4-1 depicts the call flow for an E911 call. Subscriber A on LSP2 EO1 dials 911 (1). Because LSP2 EO1 does not have direct connectivity to the ALI database, it routes the call to LSP1 tandem (2). LSP1 tandem identifies the 911 call and launches a query to the ALI database (3), which responds with the correct PSAP address for Subscriber A (4). LSP1 tandem routes the call to the correct PSAP. The PSAP receives the call with the correct location and calling number information displayed (6).

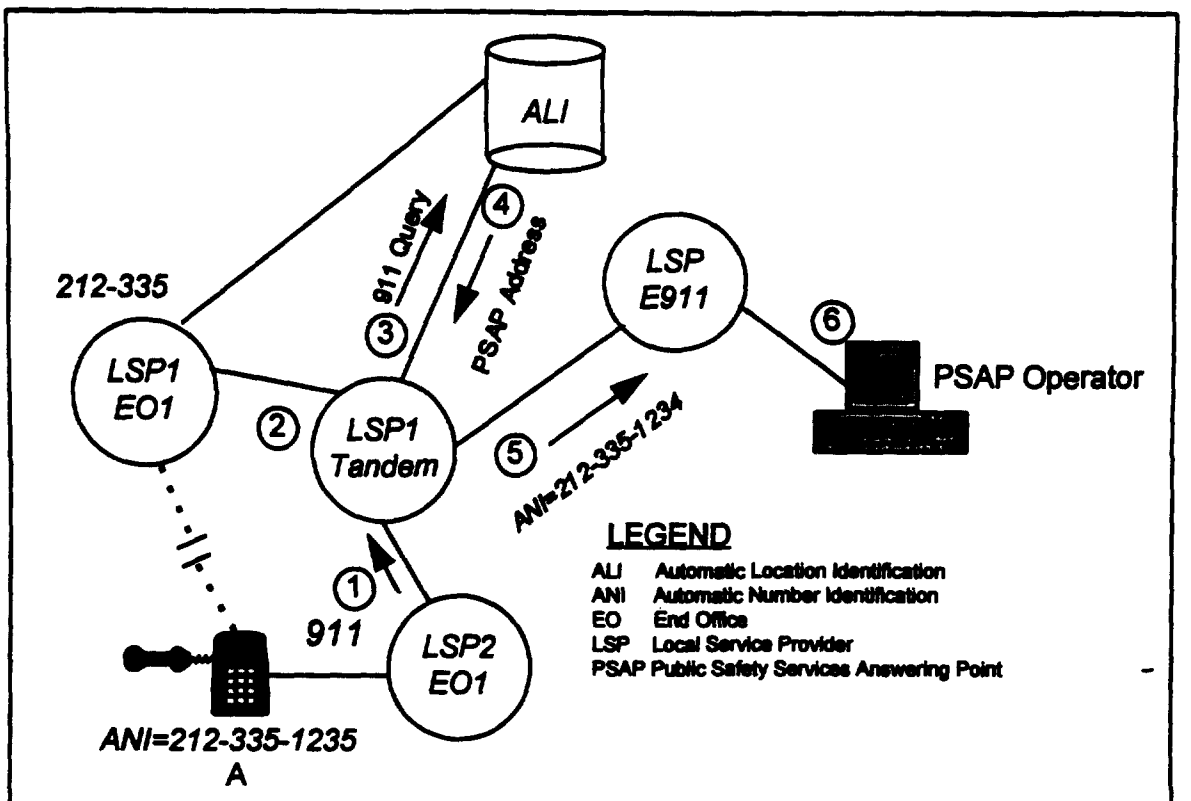

Figure 3.8.4-1. Flow for an E911 Call

In an area with multiple Local Service Providers, each LSP with a PSAP must provide access between this PSAP and the ALI database. Each LSP would be required to either serve its ported (and non-ported) subscribers using a PSAP based in its network, or make arrangements with another LSP to route E911 calls to their PSAPs. We will work with the participating Companies to address ALI access arrangements in more detail and to establish a plan for the trial.

3.8.5. Operator Services

Provider should provide an assessment of impacts on Busy Line Verification , 0+ Intra-LATA calling to ported numbers, and other operator interactions (including LIDB-supported functions).

During the trial, we expect that one LIDB will serve all ported and non-ported numbers. Since our LNP model uses the actual subscriber's number (NPA-NXX-XXXX), there is no impact on the LIDB supported functions. As a result of local competition in some areas, however, each Local Service Provider may have its own LIDB that contains only information for its subscribers. The existence of multiple LIDBs in a geographical area will require 10-digit Global Title Translation at the STPs to query the appropriate LIDB. LIDB access is required for such operator services as Collect Calls and Third Party Billing Number Screening.

As described in Paragraph 3.6, "0+" operator calls are routed to the operator center with the original dialed number intact. After the operator collects the appropriate information, the call extension leg is treated as a new call by the SSP, and may encounter an LNP query based on the Called Party Number. These services are not affected by our solution.

We anticipate a trial configuration that has all Local Service Providers served by one operator center, which will have direct or indirect connectivity to the LSP switches. The operator center must support LNP translation, which can be accomplished by querying the LNP SCP or by keeping a local copy of the LNP database. The lack of clear Busy Line Verification (BLV) signaling standards makes it very difficult to devise a solution for the switches to perform the LNP query. Still, we may evaluate other alternatives as part of the pre-trial activities, with other carriers' participation.

[This space intentionally left blank.]

Figure 3.8.5-1 illustrates a BLV call scenario with the operator center performing an LNP query. Subscriber A dials "0" to gain access to the local Operator (1). The Local Service Provider delivers the call to the operator center (2), where an operator receives a request from Subscriber A to perform a BLV on Subscriber B, who is served by LSP2 (3). The operator system must recognize that Subscriber B is in a portable NPA-NXX so that it can perform a LNP database query (4). The LNP database returns the CPC-NXX-XXXX for Subscriber B (5). The operator initiates a BLV request for Subscriber B on LSP2 (6).

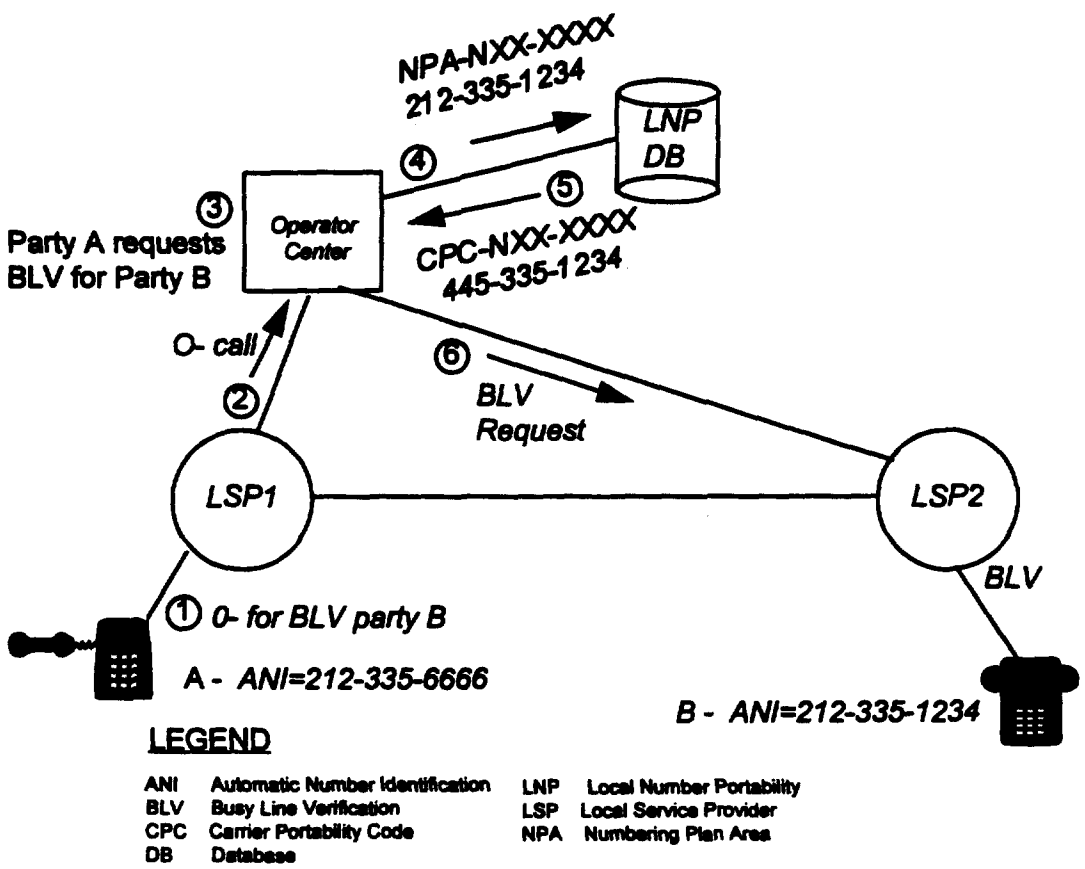

Figure 3.8.5-1. Flow for Operator Services-Busy Line Verification Call

3.8.6. Non-Participants' Calls

Calls to ported numbers that originate from and route exclusively through non-participating carriers must also be handled properly. In the figure below, a call originates from an non-participating Local Service Provider (LSP3).

Calls to ported numbers may originate from non-participating carriers, but cannot "route exclusively through" non-participating carriers. For the number to be ported, it must belong to a subscriber served by a participating carrier; therefore, the call must route to a participating carrier.

Figure 3.8.6-1 shows an Intra-LATA call to a ported number. The call originates from or routes through a non-participating carrier; in this case, a non-participating Local Service Provider (LSP3). This Local Service Provider is not capable of performing a database query, so the call is routed normally until it reaches an LNP-capable service provider (LSP1), such as New York Telephone or Rochester Telephone. LSP1 performs the query and terminates the call to the correct Local Service Provider (LSP2).

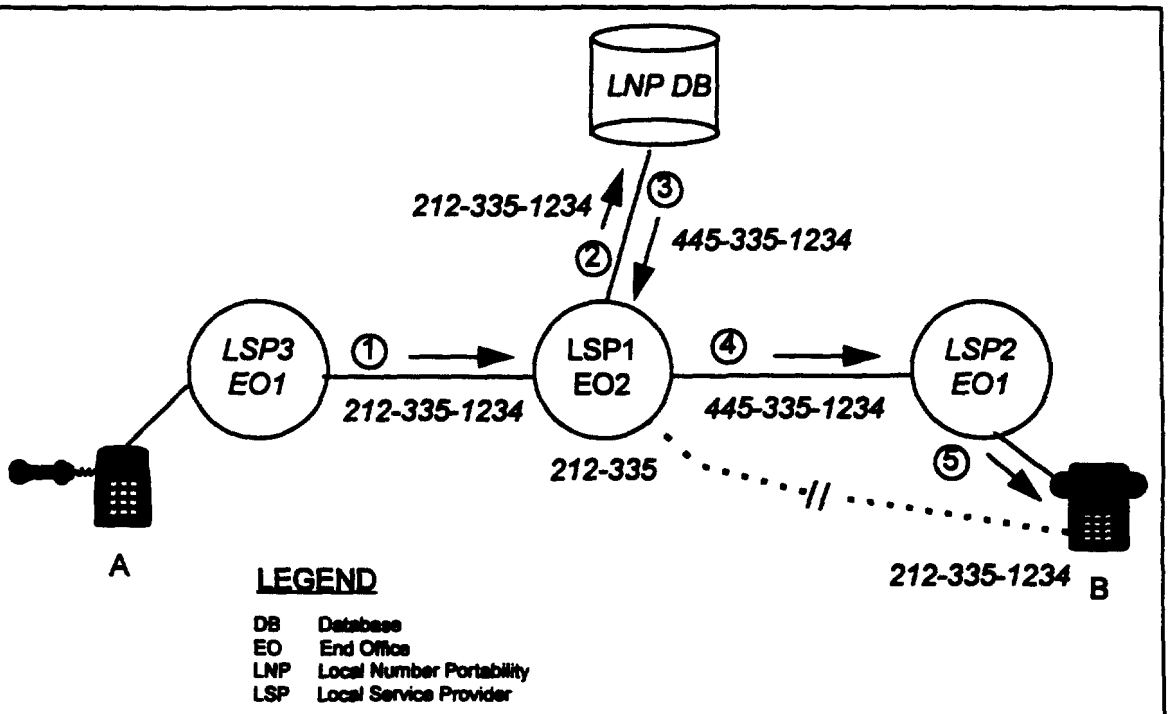

Figure 3.8.6-1. Flow for Intra-LATA Non-Participants' Calls

3.8.6.1. A dials 335-1234

Subscriber A on the non-participating LSP3 EO1 dials 335-1234 to reach Subscriber B.

3.8.6.2. A's LSP3 EO1 routes the call to the LSP 1 EO2 as the normal destination for the 335 NXX.

LSP3 EO1 routes the call to LSP1 EO2, which is the normal destination for the 335 NXX (1).

3.8.6.3. The LSP1 EO2 recognizes that 335-1234 has been ported and therefore queries the LNP database. Note that the query uses the full 10-digit number although originally only 7 digits were dialed.

LSP1 EO2 recognizes that 212-335 is a portable NPA-NXX, and that 335-1234 does not reside within its switch; therefore, LSP1 EO2 queries the LNP database (2).

3.8.6.4. The LNP database responds with the information necessary for LSP1 EO2 to route the call to its correct destination, LSP2 EO1. (In this case direct trunking from the LSP1 EO2 to the LSP2 EO1 was used, but in other cases routing might be via a hub or tandem.)

The LNP database responds with the correct CPC-NXX-XXXX for the subscriber (3). This allows LSP1 EO2 to route the call to the correct LSP, LSP2 EO1 (4). In this case, there was a direct trunk group from LSP1 EO2 to LSP2 EO1. If there were no direct trunk group, routing could be done through a tandem or a hub.

3.8.6.5. The LSP2 EO terminates the call to party B

LSP2 EO1 terminates the call to Subscriber B (5).

3.8.6.6. The non-participating IXC case is similar, except that the IXC rather than a Local Service Provider (LSP3) would hand off the call to LSP1. Note that if the IXC did not terminate the call directly to the LSP1 EO where the 212-335 exchange normally resides but rather to a tandem, the LNP query might be performed either at the tandem or at the LSP1 E0 2 as shown depending on the details of the Provider's proposal.

Figure 3.8.6.6-1 shows an Inter-LATA call to a ported number that routes through a non-participating interexchange carrier, IXC1. This interexchange carrier is not capable of performing a database query, so when the call reaches a capable service provider (LSP1), such as New York Telephone or Rochester Telephone, this Local Service Provider performs the query and terminates the Inter-LATA call to the correct Local Service Provider, LSP2.

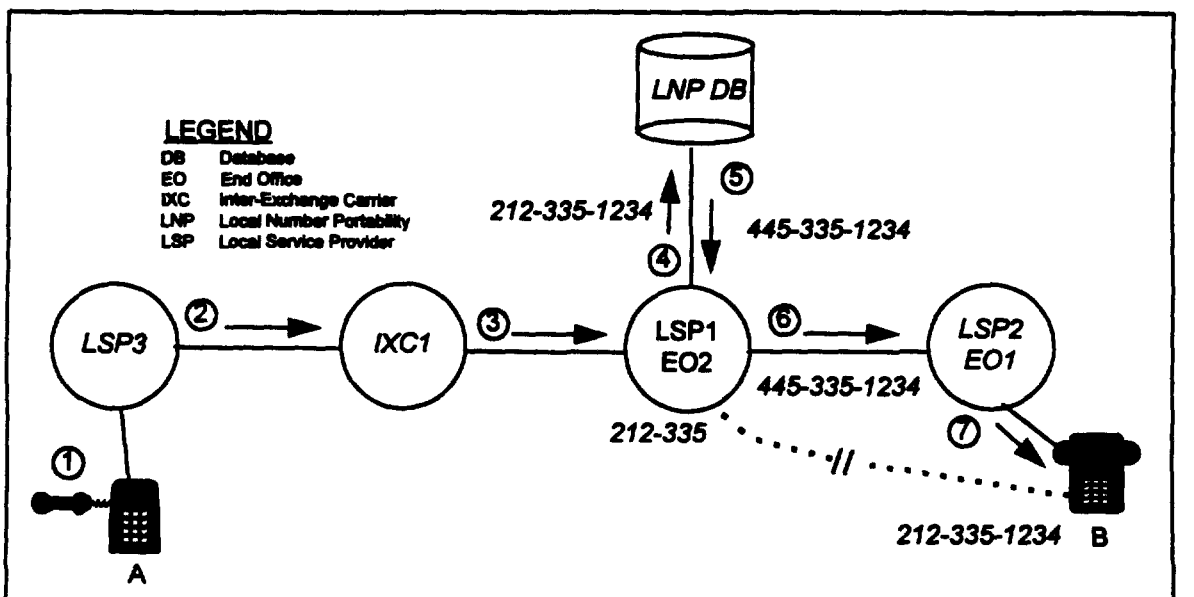

Figure 3.8.6.6-1. Flow for Inter-LATA Non-Participants' Calls

Subscriber A dials 212-335-1234 to reach Subscriber B (1). LSP3 translates the "1+" call and routes the call directly to Subscriber A's presubscribed IXC1 (2), which routes the call to LSP1 EO2, the normal destination for the 335 NXX (3). LSP1 EO2 recognizes that 212-335 is a portable NPA-NXX, and that 335-1234 does not reside within its switch. It therefore queries the LNP database (4), which responds with the correct CPC-NXX-XXXX for the subscriber (5). This enables LSP1 EO2 to route the call to the correct LSP, LSP2 EO1 (6), which terminates the call to Subscriber B (7).

Alternatively, the IXC could hand the call off to a tandem, which would query the LNP database and route the call as explained above.

3.8.7. Cellular Calls

The figure below shows the call flow for a participating cellular carrier that elects to perform its own query of the LNP database.

Figure 3.8.7-1 depicts call flow through a cellular carrier that performs its own LNP database queries. If the cellular carrier chooses not to perform database queries and terminates the call normally, the terminating EO or access tandem performs the LNP query as shown in the preceding scenarios for non-cellular calls. During the pre-trial period, we will work to attract the participation of local cellular carriers and then coordinate with them to determine configuration requirements.

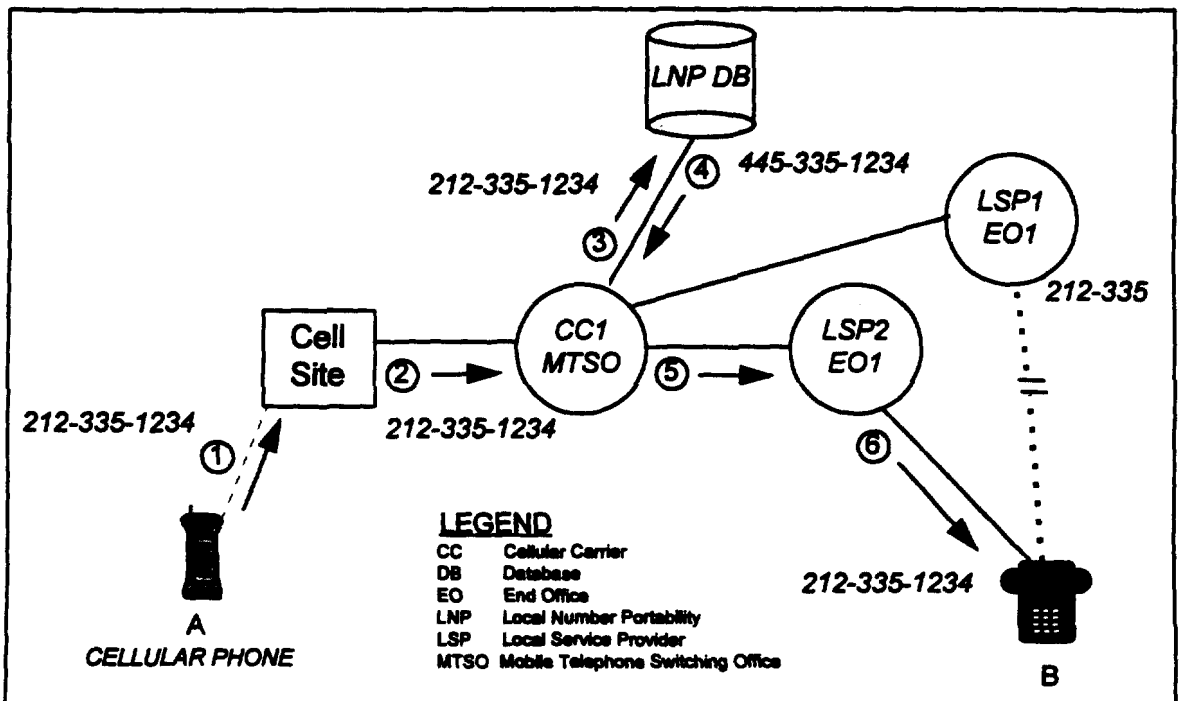

Figure 3.8.7-1. Flow for Cellular Call

3.8.7.1. The cellular caller dials 335-1234

A cellular caller, Subscriber A, dials 335-1234 (1). This call routes from the cell site to Cellular Carrier 1 Mobile Telephone Switching Office (MTSO) (2).

3.8.7.2. The Cellular Carrier 1 MTSO recognizes the 335 exchange as one opened to portability and so queries the LNP database. (Again, the query uses the full 10-digit number.)

Cellular Carrier 1 MTSO recognizes that 212-335 is a portable NPA-NXX, and queries the LNP database (3).

3.8.7.3. Based on the response from the LNP database the MTSO routes the call to LSP2 EO1, in this case directly.

The LNP database responds to the query from Cellular Carrier 1 MTSO with the CPC-NXX-XXXX (445-335-1234) for Subscriber B (4). Cellular Carrier 1 MTSO then routes the call to the correct LSP, LSP2 EO1, using the CPC (5). In this case, the route was a direct trunk; in other cases, multiple hubs and tandems may be involved.

3.8.7.4. LSP2 EO 1 terminates the call to party B

LSP2 EO1 terminates the call to Subscriber B (6).

[This space intentionally left blank.]

3.8.8. Inter-switch Call to a Non-Ported Number.

[Not a numbered RFP paragraph. Proposed additional call flow provided in response to RFP Section 3.8]

Figure 3.8.8-1 illustrates an additional call flow to help explain call-flow processing in our LNP solution. This is a local inter-switch call to a number that has not been ported, but is in an NPA-NXX that is considered portable.

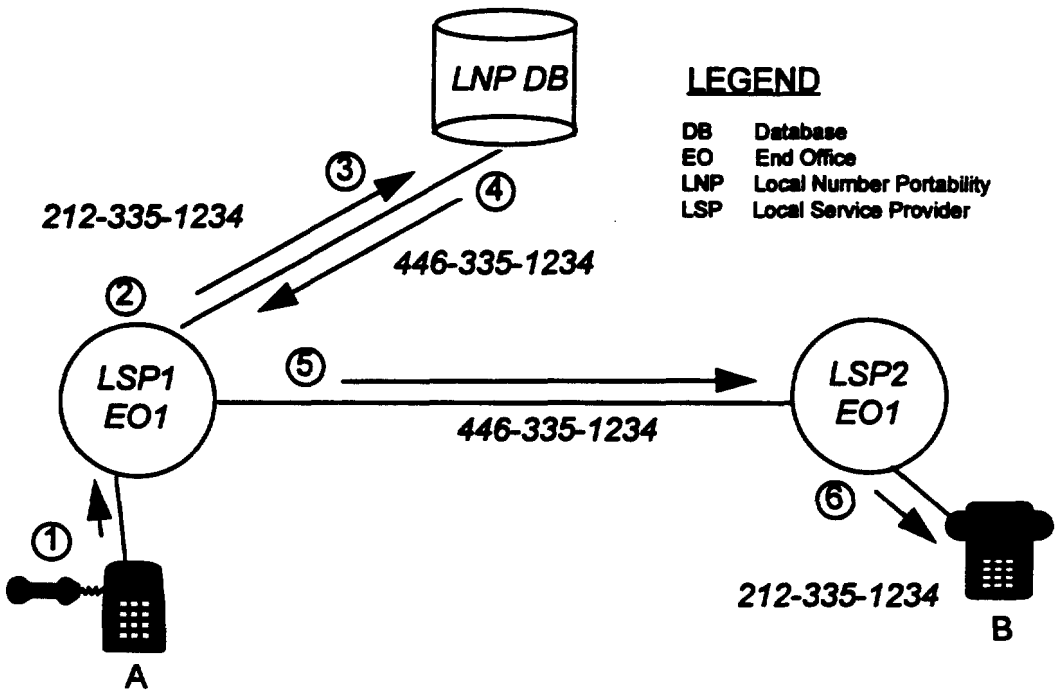

Figure 3.8.8-1. Flow for a Call to an Unported DN in a Ported NPA-NXX

Subscriber A dials the number for Subscriber B, 335-1234 (1). LSP1 EO1 performs digit analysis and, based on the dialed number, recognizes a local call to a portable NPA-NXX (2). It also determines that the dialed number does not reside in its own switch, and launches a query to the LNP database (3). The LNP database performs a query on the dialed NPA-NXX-XXXX and determines that the DN is not ported and not vacant. It responds to LSP1 EO1 with the CPC-NXX-XXXX for the Local Service Provider to which the NPA-NXX was originally assigned in LERG, LSP2 EO1 (4). Based on the CPC-NXX response it receives from the LNP SCP, LSP1 EO1 routes the call to LSP2 EO1 (5). LSP2 EO1 terminates the call to Subscriber B (6).

3.9. Trial Exit Plan

The trial is expected to last for approximately six months. The Provider shall assist the participating carriers in documenting the results of the trial. The trialed numbers will be ported back on their old switching offices provided by the previous (pre-trial) Local Service Provider. The Provider and participating carriers will perform exit testing to ensure that the trialed lines and features have been restored to their pre-trial configuration.

All database information provided by each participant is proprietary and must be returned at the conclusion of the trial.

During the trial, we will work with the other participants to develop detailed procedures to return the ported subscribers to their pre-trial state. These procedures will include sufficient testing to verify that the trialed lines and features have been restored to their pre-trial configuration.

We agree to use the database information provided by each participant only as necessary to conduct the trial. All database information will be returned to the respective participant at the close of the trial.

We will carefully plan and coordinate the trial exit to ensure that the exit proceeds smoothly and to everyone's satisfaction. APPENDIX D, specifically Table D.1-1 at task items number 46.2, 55.2, 64.2, and 67, lists milestones relating to trial exit.

3.10. Technical Specifications and Engineering

The technical specifications proposed herein serve as a possible baseline and should not be construed as the only requirement for the Provider's solution; the Provider's solution may exceed the requirements.

Our solution is expected to meet or exceed the requirements of RFP Paragraphs 3.10 through 3.10.3, except as noted in Paragraph 3.10.3.1.2.

3.10.1 SS7 Interface

Standard SS7 interfaces are required, to the extent new signaling links are required to effect SCP interconnection. All SS7 circuits will operate at 56 Kbps and comply with the following specifications:

Our Tandem LNP SCP provides for standard 56 Kbps SS7 signaling link interfaces that comply with the Bellcore and ANSI standards. In addition to the Bellcore AIN 0.1 call model, the LNP SCP supports the International Telecommunications Union (ITU) and ETSI requirements for SS7 White Book and associated TCAP messages for Capability Set 1 (CS-1) call model triggers.

After award, we will provide a detailed compliance matrix if requested.

3.10.1.1. Bellcore TR-NWT-000246 Issue 2 (PHY, MTP, SCCP, & TCAP).

The LNP SCP has a high degree of compliance with Bellcore TR-NWT-000246 Issue 2 (PHY, MTP, SCCP, & TCAP). Based on our experience with our LNP prototype, we anticipate no complications.

Our STPs comply fully with TR-NWT-000246, Sections T1.111, T1.112, T1.113, and have a high degree of compliance to Section T1.114.

3.10.1.2. ANSI T 1.111 (PHY & MTP).

The LNP SCP and MCI STPs have a high degree of compliance with ANSI T1.111 (PHY & MTP). Based on our laboratory LNP prototype experience, we anticipate no complications.

3.10.1.3. ANSI T1.112 (SCCP). Exceptions: neither ISNI nor XUDT/S will be supported for the trial.

The LNP SCP and MCI STPs have a high degree of compliance with ANSI T1.112 (SCCP). Based our LNP prototype experience, we anticipate no complications.

3.10.1.4. ANSI T1. 113 (ISUP)

The LNP SCP and MCI STPs have a high degree of compliance with ANSI T1.113 (ISUP). Based on our LNP prototype experience, we anticipate no complications.

3.10.1.5. ANSI T1.114 (TCAP).

The LNP SCP and MCI STPs have a high degree of compliance with ANSI T1.114 (TCAP). Based on our LNP prototype experience, we anticipate no complications.

3.10.2 SCP-SSP Interface

The SCP-SSP interface via SS7/TCAP will meet or exceed the following specifications:

In addition to exceeding the "SCP-SSP interface via SS7/TCAP" requirements specified by Bellcore TR-NWT-001285, the LNP SCP also complies with International Telecommunications Union (ITU) standards and with ETSI Core INAP SS7/TCAP specifications for the Capability Set call model.

3.10.2.1 Bellcore TR-NWT-001285, AIN 0.1 Switch-SCP Application Protocol Interface Generic Requirements.

The LNP SCP provides a high degree of compliance with Bellcore TR-NWT-001285, AIN 0.1 Switch-SCP Application Protocol Interface Generic Requirements. Based on experience with our LNP prototype, we anticipate no complications.

3.10.3 Performance

SCP performance will meet or exceed the following specifications:

Individual Paragraphs define the LNP SCP compliance with the RFP specifications.

3.10.3.1 Bellcore GR-1280-CORE, AIN SCP Generic Requirements, Section 11. Specifically, requirement GR-1280-CORE 11-4 states:

The LNP SCP supports sustained high-volume traffic levels within acceptable response limits based on service criteria. The LNP SCP design uses message-bundling techniques for efficient delivery of messages from the SS7 interface to the call-processing units (CPUs). The characteristic of message-bundling is that the harder the system is driven, the more efficient it becomes at handling increased transaction volumes. Message bundling adds some overhead to the process, making it somewhat less efficient for low traffic volumes. Nonetheless, the system provides increased efficiency for high traffic volumes and is the optimal approach for broad-scale implementation.

The comparative efficiencies of bundling at low and high volumes can best be illustrated by example:

- at the ultimate low volume, a single message, the volume of system overhead (routing, error correction, headers, footers, etc.) could be as great as the volume of data in the message, creating a very inefficient one-to-one data-to message ratio.

- if ten or a hundred messages are bundled, the amount of system overhead is no greater than for a single message, greatly increasing system efficiency. Even when the comparatively small overhead added for bundling at the sending end and unbundling at the receiving end is added to the system overhead, the ratio is superior to that of the same data sent as individual messages. In a bundled system, as message volume increases, the number of messages per bundle also increases, further improving system efficiency as measured by the data-to-overhead ratio.

The increased efficiency with high traffic volume creates a slight penalty with respect to GR-1280-CORE, in that the low end of the response time does not meet the 100ms mean and 120ms 95% response time conditional requirement defined in section 11-4 of the GR-

1280-CORE. Figure 3.10.3.1-1 is a graph depicting the mean response time with respect to the transactions per second per CPU. It is obvious from the graph that the growth of traffic, up to the CPU saturation point, does not affect the response time negatively. After reaching the CPU saturation point, Tandem adds CPUs to maintain the system's linear response time.

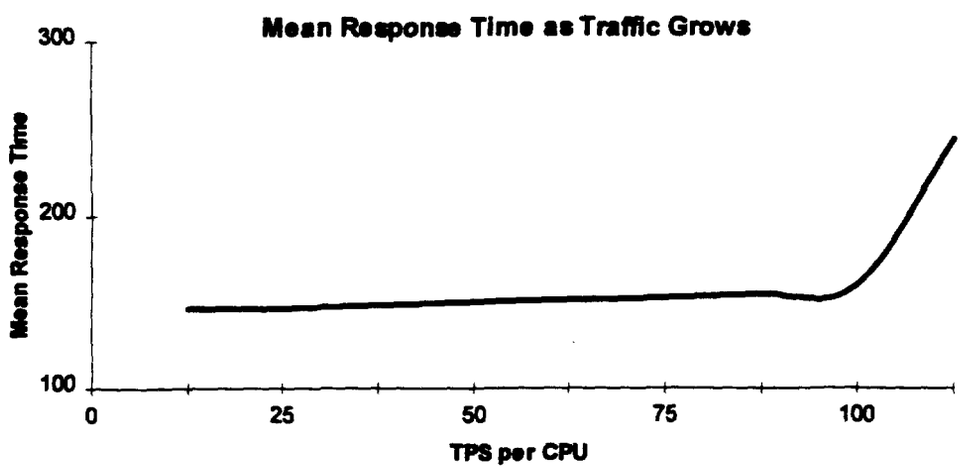

Figure 3.10.3.1-1 SCP CPU Performance

The following paragraphs describe the LNP SCP performance specifications based on benchmark performance data using a transaction similar to the GR-1280-CORE Type A. A transaction is defined as one query and the corresponding response message. The response time is defined as the time between receipt of the first bit of the query message and transmission of the last bit of the response message. These response time measurements were made at the traffic load box and not at the inbound-to-outbound buffers of the LNP SCP.

3.10.3.1.1 Mean response times at rated transaction load of 100ms or less.

The mean response time for the transaction load must be measured at sustainable levels to be a meaningful measurement of system performance. The LNP SCP, for example, can support a sustained traffic load of more than 1200 transactions per second TPS at less than 75% CPU load. The LNP SCP achieves a mean response time of 139 milliseconds at 40 TPS with one CPU, and 171 milliseconds at 1288 Transactions Per Second (TPS) with up to twelve CPUs. Minimum response time is 100 milliseconds throughout this load range.

3.10.3.1.2 95% response times at rated transaction load of 120ms or less.

The LNP SCP achieves a 95% response time ranges from 156ms at 40 TPS to 219ms at 1288 TPS.

3.10.3.2. Bellcore GR-1280-CORE, AIN SCP Generic Requirements, Section 13.

The LNP SCP provides 24 hour-per-day, 7 day-per-week service availability to the network in a mated configuration. The unit's key reliability attributes include the following:

- redundant hardware and software throughout the system; no single point of failure
- a call-processor complex of independently operating CPUs
- individual copies of the operating system software, node software, and application software sited at each CPU
- capability to replicate applications across multiple nodes, as well as within a single node
- graceful node shutdown for planned outage
- low failure rates.

We intend to maintain compliance with the reliability requirements and objectives outlined in the Bellcore AIN 0.1 technical requirements documents. We have already obtained ISO 9001 certification that can be correlated with the Bellcore requirements for system design and architecture, manufacturing and production, and in-service performance and product support.

3.11. Reliability, Availability, and Serviceability

Please see Section 4 of this RFP for more details on maintenance and technical support.

Our responses to RFP Paragraphs 3.11 through 3.11.3.2 are consistent with our responses to Section 4 of the RFP.

One reason we chose Tandem Computer as the SCP vendor was that company's proven record in providing one of the industry's highest levels of reliability, availability, and serviceability. The Tandem SCP is currently deployed in telephone networks at 187 locations worldwide, including 78 in the United States. The SCPs are currently running various Call Processing applications, supporting tens of millions of subscribers daily. The tandem LNP SCP differs from the Tandem SCP only in terms of a limited amount of LNP-specific application software.

Confirming Tandem's reliability is a statement from one of the Regional Bell Operating Companies:

> "Running 24 hours a day, 7 days a week, the Tandem network has delivered 100 percent availability since 1986. Except for a power failure, we have never had any interruptions caused by downtime, never had system falter because of a component malfunction. Our users think that kind of reliability is normal. They don't realize it is unique."

Tandem is also the only vendor in the world to earn certification to the ITSEC F-AV/E3 Availability Standards. This internationally recognized standard is the German Information Security Agency's highest possible availability-level certification.

3.11.1. Maintenance

Provider's solutions must support Hot Swap, On-line upgrades, On-line Dynamic Reconfiguration, and must be scaleable without service interruption.

Because our LNP SCP was designed to accomplish mission-critical applications, it conforms totally to the maintenance philosophy and requirements that are needed for network deployment. Most components, including CPUs and microprocessor modules, input/output (I/O) controllers, storage devices, power supplies, discs, links, and even fans, are Hot Swapable; that is, they can be installed and serviced on-line without disrupting the normal operation of the server.

Hardware alone cannot achieve maximum maintenance flexibility. The SCP's NonStop Kernel operating system and SCP node software combine with the hardware to deliver the most flexible maintenance solution available, including the following capabilities:

- integrated support for automatic monitoring and diagnosis of processors, I/O controllers, I/O devices, power subsystems, and cabinet environments
- built-in provision for Remote Maintenance Interface, which automatically dials a remote support center of the customer's choice
- a Remote Maintenance Interface that can report any problems or potential problems via either a terminal or voice interface, and can initiate diagnostics and take corrective actions without disrupting call processing,
- built-in instrumentation to provide comprehensive on-line configuration and system management
- a Dynamic System Configuration capability that allows the system configuration to be modified on-line without service impact

- a Distributed System Management capability that provides the foundation for such network management applications as NonStop Netmaster, an industry-standard, network-management application that is compatible with IBM's Netview

- provision for system and network management via Simple Network Management Protocol (SNMP) or Open System Interconnect (OSI) Centralized Maintenance Information Process (CMIP)/Centralized Maintenance Information System (CMIS)

- unmatched system on-line scalability

- dynamic, on-line upgrading or reconfiguration of applications, services, databases/records, links, and CPUs.

The SCP includes an Operations, Administration, and Maintenance (OA&M) workstation that provides the primary interface between these SCP functions and the host system. Using the OA&M workstation, the user can control, view, and execute node functions, including the following:

- initiate system applications

- modify system Node Specification and Application Specification database information

- view on-line system-performance information

- view host-system errors

- perform alarm-management functions

- perform maintenance functions for the SCP Communications System

- perform network surveillance.

Benefits of the Tandem OA&M Workstation include the following:

- a single-point control of the system/network

- a continuously visible alarm-panel display that monitors system/network and applications integrity

- expanded system connectivity

- immediate access to the local craft workstation event-log file.