MCI Communications Corporation
1801 Pennsylvania Ave NW
Washington, DC 20006
202 887 2048

Leonard S. Sawicki
Senior Manager
Regulatory Affairs

EX PARTE OR LATE FILED

EX PARTE

RECEIVED
AUG 2 1995
FEDERAL COMMUNICATIONS COMMISSION
OFFICE OF SECRETARY

August 2, 1995

Mr. William F. Caton
Secretary
Federal Communications Commission
Room 222
1919 M Street NW
Washington, D.C. 20554

Re: CC Docket 95-116; Telephone Number Portability

Dear Mr. Caton:

Yesterday, Woody Traylor, and I met with Jerry Cornfeld, Nina Sandman, Deborah Klein, Jerry Duvall, James Olson, Heather Haggerty, Robert Rubinovitz, George Ford and Jim Schwartz of the Competition Division of the Office of General Counsel. The purpose of the meeting was to review MCI's position on local number portability and describe the Carrier Portability Code Model for number portability. The attached document was used as the basis of MCI's presentation.

Two other documents, a Gallup survey on local competition issues and MCI's response to the New York PSC's Request for Proposals for a local number portability trial, were also distributed in the meeting. These documents have already been placed in the record of this proceeding.

Sincerely,

Leonard S. Sawicki

Leonard S. Sawicki

Attachment

cc: Mr. Cornfeld
Mr. Duvall
Mr. Ford
Ms. Haggerty
Ms. Klein
Mr. Olson
Mr. Rubinovitz
Ms. Sandman
Mr. Schwartz

No. of Copies rec'd 0+1
List A B C D E

Local Number Portability Review

Carrier Portability Code Model

Woody Traylor
Executive Staff Member

Agenda

Local Number Portability Review

- What is LNP?
- Interim LNP Measures
- True LNP Vision
- MCImetro Initiatives
- Carrier Portability Code Model
- Current Status

What is LNP?

- *LNP Has Three Common Variations*
  - *Provider Portability - The ability of a customer to change their local service provider and keep the same directory number.*
  - *Location Portability - The ability of a customer to change their physical address and keep the same directory number.*
  - *Service Portability - The ability of a customer to change services and keep the same directory number.*
- *Provider Portability is the Most Essential to Resolve Quickly; Assuming no Mobility*

Interim LNP Measures

- Two Predominant Proposals
  - Remote Call Forwarding
  - Flexible DID
- Both are Deficient
  - Loss of Features
  - Calls Continue to Process Through Incumbent LEC
  - Additional Administration Overhead
  - Trouble Shooting Likely More Difficult

Remote Call Forwarding Direct Connection

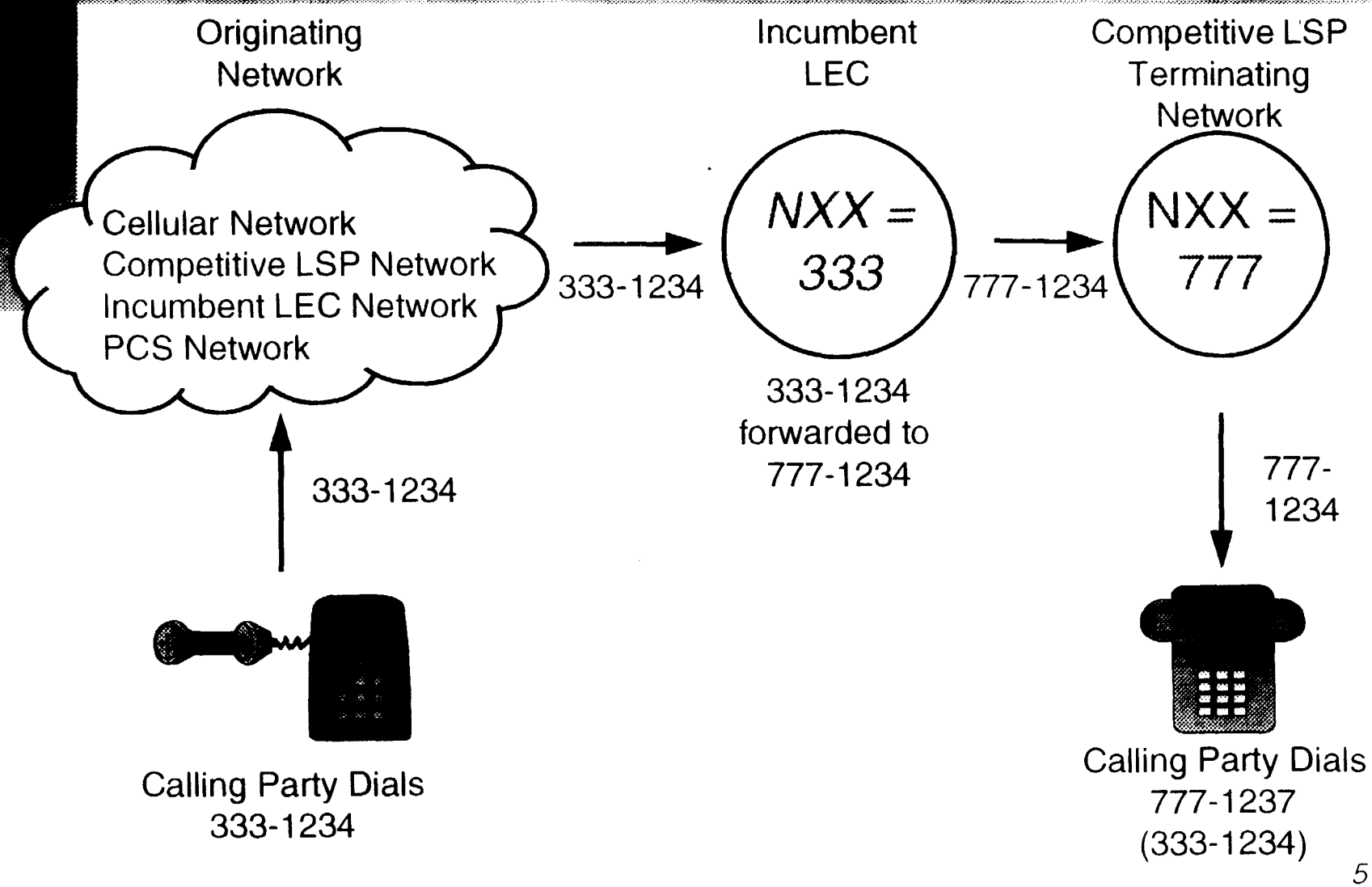

Remote Call Forwarding Tandem Connection

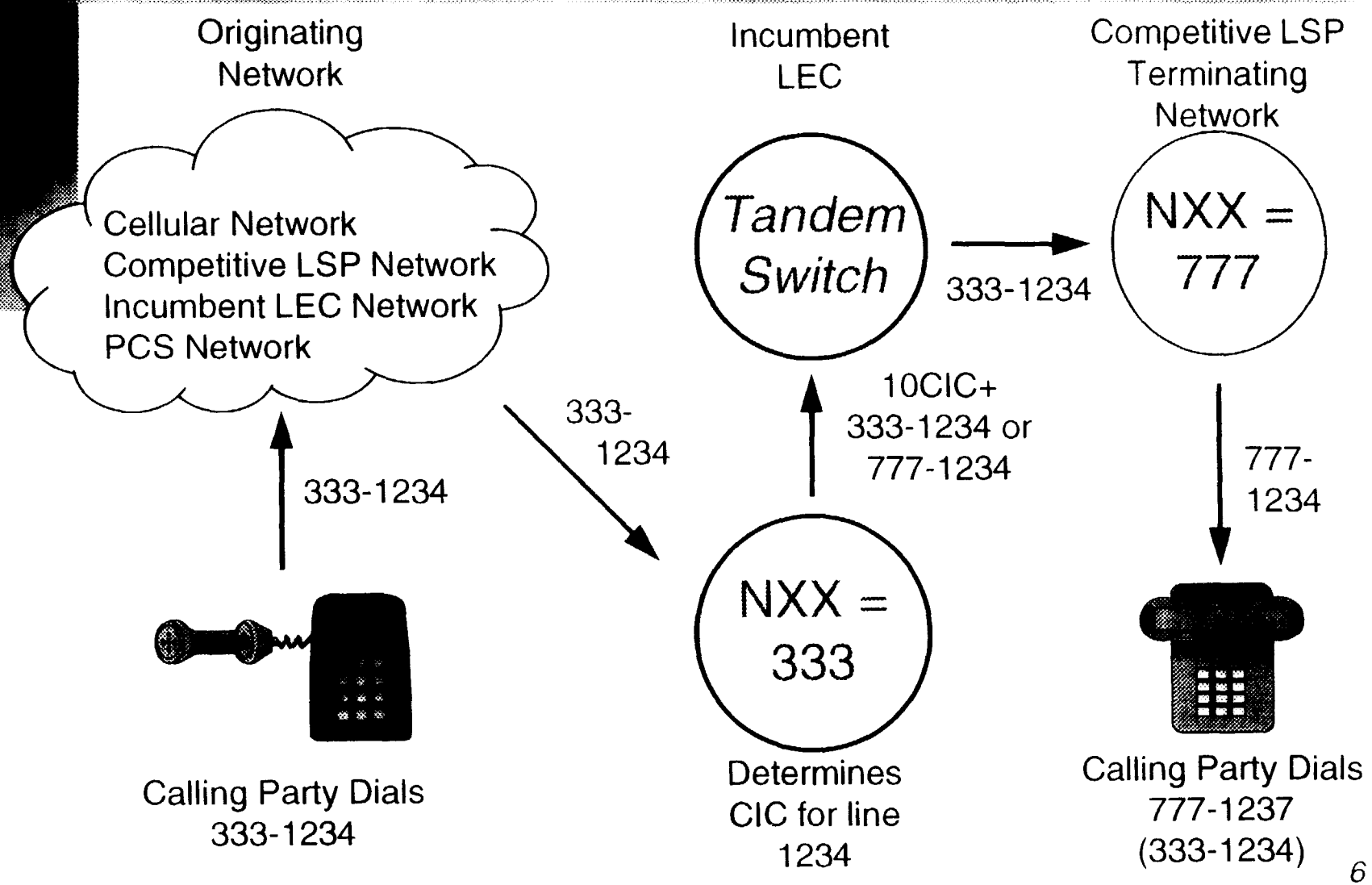

DID
Direct Connection

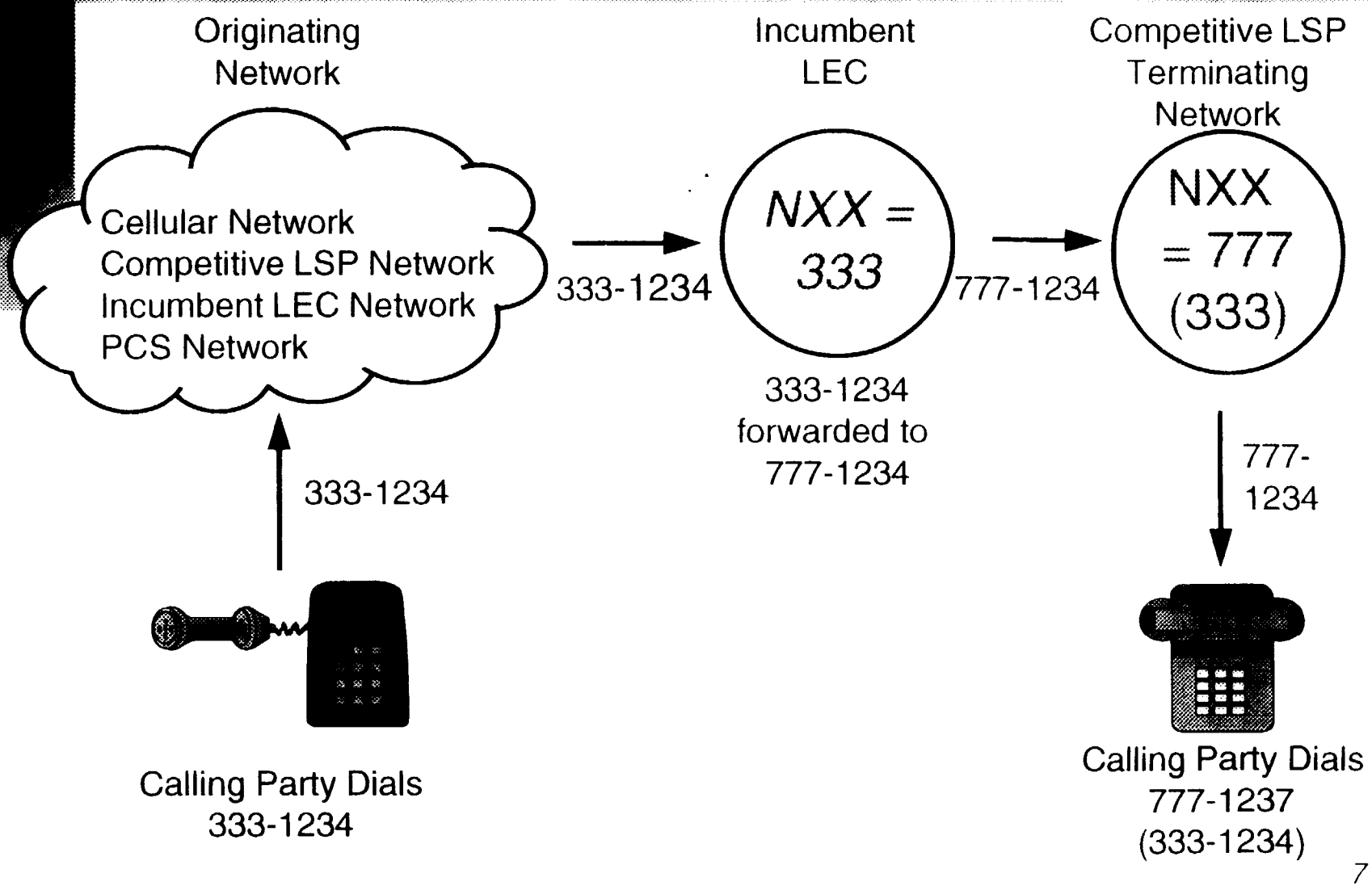

DID
Tandem Connection

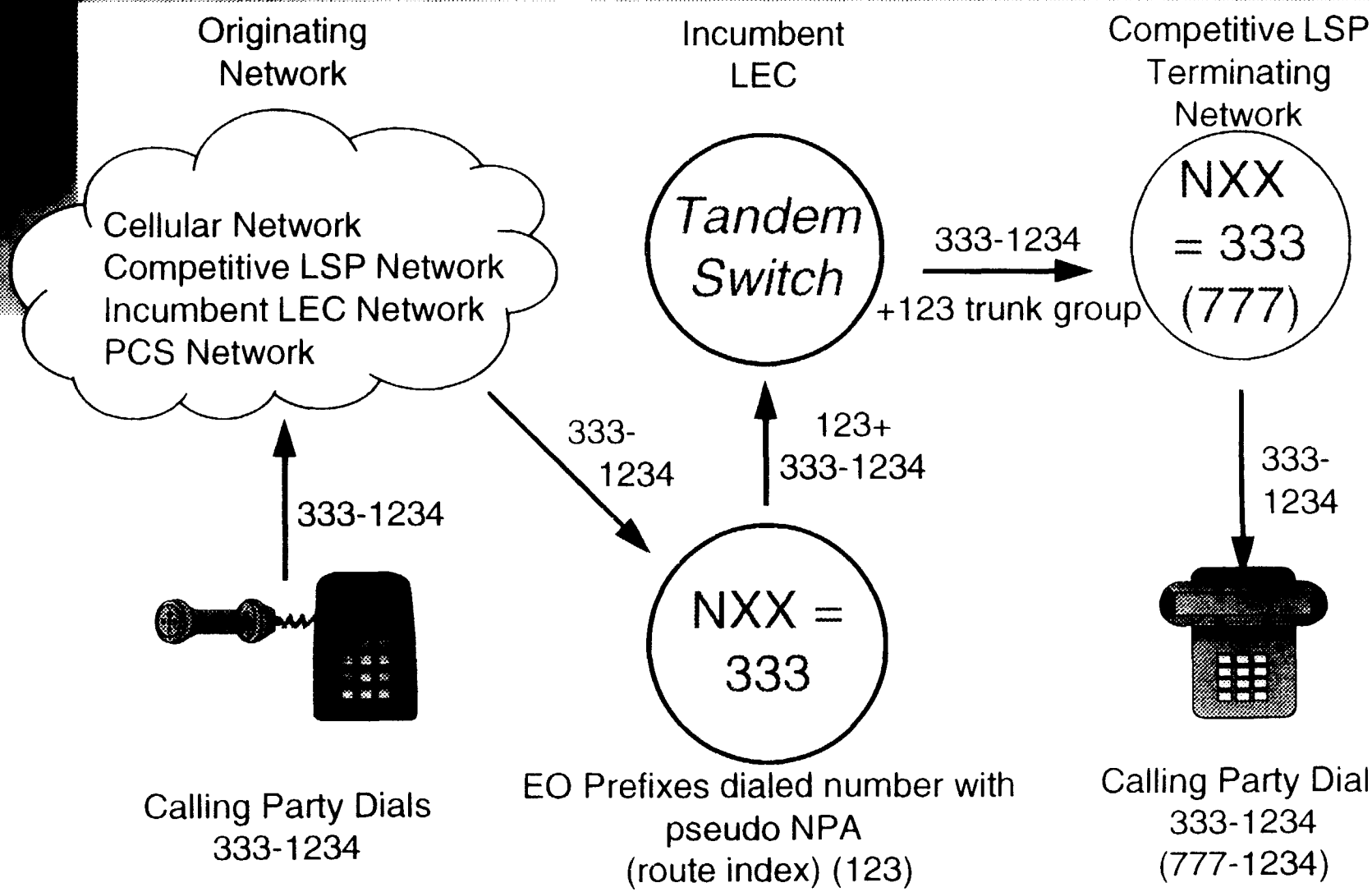

Table 1

Scenarios/ Deficiencies	Remote Call	RCF Tande	DID Trunki	DID Tande
1. Call Blocking	X	X	X	X
2. Call Transmission	X	X	X	X
3. CLASS Services Broken	X	X	X	X
4. 32 Sumultaneous Calls	X	X		
5. NPA Exhaust	X	X		
6. Call Setup	X	X	X	X
7. Switch Processing	X	X	X	X
8. 911 Impacts	X	X		
9. Customer Compaint	X	X	X	X
10. Trunking Requirements	X		X	X
11. IXC Billing	X	X	X	X
12. Operator Services Impacts	X	X	X	X
13. Subscriber Confusion	X	X		
14. AMA Impacts	X	X	X	X

Local Call Flow

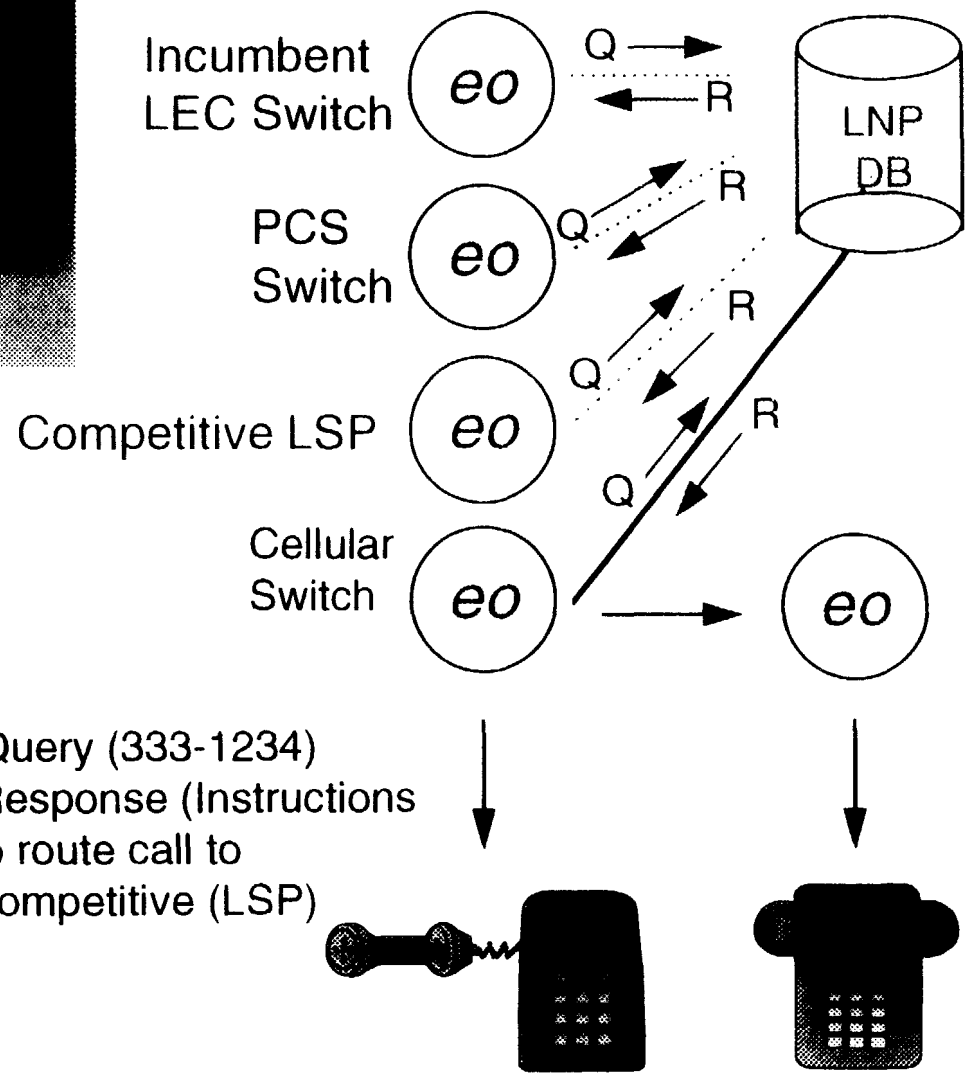

Q: Query (333-1234)
R: Response (Instructions to route call to Competitive (LSP)

Call Flow:

1. Originating network determines call is local
2. Originating network queries Number Portability Database with dialed number information
3. Number Portability Database responds with routing instructions
4. Originating network routes call to appropriate terminating Competitive Local Exchange Service Provider (LSP)
5. Terminating Carrier (e.g. Competitive LSP) delivers call to called party

InterLATA Call Flow

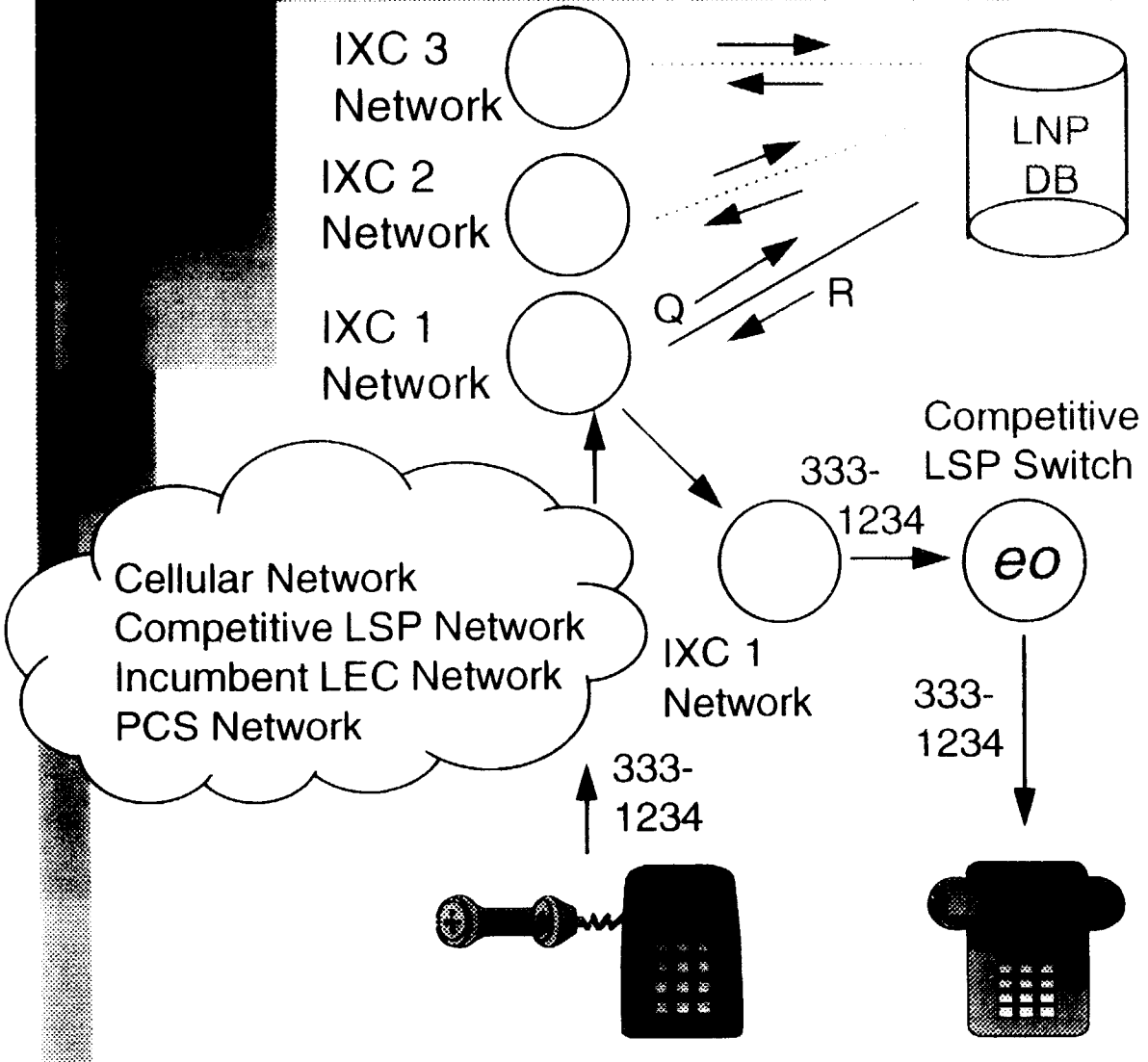

Call Flow:

1. Originating network hands call to IXC network based on presubscription
2. IXC network queries Number Portability Database with dialed number information from whatever node in its network is most efficient (in this example, from its switch at the originaing point in its network is most efficient)
3. Number Portability Database responds with routing instructions
4. IXC routes call to appropriate terminating Carrier
5. Terminating Carrier (e.g. Competitive LSP) delivers call to called party

Moving Beyond Interim Measures...

- *Must Demonstrate Long Term Database Solution is:*
  - *Economically Feasible*
  - *Technically Possible*
  - *Viable Near Term*

MCImetro Initiatives

Multi-Vendor Task Group:

- *Established October 1994*
- *Participants: MCIT, MCImetro, DSC, NORTEL, TANDEM, Siemens*
- *Mission: Design and Prototype a Solution; Demonstrate by April 1995*
- *Further Develop Solution to be Deployable in Trial by 4Q95*

Carrier Portability Code (CPC) Model

Description:

- Terminating Solution Using N-1 Architecture
- Substitutes 3 digit Carrier Portability Code (CPC) for NPA
- CPC Plus Original 7 Digit Number Used for Routing Call
- CPC Assigned for Each Service Provider per Geographic Area (NPA or LATA)

CPC Model - Advantages

- Both MF Signaling and SS7 Signaling Implementations Supported
- Implementation via AIN (using a PODP 3/6/10 trigger) or IN (using a TR-533 triggering mechanism)
- Allows Rollout on NXX by NXX Basis
- Solution Works with Both Local and Long Distance Calling (and Switches)
- Minimal Impact to Current Technologies

Carrier Portability Code Model

- Example Call Types
  - Local - Pre-Move
  - Local - Post-Move
  - Inter LATA Post-Move
  - CLASS - Automatic Callback Test

Local - Pre-Move

Test Case 1

* No database DIPS required for Pre-Move with IN

Calling Number = 703-720-1234
Called Number = 703-281-1111

Call Completed Normally

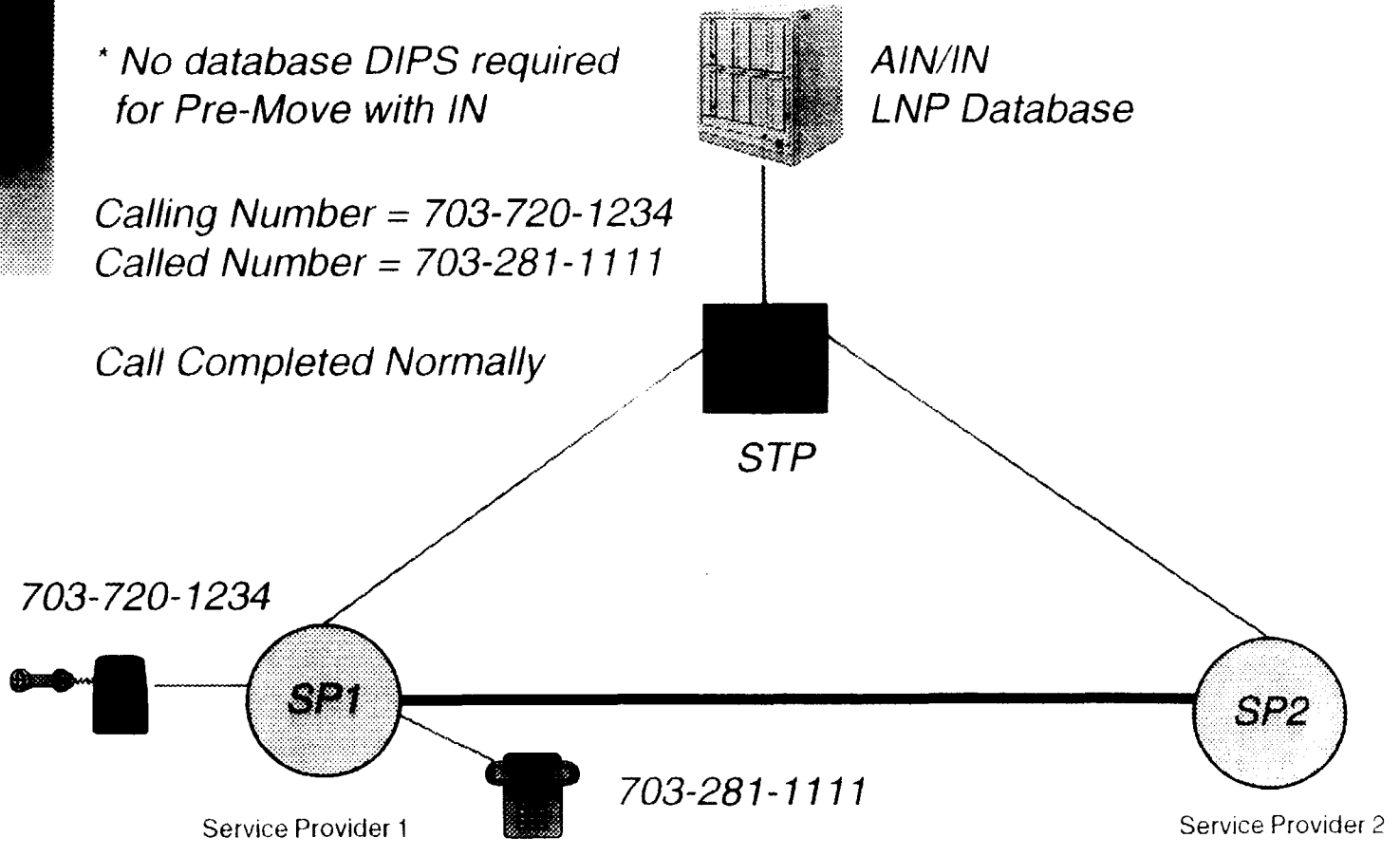

Local - Post-Move

Test Case 2

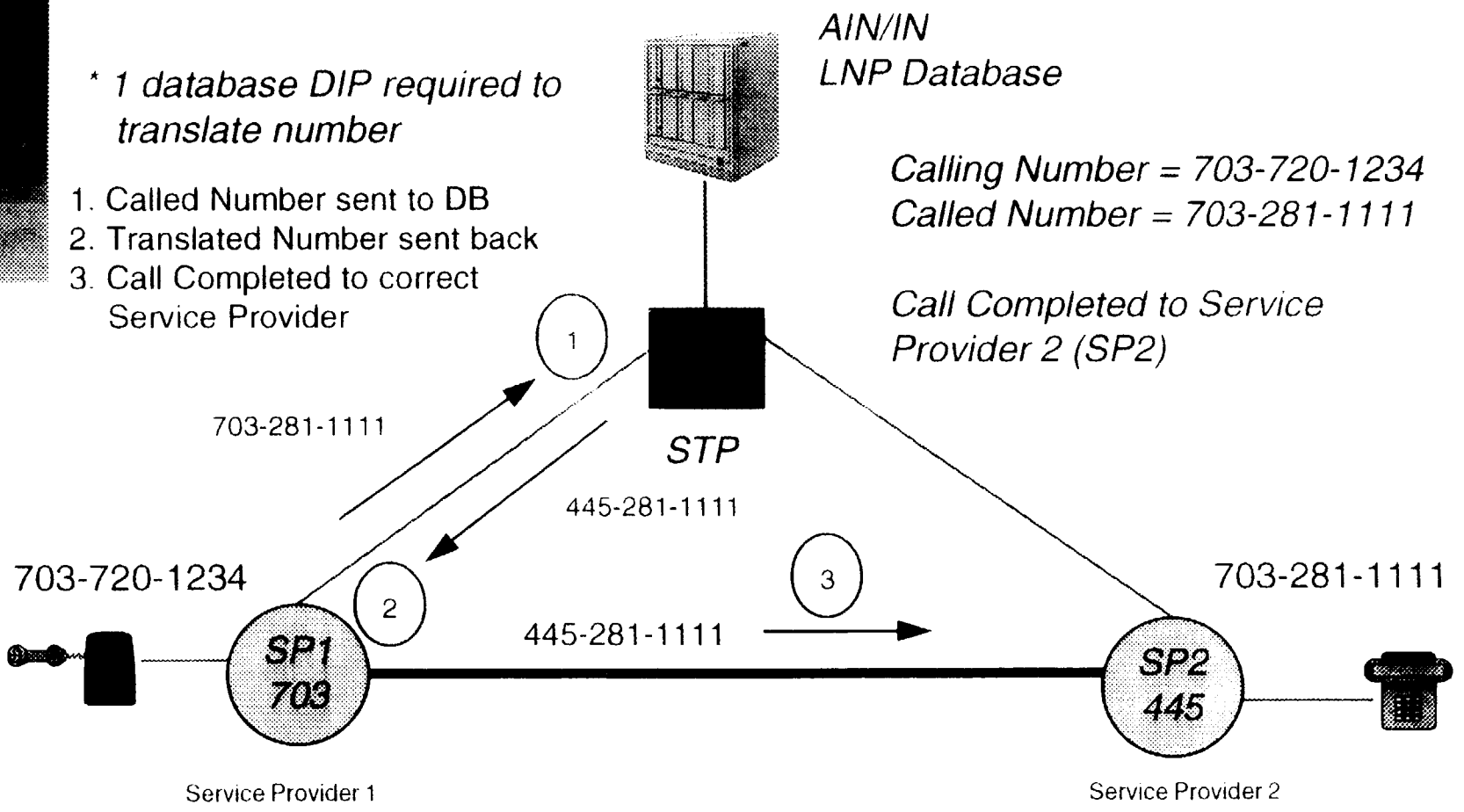

Inter LATA Post-Move

Test Case 3

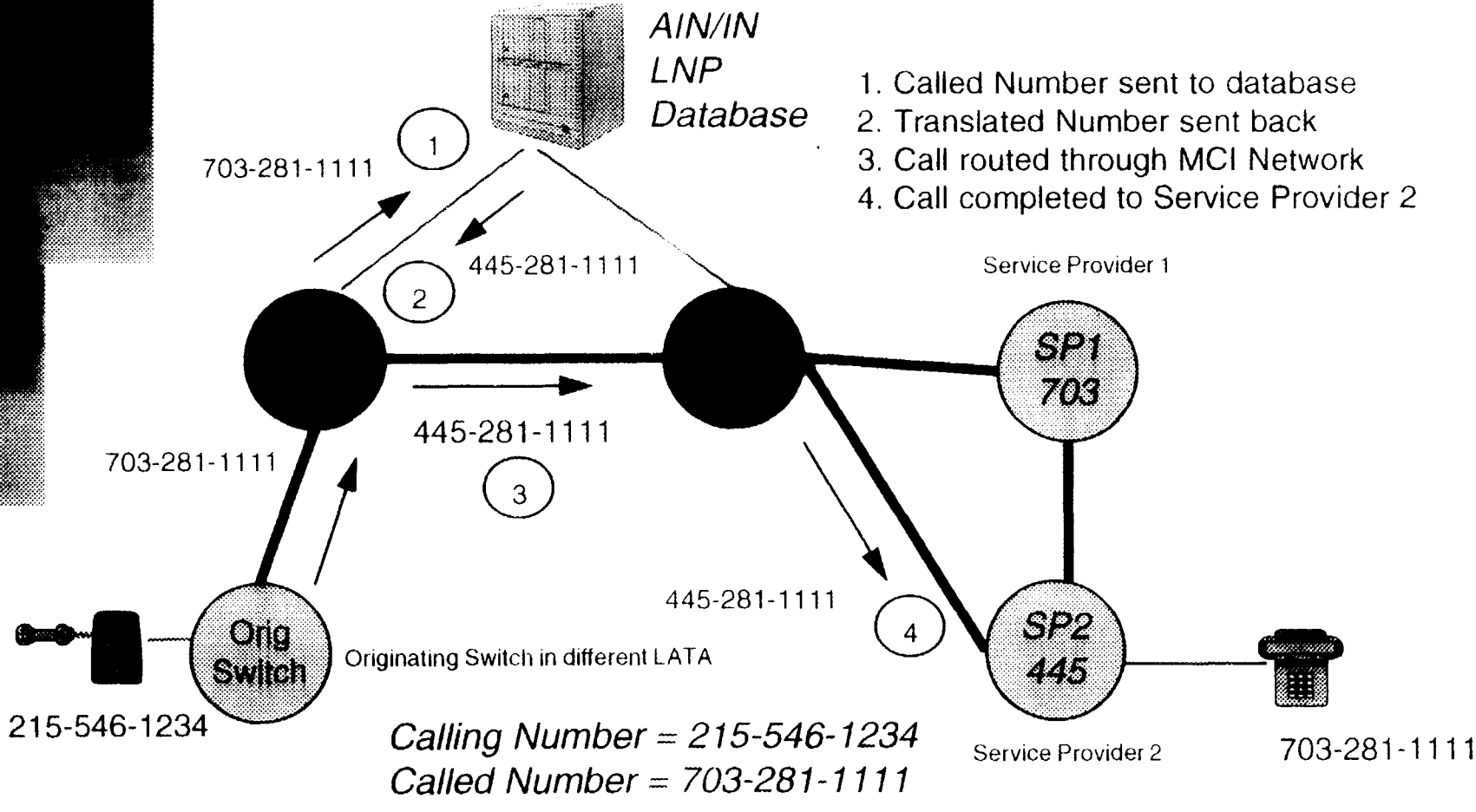

CLASS - Automatic Callback

Test Case 4

CLASS - Custom Local Area Signaling Service

1. Subscriber dials *66
2. Last Number Dialed sent to STP
3. STP performs 10 digit GTT for CLASS to reach correct switch.
4. Call Completes

Calling Number = 703-720-1234
Called Number = 703-281-1111

Call Completed to Service Provider 2 (SP2)

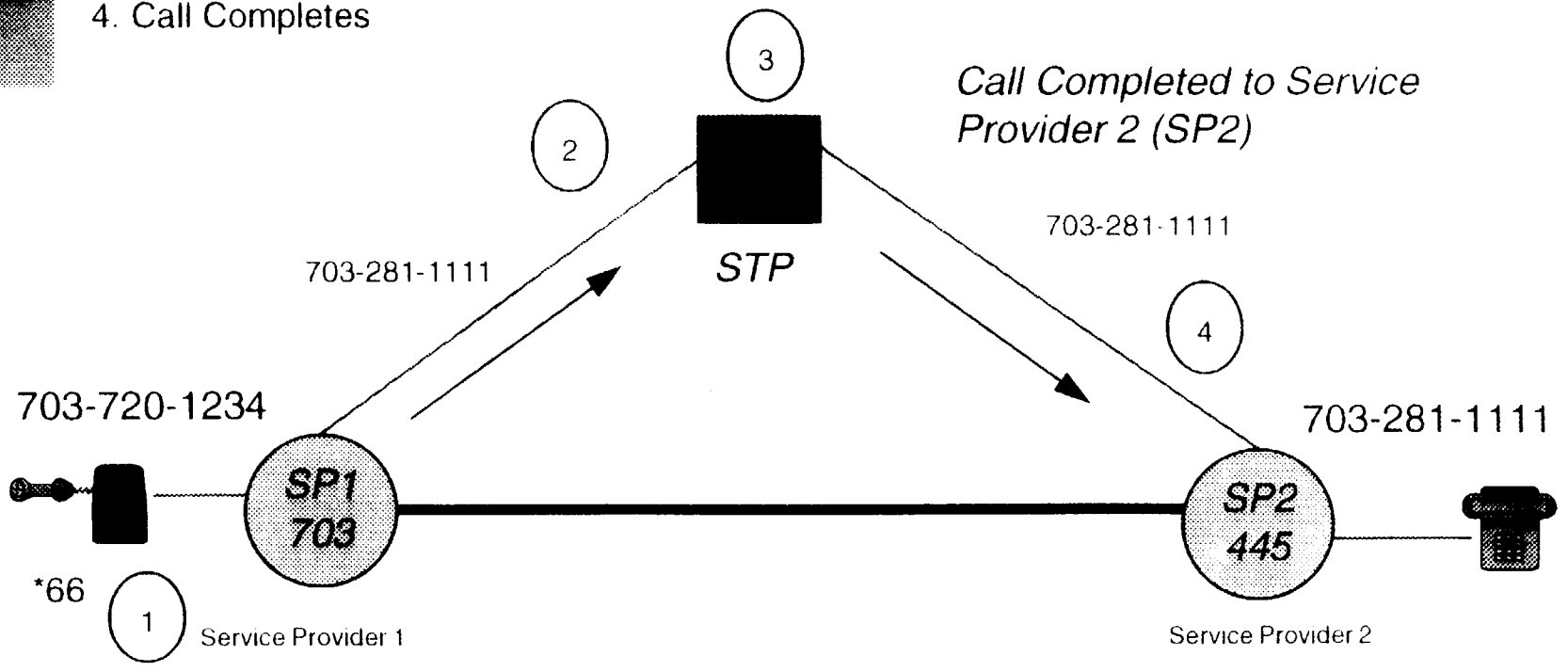

Comparison of Solutions

CPC Model

- External DB
- One Telephone Number
- Caller ID/CLASS Features
- Direct Route of Calls
- Calling Line ID (CLID) sent is published number

Interim

- In-Switch
- Two Telephone Numbers
- Caller ID/CLASS features require TCAP changes or ISDN/PRI
- Original LEC in Call Processing
- CLID sent is not published number (affects 911)

Current Status

- Highest Score in New York RFP Evaluation
- Testing/Discussion in Process with Ericsson and AT&T
- Proposal to be Reviewed in Illinois and California Considerations