DOCKET FILE COPY

DOCKET FILE COPY ORIGINAL

1201 NEW YORK AVENUE, N.W.
WASHINGTON, D.C. 20005-3919
(202) 789-3400
FAX (202) 789-1158

KECK, MAHIN & CATE

EX PARTE OR LATE FILED

FILE NUMBER 45737-002

DIRECT DIAL (202) 789-3447

August 21, 1995

RECEIVED
AUG 21 1995
FEDERAL COMMUNICATIONS COMMISSION
OFFICE OF SECRETARY

William F. Caton, Acting Secretary
Federal Communications Commission
Room 222
1919 M Street, N.W.
Washington, D.C. 20554

Re: Ex Parte Presentation
Interconnection and Resale Obligations, CC Dkt. No. 94-54
Implementation of Sections 3(n) and 332 of the Communications Act,
Gen. Dkt. No. 93-252

Dear Mr. Caton:

Enclosed please find a letter and attachment that were hand-delivered to Ruth Milkman, the Chairman's Senior Legal Advisor. Also enclosed are copies of letters that were sent with the same attachment to the following staff members: Rudolfo M. Baca, Legal Advisor for the Hon. James H. Quello, Lisa B. Smith, Legal Advisor for the Hon. Andrew C. Barrett, Jill Luckett, Special Advisor for the Hon. Rachelle B. Chong, David A. Siddall, Legal Advisor for the Hon. Susan Ness, Donald H. Gips, Deputy Chief of the Office of Plans and Policy, Gregory Rosston, Telecommunications Policy Analyst for the Office of Plans and Policy, Jane Phillips, Attorney for the Policy Division, Wireless Telecommunications Bureau, John Cimko, Jr., Chief, Policy Division, Wireless Telecommunications Bureau, Michael Wack, Deputy Chief, Policy Division, Wireless Telecommunications Bureau, and Barbara Esbin, Assistant Chief, Tariff Division, Common Carrier Bureau.

Sincerely,

KECK, MAHIN & CATE

Attorneys for California Cellular Resellers Association, Cellular Service, Inc., & ComTech, Inc.

By: Lewis J. Paper
Lewis J. Paper

Enclosures

1201 NEW YORK AVENUE, N.W.
WASHINGTON, D.C. 20005-3919
(202) 789-3400
FAX (202) 789-1158

KECK, MAHIN & CATE

FILE NUMBER 45737-002

DIRECT DIAL (202) 789-3447

August 18, 1995

Ruth Milkman, Senior Legal Advisor
Office of the Chairman
Federal Communications Commission
Room 814
1919 M Street, N.W.
Washington, D.C. 20554

Re: Ex Parte Presentation
Interconnection and Resale Obligations, CC Dkt. No. 94-54
Implementation of Sections 3(n) and 332 of the Communications Act,
Gen. Dkt. No. 93-252

Dear Ruth:

Enclosed please find a copy of a document filed with the California Public Utility Commission reporting the results of a test on a cellular reseller switch conducted by Ericsson Inc. The test results demonstrate that the reseller switch is compatible with the facilities of the FCC-licensed cellular carriers and provides the public benefits envisioned by the resellers.

The report is being placed in the record of the above-referenced dockets to provide further support for the Petition for Reconsideration (in Gen. Dkt. No. 93-252) and comments (in CC Dkt. 94-54) of the California cellular resellers that (1) the switch will further competition in the mobile communications market and (2) it would be inequitable to postpone implementation of the switch until other new mobile telecommunications technologies (such as PCS and ESMR) become mature.

Sincerely,

KECK, MAHIN & CATE

Attorneys for California Cellular Resellers Association, Inc., Cellular Service, Inc., & Comtech, Inc.

By: Lewis J. Paper

LJP:jlq
Enclosure
cc: William F. Caton

1006305C

1201 NEW YORK AVENUE, N.W.
WASHINGTON, D.C. 20005-3919
(202) 789-3400
FAX (202) 789-1158

KECK, MAHIN & CATE

FILE NUMBER 45737-002

DIRECT DIAL (202) 789-3447

August 21, 1995

Michael Wack, Deputy Chief
Policy Division
Wireless Telecommunications Bureau
Federal Communications Commission
Room 644
1919 M Street, N.W.
Washington, D.C. 20554

Re: Ex Parte Presentation
Interconnection and Resale Obligations, CC Dkt. No. 94-54
Implementation of Sections 3(n) and 332 of the Communications Act, Gen. Dkt. No. 93-252

Dear Michael:

Enclosed please find a copy of a document filed with the California Public Utility Commission reporting the results of a test on a cellular reseller switch conducted by Ericsson Inc. The test results demonstrate that the reseller switch is compatible with the facilities of the FCC-licensed cellular carriers and provides the public benefits envisioned by the resellers.

The report is being placed in the record of the above-referenced dockets to provide further support for the Petition for Reconsideration (in Gen. Dkt. No. 93-252) and comments (in CC Dkt. 94-54) of the California cellular resellers that (1) the switch will further competition in the mobile communications market and (2) it would be inequitable to postpone implementation of the switch until other new mobile telecommunications technologies (such as PCS and ESMR) become mature.

Sincerely,

KECK, MAHIN & CATE

Attorneys for California Cellular Resellers Association, Inc., Cellular Service, Inc., & Comtech, Inc.

By: Lewis J. Paper
Lewis J. Paper

LJP:jlq
Enclosure
cc: William F. Caton

1006305C

1201 NEW YORK AVENUE, N.W.
WASHINGTON, D.C. 20005-3919
(202) 789-3400
FAX (202) 789-1158

KECK, MAHIN & CATE

FILE NUMBER 45737-002

DIRECT DIAL (202) 789-3447

August 18, 1995

Rudolfo M. Baca, Legal Advisor
Office of the Honorable James H. Quello
Federal Communications Commission
Room 802
1919 M Street, N.W.
Washington, D.C. 20554

Re: Ex Parte Presentation
Interconnection and Resale Obligations, CC Dkt. No. 94-54
Implementation of Sections 3(n) and 332 of the Communications Act,
Gen. Dkt. No. 93-252

Dear Rudy:

Enclosed please find a copy of a document filed with the California Public Utility Commission reporting the results of a test on a cellular reseller switch conducted by Ericsson Inc. The test results demonstrate that the reseller switch is compatible with the facilities of the FCC-licensed cellular carriers and provides the public benefits envisioned by the resellers.

The report is being placed in the record of the above-referenced dockets to provide further support for the Petition for Reconsideration (in Gen. Dkt. No. 93-252) and comments (in CC Dkt. 94-54) of the California cellular resellers that (1) the switch will further competition in the mobile communications market and (2) it would be inequitable to postpone implementation of the switch until other new mobile telecommunications technologies (such as PCS and ESMR) become mature.

Sincerely,

KECK, MAHIN & CATE

Attorneys for California Cellular Resellers Association, Inc., Cellular Service, Inc., & Comtech, Inc.

By: Lew
Lewis J. Paper

LJP:jlq
Enclosure
cc: William F. Caton

1006305C

1201 NEW YORK AVENUE, N.W.
WASHINGTON, D.C. 20005-3919
(202) 789-3400
FAX (202) 789-1158

KECK, MAHIN & CATE

FILE NUMBER 45737-002

DIRECT DIAL (202) 789-3447

August 18, 1995

Lisa B. Smith, Legal Advisor
Office of the Honorable Andrew C. Barrett
Federal Communications Commission
Room 826
1919 M Street, N.W.
Washington, D.C. 20554

Re: Ex Parte Presentation
Interconnection and Resale Obligations, CC Dkt. No. 94-54
Implementation of Sections 3(n) and 332 of the Communications Act,
Gen. Dkt. No. 93-252

Dear Lisa:

Enclosed please find a copy of a document filed with the California Public Utility Commission reporting the results of a test on a cellular reseller switch conducted by Ericsson Inc. The test results demonstrate that the reseller switch is compatible with the facilities of the FCC-licensed cellular carriers and provides the public benefits envisioned by the resellers.

The report is being placed in the record of the above-referenced dockets to provide further support for the Petition for Reconsideration (in Gen. Dkt. No. 93-252) and comments (in CC Dkt. 94-54) of the California cellular resellers that (1) the switch will further competition in the mobile communications market and (2) it would be inequitable to postpone implementation of the switch until other new mobile telecommunications technologies (such as PCS and ESMR) become mature.

Sincerely,

KECK, MAHIN & CATE

Attorneys for California Cellular Resellers Association, Inc., Cellular Service, Inc., & Comtech, Inc.

By: Lew
Lewis J. Paper

LJP:jlq
Enclosure
cc: William F. Caton

1006305C

1201 NEW YORK AVENUE, N.W.
WASHINGTON, D.C. 20005-3919
(202) 789-3400
FAX (202) 789-1158

KECK, MAHIN & CATE

FILE NUMBER 45737-002

DIRECT DIAL (202) 789-3447

August 18, 1995

Jill Luckett, Special Advisor
Office of the Honorable Rachelle B. Chong
Federal Communications Commission
Room 844
1919 M Street, N.W.
Washington, D.C. 20554

Re: Ex Parte Presentation
Interconnection and Resale Obligations, CC Dkt. No. 94-54
Implementation of Sections 3(n) and 332 of the Communications Act,
Gen. Dkt. No. 93-252

Dear Jill:

Enclosed please find a copy of a document filed with the California Public Utility Commission reporting the results of a test on a cellular reseller switch conducted by Ericsson Inc. The test results demonstrate that the reseller switch is compatible with the facilities of the FCC-licensed cellular carriers and provides the public benefits envisioned by the resellers.

The report is being placed in the record of the above-referenced dockets to provide further support for the Petition for Reconsideration (in Gen. Dkt. No. 93-252) and comments (in CC Dkt. 94-54) of the California cellular resellers that (1) the switch will further competition in the mobile communications market and (2) it would be inequitable to postpone implementation of the switch until other new mobile telecommunications technologies (such as PCS and ESMR) become mature.

Sincerely,

KECK, MAHIN & CATE

Attorneys for California Cellular Resellers Association, Inc., Cellular Service, Inc., & Comtech, Inc.

By: Lewis J. Paper

LJP:jlq
Enclosure
cc: William F. Caton

1006305C

1201 NEW YORK AVENUE, N.W.
WASHINGTON, D.C. 20005-3919
(202) 789-3400
FAX (202) 789-1158

KECK, MAHIN & CATE

FILE NUMBER 45737-002

DIRECT DIAL (202) 789-3447

August 18, 1995

David A. Siddall, Legal Advisor
Office of the Honorable Susan Ness
Federal Communications Commission
Room 832
1919 M Street, N.W.
Washington, D.C. 20554

Re: Ex Parte Presentation
Interconnection and Resale Obligations, CC Dkt. No. 94-54
Implementation of Sections 3(n) and 332 of the Communications Act,
Gen. Dkt. No. 93-252

Dear David:

Enclosed please find a copy of a document filed with the California Public Utility Commission reporting the results of a test on a cellular reseller switch conducted by Ericsson Inc. The test results demonstrate that the reseller switch is compatible with the facilities of the FCC-licensed cellular carriers and provides the public benefits envisioned by the resellers.

The report is being placed in the record of the above-referenced dockets to provide further support for the Petition for Reconsideration (in Gen. Dkt. No. 93-252) and comments (in CC Dkt. 94-54) of the California cellular resellers that (1) the switch will further competition in the mobile communications market and (2) it would be inequitable to postpone implementation of the switch until other new mobile telecommunications technologies (such as PCS and ESMR) become mature.

Sincerely,

KECK, MAHIN & CATE

Attorneys for California Cellular Resellers Association, Inc., Cellular Service, Inc., & Comtech, Inc.

By: Lew
Lewis J. Paper

LJP:jlq
Enclosure
cc: William F. Caton

1201 NEW YORK AVENUE, N.W.
WASHINGTON, D.C. 20005-3919
(202) 789-3400
FAX (202) 789-1158

KECK, MAHIN & CATE

FILE NUMBER 45737-002

DIRECT DIAL (202) 789-3447

August 18, 1995

Donald H. Gips, Deputy Chief
Office of Plans and Policy
Federal Communications Commission
Room 822
1919 M Street, N.W.
Washington, D.C. 20554

Re: Ex Parte Presentation
Interconnection and Resale Obligations, CC Dkt. No. 94-54
Implementation of Sections 3(n) and 332 of the Communications Act, Gen. Dkt. No. 93-252

Dear Don:

Enclosed please find a copy of a document filed with the California Public Utility Commission reporting the results of a test on a cellular reseller switch conducted by Ericsson Inc. The test results demonstrate that the reseller switch is compatible with the facilities of the FCC-licensed cellular carriers and provides the public benefits envisioned by the resellers.

The report is being placed in the record of the above-referenced dockets to provide further support for the Petition for Reconsideration (in Gen. Dkt. No. 93-252) and comments (in CC Dkt. 94-54) of the California cellular resellers that (1) the switch will further competition in the mobile communications market and (2) it would be inequitable to postpone implementation of the switch until other new mobile telecommunications technologies (such as PCS and ESMR) become mature.

Sincerely,

KECK, MAHIN & CATE

Attorneys for California Cellular Resellers Association, Inc., Cellular Service, Inc., & Comtech, Inc.

By: LPW
Lewis J. Paper

LJP:jlq
Enclosure
cc: William F. Caton

1201 NEW YORK AVENUE, N.W.
WASHINGTON, D.C. 20005-3919
(202) 789-3400
FAX (202) 789-1158

KECK, MAHIN & CATE

FILE NUMBER 45737-002

DIRECT DIAL (202) 789-3447

August 18, 1995

Gregory Rosston
Office of Plans and Policy
Federal Communications Commission
Room 822
1919 M Street, N.W.
Washington, D.C. 20554

Re: Ex Parte Presentation
Interconnection and Resale Obligations, CC Dkt. No. 94-54
Implementation of Sections 3(n) and 332 of the Communications Act,
Gen. Dkt. No. 93-252

Dear Greg:

Enclosed please find a copy of a document filed with the California Public Utility Commission reporting the results of a test on a cellular reseller switch conducted by Ericsson Inc. The test results demonstrate that the reseller switch is compatible with the facilities of the FCC-licensed cellular carriers and provides the public benefits envisioned by the resellers.

The report is being placed in the record of the above-referenced dockets to provide further support for the Petition for Reconsideration (in Gen. Dkt. No. 93-252) and comments (in CC Dkt. 94-54) of the California cellular resellers that (1) the switch will further competition in the mobile communications market and (2) it would be inequitable to postpone implementation of the switch until other new mobile telecommunications technologies (such as PCS and ESMR) become mature.

Sincerely,

KECK, MAHIN & CATE

Attorneys for California Cellular Resellers Association, Inc., Cellular Service, Inc., & Comtech, Inc.

By: Lew
Lewis J. Paper

LJP:jlq
Enclosure
cc: William F. Caton

1006305C

1201 NEW YORK AVENUE, N.W.
WASHINGTON, D.C. 20005-3919
(202) 789-3400
FAX (202) 789-1158

KECK, MAHIN & CATE

FILE NUMBER 45737-002

DIRECT DIAL (202) 789-3447

August 18, 1995

Jane Phillips
Wireless Telecommunications Bureau
Federal Communications Commission
Room 5202D
2025 M Street, N.W.
Washington, D.C. 20554

Re: Ex Parte Presentation
Interconnection and Resale Obligations, CC Dkt. No. 94-54
Implementation of Sections 3(n) and 332 of the Communications Act,
Gen. Dkt. No. 93-252

Dear Jane:

Enclosed please find a copy of a document filed with the California Public Utility Commission reporting the results of a test on a cellular reseller switch conducted by Ericsson Inc. The test results demonstrate that the reseller switch is compatible with the facilities of the FCC-licensed cellular carriers and provides the public benefits envisioned by the resellers.

The report is being placed in the record of the above-referenced dockets to provide further support for the Petition for Reconsideration (in Gen. Dkt. No. 93-252) and comments (in CC Dkt. 94-54) of the California cellular resellers that (1) the switch will further competition in the mobile communications market and (2) it would be inequitable to postpone implementation of the switch until other new mobile telecommunications technologies (such as PCS and ESMR) become mature.

Sincerely,

KECK, MAHIN & CATE

Attorneys for California Cellular Resellers Association, Inc., Cellular Service, Inc., & Comtech, Inc.

By: Lewis J. Paper

LJP:jlq
Enclosure
cc: William F. Caton

1201 NEW YORK AVENUE, N.W.
WASHINGTON, D.C. 20005-3919
(202) 789-3400
FAX (202) 789-1158

KECK, MAHIN & CATE

FILE NUMBER 45737-002

DIRECT DIAL (202) 789-3447

August 18, 1995

John Cimko, Jr., Chief
Policy Division
Wireless Telecommunications Bureau
Federal Communications Commission
Room 644
1919 M Street, N.W.
Washington, D.C. 20554

Re: Ex Parte Presentation
Interconnection and Resale Obligations, CC Dkt. No. 94-54
Implementation of Sections 3(n) and 332 of the Communications Act, Gen. Dkt. No. 93-252

Dear John:

Enclosed please find a copy of a document filed with the California Public Utility Commission reporting the results of a test on a cellular reseller switch conducted by Ericsson Inc. The test results demonstrate that the reseller switch is compatible with the facilities of the FCC-licensed cellular carriers and provides the public benefits envisioned by the resellers.

The report is being placed in the record of the above-referenced dockets to provide further support for the Petition for Reconsideration (in Gen. Dkt. No. 93-252) and comments (in CC Dkt. 94-54) of the California cellular resellers that (1) the switch will further competition in the mobile communications market and (2) it would be inequitable to postpone implementation of the switch until other new mobile telecommunications technologies (such as PCS and ESMR) become mature.

Sincerely,

KECK, MAHIN & CATE

Attorneys for California Cellular Resellers Association, Inc., Cellular Service, Inc., & Comtech, Inc.

By: Lew
Lewis J. Paper

LJP:jlq
Enclosure
cc: William F. Caton

1006305C

1201 NEW YORK AVENUE, N.W.
WASHINGTON, D.C. 20005-3919
(202) 789-3400
FAX (202) 789-1158

KECK, MAHIN & CATE

FILE NUMBER 45737-002

DIRECT DIAL (202) 789-3447

August 18, 1995

Ms. Barbara Esbin
Common Carrier Bureau
Federal Communications Commission
Room 518
1919 M Street, N.W.
Washington, D.C. 20554

Re: Ex Parte Presentation
Interconnection and Resale Obligations, CC Dkt. No. 94-54
Implementation of Sections 3(n) and 332 of the Communications Act,
Gen. Dkt. No. 93-252

Dear Barbara:

Enclosed please find a copy of a document filed with the California Public Utility Commission reporting the results of a test on a cellular reseller switch conducted by Ericsson Inc. The test results demonstrate that the reseller switch is compatible with the facilities of the FCC-licensed cellular carriers and provides the public benefits envisioned by the resellers.

The report is being placed in the record of the above-referenced dockets to provide further support for the Petition for Reconsideration (in Gen. Dkt. No. 93-252) and comments (in CC Dkt. 94-54) of the California cellular resellers that (1) the switch will further competition in the mobile communications market and (2) it would be inequitable to postpone implementation of the switch until other new mobile telecommunications technologies (such as PCS and ESMR) become mature.

Sincerely,

KECK, MAHIN & CATE

Attorneys for California Cellular Resellers Association, Inc., Cellular Service, Inc., & Comtech, Inc.

By: Lewis J. Paper

LJP:jlq
Enclosure
cc: William F. Caton

1006305C

BEFORE THE PUBLIC UTILITIES COMMISSION OF THE STATE OF CALIFORNIA

Investigation on the Commission's own motion into Mobile Telephone Service and Wireless Communications	))))	I.93-12-007

RECEIVED
PUBLIC UTILITIES
95 JUL 31 PM 1:25
DOCKET OFFICE

DECISION 95-03-042 TEST COMPLIANCE REPORT

In accordance with Decision 95-03-042, Cellular Resellers Association, Inc., by its Attorney hereby encloses the reseller switch test debriefing documents prepared by Ericsson and the resellers' engineering firm, Midgley and Associates. All call scenarios were performed successfully as per the test plan with the exception of a reseller to reseller mobile call handoff that was directly attributed to a defective mobile phone. This test call was completed successfully several times during the pre-trial test and therefore is certified as valid by Ericsson.

Respectfully submitted,

Peter A. Casciato
8 California Street, Suite 701
San Francisco, CA 94111
(415) 291-8661

July 31, 1995

Attorney for Cellular Resellers Association, Inc.

CERTIFICATE OF SERVICE

I, Katie McHale certify that the following is true and correct:

I am employed in the City and County of San Francisco, California, am over the age of eighteen years, and am not a party to the within entitled action:

My business address is: 8 California St., Suite 701, San Francisco, California 94111.

On July 31, 1995, I served the attached DECISION 95-03-042 TEST COMPLIANCE REPORT by causing true copies thereof, enclosed in sealed envelopes with postage thereon fully prepaid, to be placed in the United States Post Office mail box at San Francisco, California, addressed to the following listed people on the official service list in I.93-12-007.

Katie McHale

Hon. Thomas Pulsifer
Administrative Law Judge
Public Utilities Commission
505 Van Ness Ave., Rm 5020
San Francisco, CA 94102

Janice Grau, Esq.
Public Utilities Commission
505 Van Ness Avenue, Rm 5023
San Francisco, CA 94102

Linda Woods
Public Utilities Commission
505 Van Ness Avenue
Room 4007
San Francisco, CA 94102

William H. Booth, Esq.
Jackson Tufts Cole & Black
650 California Street
San Francisco, CA 94108

Mary B. Cranston, Esq.
Pillsbury Madison & Sutro
225 Bush Street
P.O. Box 7880
San Francisco, CA 94120

Robert J. Gloistein
Orrick Herrington & Sutcliffe
400 Sansome Street
San Francisco, CA 94111

Martin A. Mattes, Esq.
Rachelle B. Chong, Esq.
Graham & James
One Maritime Plaza Third Floor
San Francisco, CA 94111

Adam Anderson, Senior Counsel
Bay Area Cellular Telephone
651 Gateway Blvd Suite 1500
S San Francisco, CA 94080

Teresa Cabral, Esq.
Pacific Bell
2600 Camino Ramon
Rm. 2W806
San Ramon, CA 94583

A.H. Pelavia/M.P. Schrieber
Cooper White & Cooper
201 California Street 17th Flr
San Francisco CA 94111

James D. Squeri, Esq.
Barbara L. Snider, Esq.
Armour Goodin Schlotz MacBride
505 Sansome Street 9th Floor
San Francisco, CA 94111

James M. Tobin, Esq.
Morrison & Foerster
345 California Street
San Francisco, CA 94104

David M. Wilson, Esq.
Young, Vogl, Harlick & Wilson
425 California St., Ste 2500
San Francisco, CA 94104

Earl Nicholas Selby, Esq.
420 Florence Street Suite 200
Palo Alto, CA 94301

Michael W. Mowery
PacTel Corporation
2999 Oak Road, MS 800
Walnut Creek, CA 94596

Judith A. Endejan
GTE California, Inc.
One GTE Place, CA500LB
Thousand Oaks, CA 91362

Tom Bugbee
Bruce Malt
Count of Los Angeles
PO Box 2231
Downey, CA 90242

Mark E. Brown, Esq.
Regulatory & Gvtl Affairs
MCI Telecommunications
201 Spear St., 9th Fl.
San Francisco, CA 94105

Richard A. Purkey/Sprint
1850 Gateway Dr., 7th Fl.
San Mateo, CA 94404-2467

Scott K. Morris
McCaw Cellular Communications
5400 Carillon Point
Kirkland, WA 98033

R.S. Foosaner/L.R. Krevor
Nextel Communications, Inc.
800 Connecticut Ave, NW
Suite 1001
Washington, DC 20006

Mark Savage/Robert Gnaizda
Public Advocates, Inc.
1535 Mission Street
San Francisco, CA 94120

Lee. L. Selwyn
Economics & Technology, Inc.
One Washington Mall
Boston, MA 02108

Monique Byrnes
Technologies Management,
P.O. Drawer 200
163 E. Morse Blvd., Ste. 300
Winter Park, FL 32790

Thomas J. Long, Staff Attorney
TURN
625 Polk Street, Ste. 403
San Francisco, CA 94102

Paul David Marotta
The Corporate Law Group
Waterfront Plaza
500 Airport Blvd, Ste. 120
Burlingame, CA 94010

M. Shames/L. Briggs, Esqs.
Utility Consumers' Action Network
1717 Kettner Blvd., #105
San Diego, CA 92101

M.B. Day/J.F. Candelaria
Wright & Talisman
100 Bush Street, Ste.225
San Francisco, CA 94106

ERICSSON

Date: 7/25/95

VIA FAX

Mr. Harry Midgley
Midgley & Associates
15600 Ash Drive
Overland Park, KS 66224
(913) 897-0763 fax

Dear Sir:

Ericsson is pleased to inform you that the technical field trial conducted to confirm the commercial operation for a reseller switch has been completed. All call scenarios were performed successfully as per the test plan with the exception of a reseller to reseller mobile call handoff that was directly attributed to a defective mobile phone. This test call was completed successfully several times during the pre-trial test and therefore is certified as valid.

The call connect times for certain call scenarios were determined to be excessive because the trial system configuration included routing these calls through the Ericsson Private Branch Exchange (PBX). This routing and excessive call connect time would be eliminated in a normal call scenario.

Roger Boivin

Roger Boivin
Director, Strategic Accounts

Doc#: RB-95060

Classification:

Certificate No. FM 11374Q

Ericsson Inc.
Radio Systems
740 East Campbell Road
Richardson, Texas 75081

Telephone: (214) 952-8800

Prepared	Subject responsible	Document No		
S. GIBBS		EUS/R/MT-95:023		
Approved	**Checked**	**Date**	**Rev**	**File**
J. TOKARZ		07/24/95	PA2	/TSS

RESELLER TEST REPORT

Ericsson Radio Systems, in cooperation with the Cellular Resellers (Cellular Service, Inc., Comtech, Inc., Nova Cellular West, Inc., and Nationwide Cellular Service, Inc.) and the Cellular Service Providers (Los Angeles Cellular Telephone Company (LACTC) and McCaw Cellular Communications, Inc. (McCaw)), configured a reseller switch in their Richardson, Texas facility to demonstrate it's operational viability.

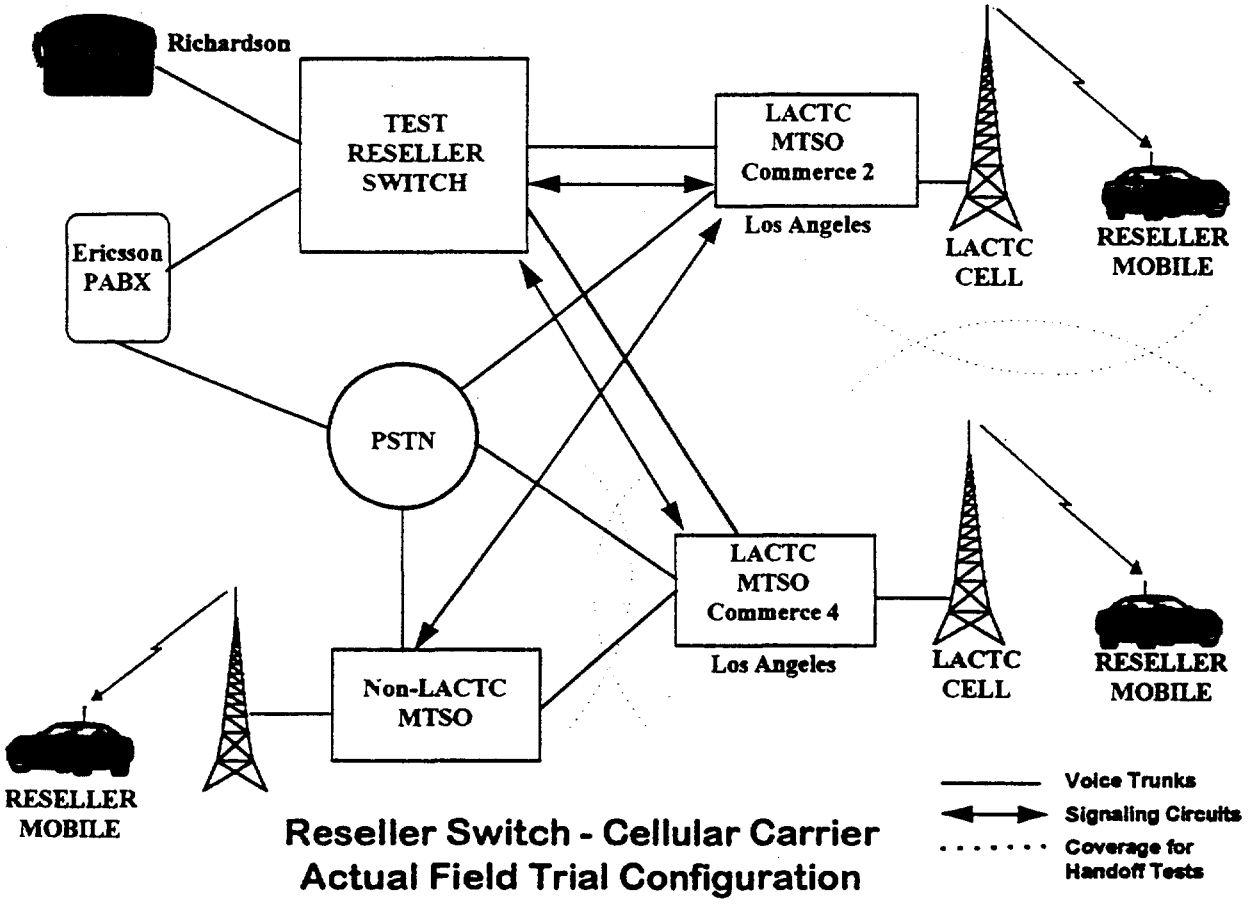

Reseller Switch - Cellular Carrier Actual Field Trial Configuration

The figure shows the actual implementation. One comment must be made concerning the use of the Ericsson PABX in these trials. The phone numbers provided by the reseller were not "live" numbers in the North American Numbering Plan. The numbers were only activated in the LA Commerce 2 and Commerce 4 MTSOs, the Reseller Switch (Ericsson Test Bed), and the Ericsson PABX. As a result, exchanges in the Public Switched Telephone Network (PSTN) could not deliver calls to those numbers. In order to demonstrate calls to a reseller mobile, a "real" number,

assigned to the Ericsson PABX, was called, then the PABX translated the number to the assigned Reseller mobile number. Calls were then delivered via the Reseller switch.

A summary of all test procedures performed is listed below. Those tests marked "Skipped" could not be performed for the reasons indicated.

7.1 Home Subscribers (Reseller)
- 7.1.1 Reseller Mobile to Reseller Mobile
- 7.1.2 Reseller Mobile to Mobile in existing cellular network
- 7.1.3 Reseller Mobile to Land
- 7.1.4 Reseller Mobile to Land
- 7.1.5 Land to Reseller Mobile

7.2 Test of Call Hand-offs
- 7.2.1 Call hand-off same switch
- 7.2.2 Call Hand-off between different switches

7.3 Feature Activation and Deactivation for Home Subscribers (Reseller)
- 7.3.1 Call Transfer (Immediate) to a seven digit number
- 7.3.2 Call Transfer (Immediate) to a ten digit number
- 7.3.3 Call Transfer (Immediate) to a eleven digit number
- 7.3.4 Call Transfer on busy (TRB-2) to a seven digit number
- 7.3.5 Call Transfer on busy to a ten digit number
- 7.3.6 Call Transfer on busy to an eleven digit number
- 7.3.7 Call Transfer on no reply / no answer (TRN-4) to a seven digit number
- 7.3.8 Call Transfer on no reply / no answer to a ten digit number
- 7.3.9 Call Transfer on no reply / no answer to an eleven digit number
- 7.3.10 Call Waiting (CAW-1)
- 7.3.11 Call Inquiry / Conference Calling (ENQ-4) Three way call

7.4 Automatic Roamers (Resellers In Other Existing Cellular Networks)
- 7.4.1 Automatic (Reseller) Roaming to Other Mobiles
- 7.4.2 A call from a mobile subscriber to an automatic roaming reseller
- 7.4.3 Reseller Automatic Roaming Mobile to Land
- 7.4.4 Reseller Automatic Roaming Mobile to Land
- 7.4.5 Land to Reseller Automatic Roaming Mobile7.4.6 Reseller Automatic Roaming to Reseller Automatic Roaming Mobile

7.5 Test of Call Hand-offs - Reseller Roaming
- 7.5.1 Call hand-off same switch
- 7.5.2 Call Hand-off between different switches - Skipped - This test cannot be demonstrated. Requires the mobile to roam in two different switches

7.6 Feature Activation and Deactivation for Autoroaming Subscribers (Reseller)
- 7.6.1 Call Transfer (CTR-1) to a seven digit number - Skipped - This test cannot be demonstrated. Transfer to 7 digit number invalid while roaming *1
- 7.6.2 Call Transfer (CTR-1) to a ten digit number
- 7.6.3 Call Transfer (CTR-1) to a eleven digit number

7.6.4 Call Transfer on busy (TRB-2) to a seven digit number - Skipped - This Section cannot be demonstrated. Transfer to 7 digit number invalid while roaming *1

7.6.5.1 Call Transfer on busy (TRB-2) to a ten digit number

7.6.5.2 Call Transfer on busy (TRB-2) to an eleven digit number

7.6.6 Call Transfer on no reply / no answer (TRN-4) to a seven digit number - Skipped - Cannot demonstrate. Transfer to 7 digit number invalid while roaming *1

7.6.7 Call Transfer on no reply / no answer (TRN-4) to a ten digit number

7.6.8 Call Transfer on no reply / no answer (TRN-4) to an eleven digit number

7.6.9 Call Waiting (CAW-1)

7.6.10 Call Inquiry / Conference Calling (ENQ-4)

*1 Test attempted while roaming on the Santa Barbara switch. This test is not supported while roaming on any switch.

Cellular Resellers Switch / Los Angeles Cellular Telephone Company Interconnection Trial Results

MIDGLEY & ASSOCIATES
15600 ASH DRIVE,
OVERLAND PARK, KS 66224

JULY 31, 1995

Summary

The field trial began on Saturday, July 8, 1995, but due to problems with the leased facilities interconnecting Richardson, TX and Los Angeles, only one (1) call was completed, the testing was continued until and completed on Saturday, July 15, 1995. During the intervening week, Ericsson personnel pretested each call type in the test plan. This report contains the results of the trial.

The participants in the trial were:

Cellular Resellers --	Cellular Service, Inc.
	Comtech, Inc.
	Nova Cellular West, Inc.
	Nationwide Cellular Service, Inc.
Ericsson Radio Systems --	Equipment Manufacturer
Cellular Carriers --	Los Angeles Cellular Telephone Company ("LACTC")
	McCaw Cellular Communications, Inc. ("McCaw"), affiliate Santa Barbara/Ventura Cellular

The following cellular switches were used in the trial:

Cellular Resellers ---	Ericsson Radio system's test bed in Richardson, TX
Cellular Carriers --	LACTC's Commerce 2 and Commerce 4 MTSOs, Los Angeles, CA
	McCaw's San Barbara/Ventura MTSO, Santa Barbara, CA

Four mobile drive teams placed 101 calls during the test. All of the calls were completed successfully.

The trial successfully demonstrated that:

1. a reseller switch can be interconnected into the existing cellular network
2. subscribers of the reseller can originate and terminate wireless and wireline calls via the cell sites of the cellular carriers
3. the cellular carriers can request and receive validation from the reseller switch and route the subscriber's call to the reseller switch for routing and completion.

General

The purpose of the field trial was to commercially demonstrate that:

- a reseller switch could be interconnected with existing cellular carriers' MTSOs
- that the resellers' subscribers, with their own NPA-NXX telephone numbers, could be provided service through the cellular carrier's cell sites
- that the resellers' subscribers could roam and still have service
- that the reseller switch would not harm or interfere with the existing cellular network

The trial consisted of a ten reseller mobile telephones originating and terminating telephone calls. All of the parties agreed to test the full range of call scenarios summarized as follows:

1. A switch-based reseller subscriber originates a mobile call on the LACTC system and completes it via the reseller switch.
2. A land line originated call to the switch-based reseller subscriber is routed through the reseller switch and completed via LACTC's cell site.
3. A call in progress to a switch-based reseller subscriber is handed off between cells served by different LACTC MTSOs.
4. A switch-based reseller subscriber places and completes a call while roaming on a system other than LACTC.
5. A call in progress to a switch-base reseller subscriber is handed off between a cell served by an LACTC MTSO and a cell served by a non-LACTC MTSO.
6. A switch-based reseller subscriber places a call to 911 and the reseller switch routes the call to the agency responsible for providing the emergency service to the area served by the cell in which the call was originated.
7. For all calls the reseller switch receives the information required to create a standard cellular call record.
8. The call record information provided will allow for post-call fraud analysis.

Network Configuration

The field trial interconnected the reseller switch with two existing LACTC MTSOs designated by LACTC, Commerce 2 and Commerce 4 and the McCaw Santa Barbara/Ventura Cellular MTSO for roaming purposes. The network configuration is shown in Figure #1.

Test Plan & Procedure

Ericsson developed the test plan for the trial based upon the specification and their knowledge of what tests are normally run on a switch being installed in an existing network. Engineers for both the resellers and LACTC reviewed the test plan and made additions. The test for a call to 911 was modified from the specification because the software required to provide the originating cell information to the reseller switch was not installed in the LACTC MTSOs. The final test plan, "Standard Generic Test Call Plan (Reseller), Rev. E", is attached as Attachment A.

The tests were performed by four mobile telephone drive teams, indicated as Teams 1 - 4 on the procedure pages. Each team had two reseller or Ericsson personnel. During the test each MTSO had personnel from their company present to monitor progress and to insure the network was not

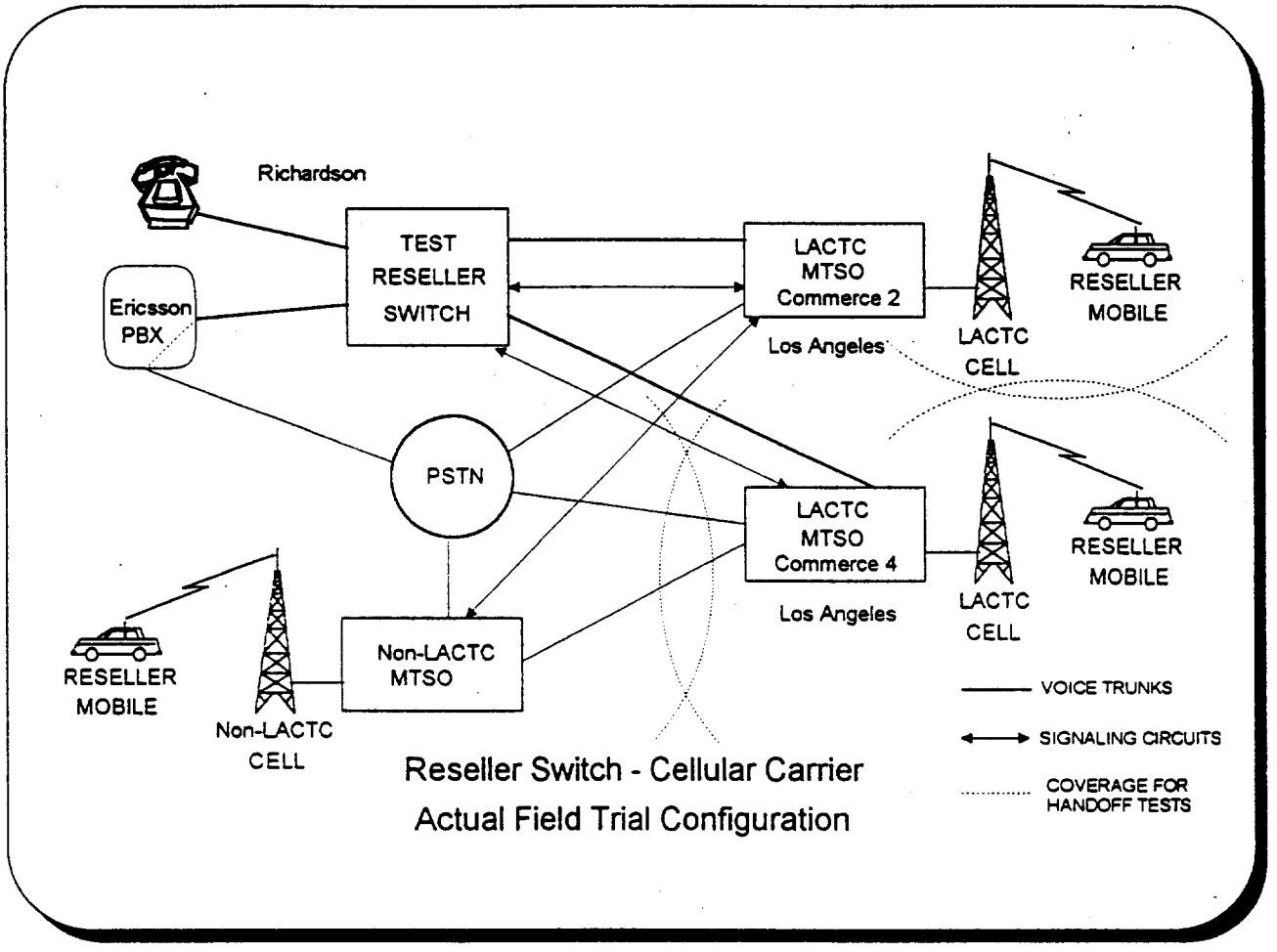

Figure #1

affected. In addition two Ericsson technicians and a consultant for the resellers were at the LACTC MTSOs for the same purpose.

Data Collected

The following data was collected from the test:

- Toll ticketing records from the Reseller switch
- SS-7 tracking file from the Reseller switch
- Cell tracking records from the LACTC MTSOs
- Toll ticketing records from the LACTC MTSOs

Even though all of the test calls were completed successfully, the toll ticketing records, cell tracking records and SS-7 files are being analyzed for additional information.

During the test call setup times were longer than would normally occur in a commercial environment. Calls on the cellular network normally experience a delay from the time a call is placed until it is completed. Typically this delay is as follows:

- Existing mobile to existing mobile call, both mobiles on the same switch - 7 seconds to response
- Landline to existing mobile - 10 seconds to response
- Existing mobile to landline - 10 seconds to response

The delays experienced in the field trial were due largely in part, if not entirely, to the limitations imposed by the testing scenario. Such limitations included forced routing through a PBX system, see below, as well as Data Translation Methodology required under the testing circumstances that will not be required when a Reseller switch is commercially operational. As a result, in commercial operations, the corresponding average delay would be:

- Existing mobile to reseller mobile call - 8 to 9 seconds to response
- Landline to reseller mobile - 12 seconds to response
- Reseller mobile to landline - 12 seconds to response
- Reseller mobile to reseller mobile - 10 seconds to response

As stated earlier, the Ericsson PBX was the interface between the reseller switch and the PSTN. Although the numbers assigned to the reseller mobiles were actual 10 digit North American numbers, they could not be reached via the PSTN. For example the routing for a call from an existing LACTC mobile to a reseller mobile was:

- The LACTC mobile dialed a local Richardson, TX number (214 437-811X), not the mobile's number, which was routed to the Ericsson PBX
- The PBX routed the call to the reseller switch
- The reseller switch had to translated the dialed number to the appropriate reseller mobile number
- The reseller switch then sent the call to the appropriate MTSO for completion

If the reseller switch had actually been in Los Angeles and directly connected to the LACTC MTSOs, then the PBX and its inherent timing delays would not have existed. Instead, with a reseller switch co-located or virtually co-located with the LACTC MTSOs, the example call would be completed as follows:

- The LACTC mobile dials the reseller subscriber's number
- The LACTC MTSO routes the call to the reseller switch via the local PSTN
- The reseller switch sends the call to the appropriate MTSO for completion

Figure #2 below depicts the reseller switch and the PBX configuration.

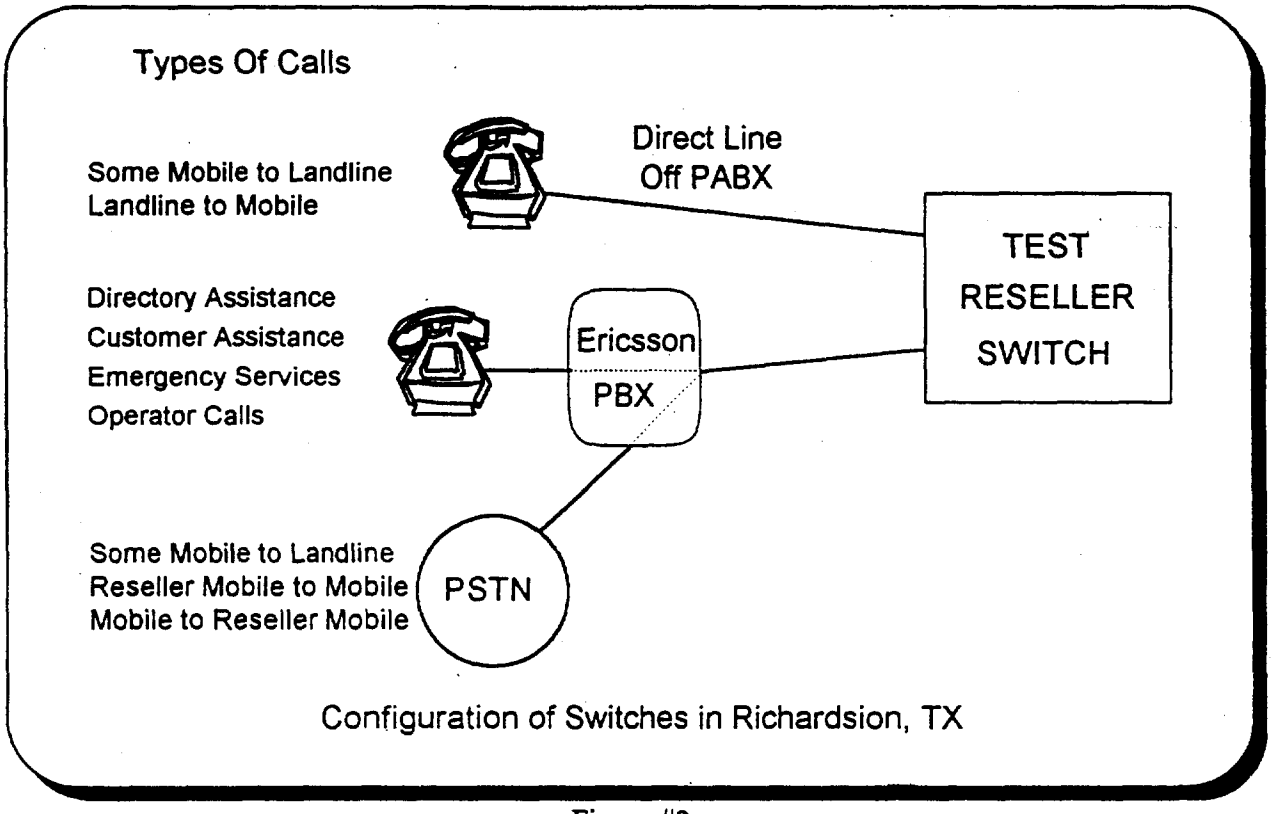

Figure #2

Conclusions

The trial successfully demonstrated:

1. a reseller switch can be interconnected into the existing cellular network
2. subscribers of the reseller can originate and terminate calls via the cell sites of the cellular carriers
3. the cellular carriers can request and receive validation from the reseller switch and route the subscriber's call to the reseller switch for routing and completion.

This report has been confirmed with Ericsson Radio System by Midgley & Associates.

Harry S. Midgley
July 31, 1995

Attachments

Attachment A -- Standard Generic Test Call Plan (Reseller), Rev. E