EX PARTE OR LATE FILED

WILEY, REIN & FIELDING

1776 K STREET, N.W.
WASHINGTON, D.C. 20006
(202) 429-7000

DOCKET FILE COPY ORIGINAL

August 21, 1995

WRITER'S DIRECT DIAL NUMBER
(202) 828-4987

FACSIMILE
(202) 429-7049

RECEIVED
AUG 21 1995
FEDERAL COMMUNICATIONS COMMISSION
OFFICE OF SECRETARY

Mr. William F. Caton
Acting Secretary
Federal Communications Commission
1919 M Street, N.W., Room 222
Washington, D.C. 20554
STOP CODE: 1170

Re: GEN Docket No. 90-314, ET Docket 92-100;
CC Docket No. 94-54

Dear Mr. Caton:

In accordance with Section 1.1206(a)(2) of the Commission's Rules, 47 C.F.R. §1.206(a)(2) (1991), this is to notify the Commission that on August 21, 1995, the Personal communications Industry Association ("PCIA") provided the enclosed documents to the following Commission staff: Ruth Milkman, Rudolfo Baca, Lauren "Pete" Belvin, Lisa Smith, Jill Luckett, Mary McManus, David Siddall, Donald Gips, Gregory Rosston, Regina Keeney, Laurence Atlas, Daniel Phythyon, Jackie Chorney, Jay Markley, Rosalind Allen, David Furth, Stephen Markendorff, Sally Novack, James Bennett, Kathleen O'Brien Ham, John Cimko and Michael Wack.

Should you have any questions regarding this matter, please contact the undersigned.

Respectfully submitted,

Lauren A. Carbaugh

Lauren A. Carbaugh

LAC/ean
Enclosures

No. of Copies rec'd 0+6
List ABCDE

EX PARTE OR LATE FILED

RECEIVED

AUG 21 1995

FEDERAL COMMUNICATIONS COMMISSION
OFFICE OF SECRETARY

Personal Communications Industry Association

1995 CMRS INTERCONNECTION HANDBOOK

Prepared by:

R. Michael Senkowski
Jeffrey S. Linder
Eric W. DeSilva
Ilene T. Weinreich
WILEY, REIN & FIELDING

Counsel to PCIA

Personal Communications Industry Association

1995 CMRS INTERCONNECTION HANDBOOK

Prepared by:

R. Michael Senkowski
Jeffrey S. Linder
Eric W. DeSilva
Ilene T. Weinreich
WILEY, REIN & FIELDING

Counsel to PCIA

TABLE OF CONTENTS

PAGE

INTRODUCTION iv

CHAPTER I: TECHNICAL ELEMENTS OF INTERCONNECTION 1

A. Physical Interconnection Facilities 1
  1. Transmission Interfaces 3
  2. Interconnection Types 5
    a. Description of Type 1 and Type 2 Variations 5
    b. Practical Differences Between Type 1 and Type 2 Interconnection 9

B. Telephone Numbers 10

CHAPTER II: INTERCONNECTION RIGHTS OF CMRS PROVIDERS 14

A. The FCC's Mobile Interconnection Policies Prior to the *Regulatory Parity* Decision 14
  1. The *Guardband* Decision 14
  2. 1976 and 1980 Memoranda of Understanding 15
  3. Divestiture and the 1986 Policy Statement 17
  4. The 1987 Interconnection Declaratory Ruling 19
    a. Federal/State Jurisdiction 20
    b. Specific Interconnection Rights 21
      (1) Reasonable Interconnection 23
      (2) Assignment of NXX Codes 23
      (3) Mutual Switching Compensation 24
      (4) Good Faith Negotiations 25

B. The Regulatory Parity Decision 26
  1. Interconnection Defined 27
  2. Extension of the 1987 Interconnection Policies 27
  3. Possible Federal Tariffing of Interconnection Rates 29

PAGE

CHAPTER III: OTHER INTERCONNECTION RIGHTS 30

A. Expanded Interconnection for Access Services 30

B. Open Network Architecture Rules and Advanced Intelligent Network Proposals 32
1. Open Network Architecture 32
2. Advanced Intelligent Network 32

CHAPTER IV: IMPORTANT TERMS AND CONDITIONS FOR TARIFFS AND AGREEMENTS 34

A. Rate Stability Commitment 34

B. Description of Facilities 36

C. Reservation and Assignment of Numbers 36

D. Rates, Charges, and Billing Arrangements 37

E. Mutual Compensation Mechanism 37

F. Service Interruption 37

G. Confidentiality 38

CONCLUSION 39

APPENDIX A: INDUSTRY CENTRAL OFFICE CODE ASSIGNMENT GUIDELINES

APPENDIX B: TARIFF REVIEW PROCESS

APPENDIX C: NEGOTIATING SUGGESTIONS FOR INTERCONNECTION AGREEMENTS

INDEX TO DIAGRAMS AND CHARTS

		PAGE
Diagram 1:	End Office and Tandem Interconnection	2
Diagram 2:	ISDN Interfaces	4
Diagram 3:	LEC Interconnection Configurations	6
Diagram 4:	Comparison of Access Arrangements Before and After Expanded Interconnection	31
Chart 1:	Summary of Interconnection Rights	22
Chart 2:	Important Terms and Conditions	35

INTRODUCTION

PCIA last published an interconnection handbook in 1987. At that time, three years after divestiture and three years before the FCC initiated its inquiry into Personal Communications Services, the mobile services industry was very different than it is today. Cellular operators were just beginning to build out systems in many markets and there was still a clear dividing line between Part 22 common carrier mobile radio services and Part 90 private carrier mobile radio services. Then as now, however, interconnection to the public switched telephone network was essential to the provision of mobile services, and was available from only one source: the landline local exchange carrier ("LEC").

In 1987, the Commission adopted an *Interconnection Declaratory Ruling* that established firm ground rules for interconnection negotiations between LECs and mobile carriers. That ruling forcefully confirmed the co-carrier status of mobile providers and their right to technically and economically reasonable interconnection. It established a regime of good faith negotiations that has reduced much of the delay and contentiousness that previously surrounded interconnection requests.

Eight years later, the *Interconnection Declaratory Ruling* remains the foundation for the FCC's mobile carrier interconnection policies. In the interim, however, there have been revolutionary changes to the industry and the FCC's regulations. Thousands of new personal communications licenses have been issued in 1994 and 1995, and each of these new licensees will need to secure interconnection to the PSTN before providing service. Moreover, additional thousands of previously private mobile service providers have been re-classified as common carrier Commercial Mobile Radio Service ("CMRS") providers, and now enjoy the regulatory rights and responsibilities established by the *Interconnection Declaratory Ruling*.

Against this background, this CMRS Interconnection Handbook seeks to describe, in practical terms, how the FCC's interconnection policies affect CMRS providers in their day-to-day business operations. To this end, the Handbook is organized as follows:

Chapter I examines the technical elements of interconnection. It explains the various physical interfaces and interconnection types available from many LECs, and also discusses the process by which CMRS providers are assigned telephone numbers for use by their subscribers. In addition, Chapter I looks at potential changes in the administration of telephone numbers and the introduction of new resources, such as 500 codes, that may be useful to CMRS providers wishing to offer "personal numbering" and non-geographic services.

Chapter II focuses on the interconnection rights of CMRS providers. This Chapter details the development of the FCC's interconnection policies, culminating in the *Interconnection Declaratory Ruling*. It then explains how the FCC clarified and extended those policies in the 1994 *Regulatory Parity Order*, with particular focus on the right to receive compensation for terminating traffic that originates on the landline network. Finally, Chapter II discusses considerations that may be raised by an FCC proposal to require federal interconnection tariffs.

Chapter III examines other interconnection rights that, while developed in separate FCC proceedings, may be of interest to CMRS providers. It looks specifically at interconnection rights set forth in the FCC's *Expanded Interconnection* and *Open Network Architecture* proceedings, and at proposed rights under consideration in the *Advanced Intelligent Network* docket.

Chapter IV contains suggestions for terms and conditions to be included in interconnection agreements (and in any interconnection tariffs that may be required at the state and federal levels). These terms and conditions address rate stability, description of the services provided, specification of charges, specification of a mutual compensation mechanism, liability for service interruptions, and similarly important areas.

Finally, the Handbook encompasses three appendices. Appendix A is the latest draft Central Office Code Administration Guidelines, which set forth principles to govern the assignment of central office (NXX) codes by LECs. Appendix B discusses the FCC's tariff review process. Appendix C contains brief suggestions for effective negotiation of interconnection agreements.

CHAPTER I: TECHNICAL ELEMENTS OF INTERCONNECTION

By definition, CMRS systems must be interconnected with the public switched telephone network ("PSTN"). Such interconnection has two main elements: a physical link between the wireless switching center and a local exchange carrier switch, and the assignment of telephone numbers to the CMRS provider's switch. This Chapter examines these technical elements of interconnection.

A. Physical Interconnection Facilities

For purposes of CMRS interconnection, the PSTN can be considered to be composed of LEC tandem switches and LEC end office switches, along with entrance facilities and transport between LEC switching offices. Generally, LEC end offices serve subscribers in a particular local service area. Each subscriber in that area has a telephone number beginning with an "NXX" code that is associated with that end office switch.[1] Tandem switches, in contrast, concentrate and distribute traffic among end-offices within the LATA, and may also provide operator services and 911 capabilities. Access tandems ("ATs") provide an access point to IXCs. As shown in Diagram 1 and discussed in further detail below, CMRS interconnection can occur at either the end office or at the tandem switch.

Physical interconnection requires a CMRS provider to select from a variety of transmission interfaces — for example, analog or digital — and interconnection types, which are variations on end office and tandem interconnection. In general, an interface may be thought of as the boundary

---

[1] Under the North American Numbering Plan ("NANP"), telephone numbers are in a format described as "NPA-NXX-XXXX." In this format, NPA represents an area code, NXX represents an central (or end) office code, and XXXX represents a particular phone within a central office serving area. Under the NANP designations, an "X" can be any digit from 0-9 and an "N" can be any digit from from 2-9.

For example, all subscribers whose telephone numbers begin with a 554 exchange would be served by the same LEC end office switch. Each end office switch may serve several NXX codes.

Diagram 1: End Office and Tandem Interconnection

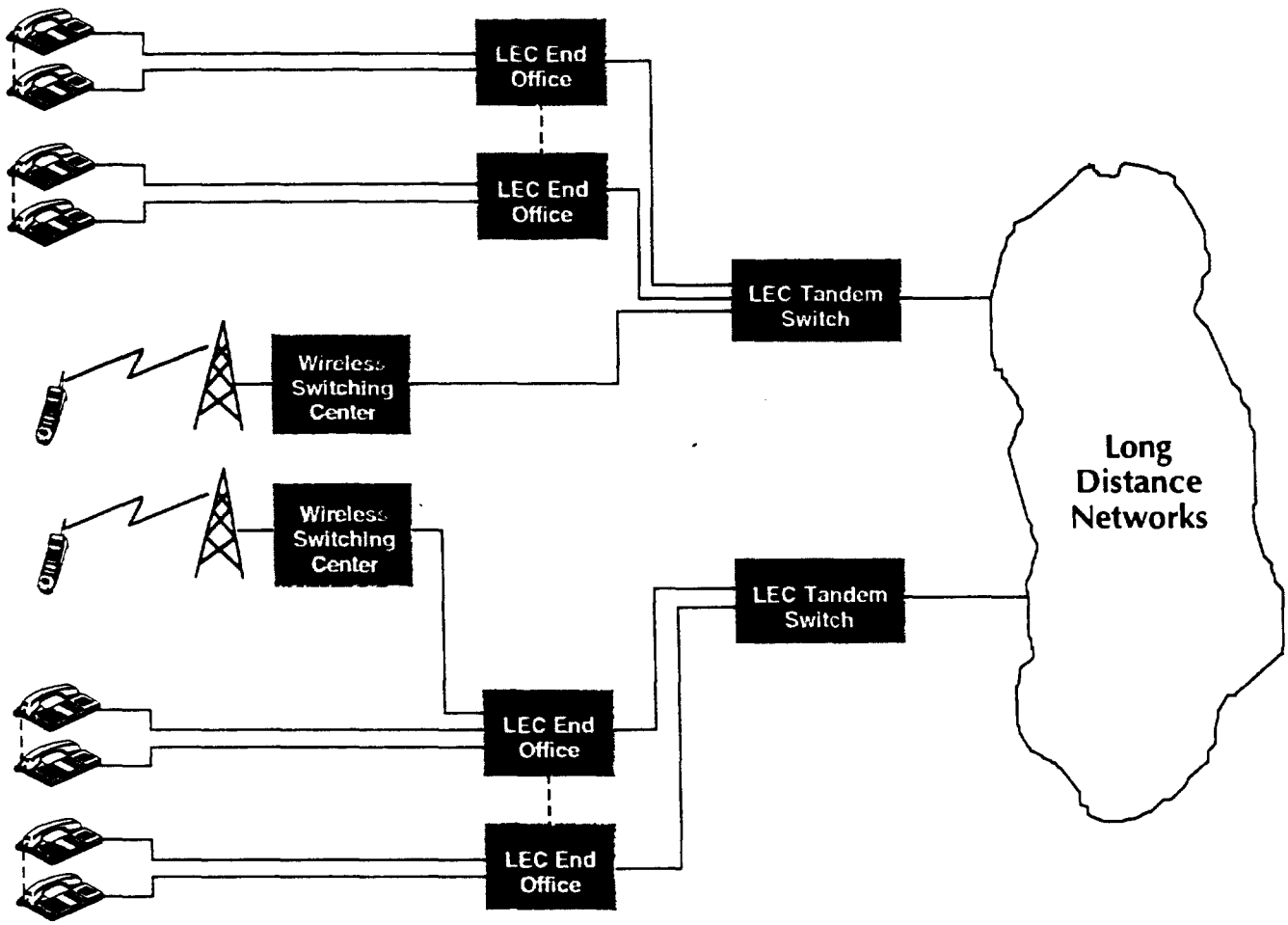

between the mobile and LEC networks. The interconnection types, in contrast, describe how CMRS networks interconnect with the LEC network and the capabilities associated with the interconnection.

1. Transmission Interfaces

Analog Transmission Interfaces. As a threshold matter, CMRS providers need to choose between analog and digital transmission interfaces. Historically, mobile and LEC networks used analog transmission technology. For analog transmission, options generally include either 2-wire or 4-wire systems. Four-wire systems utilize a pair of wires for transmission in each direction instead of superimposing both directions of transmission on a single pair. Although 4-wire systems increase the number of ports needed at a switch, it is easier to amplify and multiplex signals for long-distance transmission if the two directions of transmission are isolated from each other. Most interoffice trunks, for example, are implemented as 4-wire systems.

Digital Transmission Interfaces. Many CMRS providers, and most LECs, have begun to deploy digital transmission technology in order to increase efficiency and security and improve transmission quality. Digital interface options currently include DS1 (which transmits information at 1.544 megabits per second) and DS3 (which has the capacity of 28 DS1 channels). A DS1 channel is a basic unit in the North American time division multiplexing ("TDM") hierarchy, capable of supporting up to 24 voiceband channels. The DS3 interface is capable of supporting up to 672 voiceband channels. When Synchronous Optical Network ("SONET") is deployed, Optical Carrier ("OC") signal rates will be available ranging from OC-1 at 51.840 Mbps to OC-48 at 2,488 Mbps.

Common Channel Signaling Arrangements. Common channel signalling, where available, can improve call set-up time and enhance network efficiency. CMRS providers may be able to select common channel signaling arrangements in areas where Signaling System 7 ("SS7")

has been implemented. Instead of carrying signaling information on the circuit connection used for voice and data transmission, common channel, or out-of-band, signaling arrangments utilize a separate, dedicated packet data link. The segregation of signaling traffic on the network from circuit voice and data transmissions allows more efficient use of network resources.

ISDN Interfaces. In some areas, CMRS providers may have the option of obtaining basic rate or primary rate interfaces supporting Integrated Services Digital Network ("ISDN") capabilities. ISDN allows the transmission of multiple voice and data communications over the same circuit. As shown in Diagram 2, the ISDN standard defines 64 kbps B-channels, which are capable of circuit-mode or packet-mode information flows, and D-channels, which are signaling channels used for call control across the user-network interface. A typical ISDN Basic Rate Interface ("ISDN-BRI") is a "2B+D" interface, with a 16 kbps D-channel. Because a single D channel for an ISDN Primary Rate Interface ("ISDN-PRI") is 64 kbps and can control as many as 20 DS1 facilities, ISDN-PRI interfaces can range up to "479B+D."

Within these basic interface parameters, CMRS providers can select from among a number of interconnection types, as discussed below.

Diagram 2: ISDN Interfaces

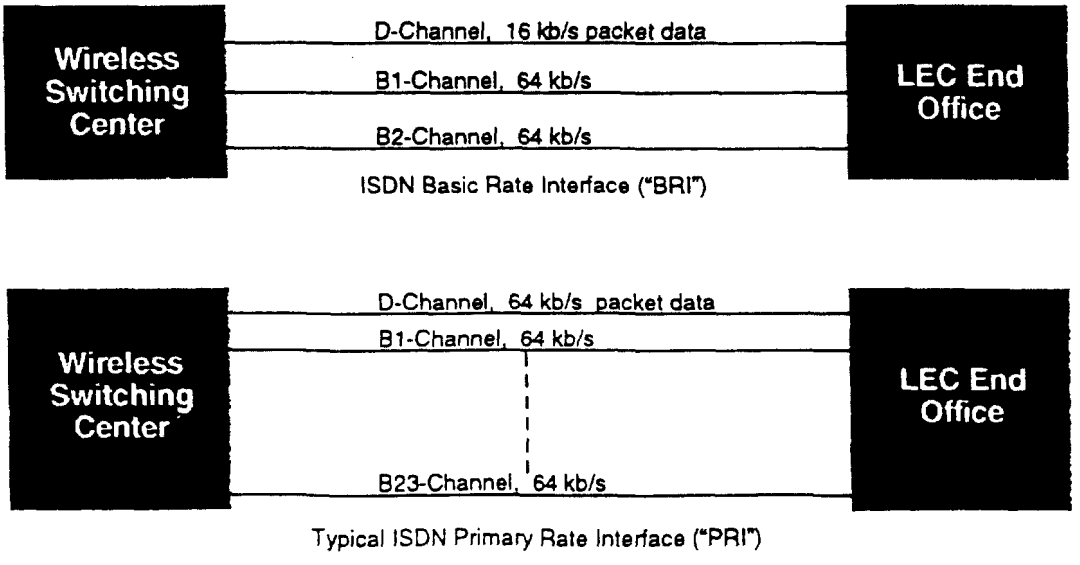

2. Interconnection Types

a. Description of Type 1 and Type 2 Variations

Type 1 Interconnection. As shown in Diagram 3, Type 1 interconnection is a line-side connection through a LEC end-office, where the LEC performs the switching of incoming and outgoing calls for the wireless network. From a call-routing perspective, Type 1 is similar to the interconnection a private branch exchange (PBX). From a signalling perspective, however, calls in a Type 1 interconnection differ from PBX interconnection because they use multi-frequency ("MF") trunk signaling protocols. Special software, known as Trunk with Line Treatment ("TWLT"), allows the LEC switch to process calls from a CMRS provider as if they were from a standard line-side connection. This type of interconnection supports connections between a mobile carrier and the LEC, LEC directory and operator assistance, and services provided by IXCs and other CMRS providers and LECs.

Type 1 Interconnection Variations for ISDN. A Type 1 Variation interface has been defined for ISDN. A Type 1 Variation interface is available for ISDN-BRI and ISDN-PRI. The Type 1 Variation based on ISDN-BRI is a "2B + D" interface with a 16 kbps D-channel. The Type 1 Variation for PRI consists of one or more DS1 time division multiplexed signals. Each DS1 facility supports 24 bi-directional, symmetric digital channels. The PRI has one D-channel and numerous B-channels. The D-channel supports a 64 kbs signaling rate in each direction and has a message-oriented protocol to support call control signaling. Each B-channel supports 64 kbs transfer rates in each direction. A typical Type 1 Variation for PRI consists of a single DS1 facility configured as a "23B+D" interface. Note, however, that a PRI can support fewer than 23 B-channels, since a CMRS provider may subscribe to less than full DS1 PRI. As discussed above, it can also support as many as 479 B-channels, since a single D-channel may control as many as twenty DS1 facilities.

Diagram 3: LEC Interconnection Configurations

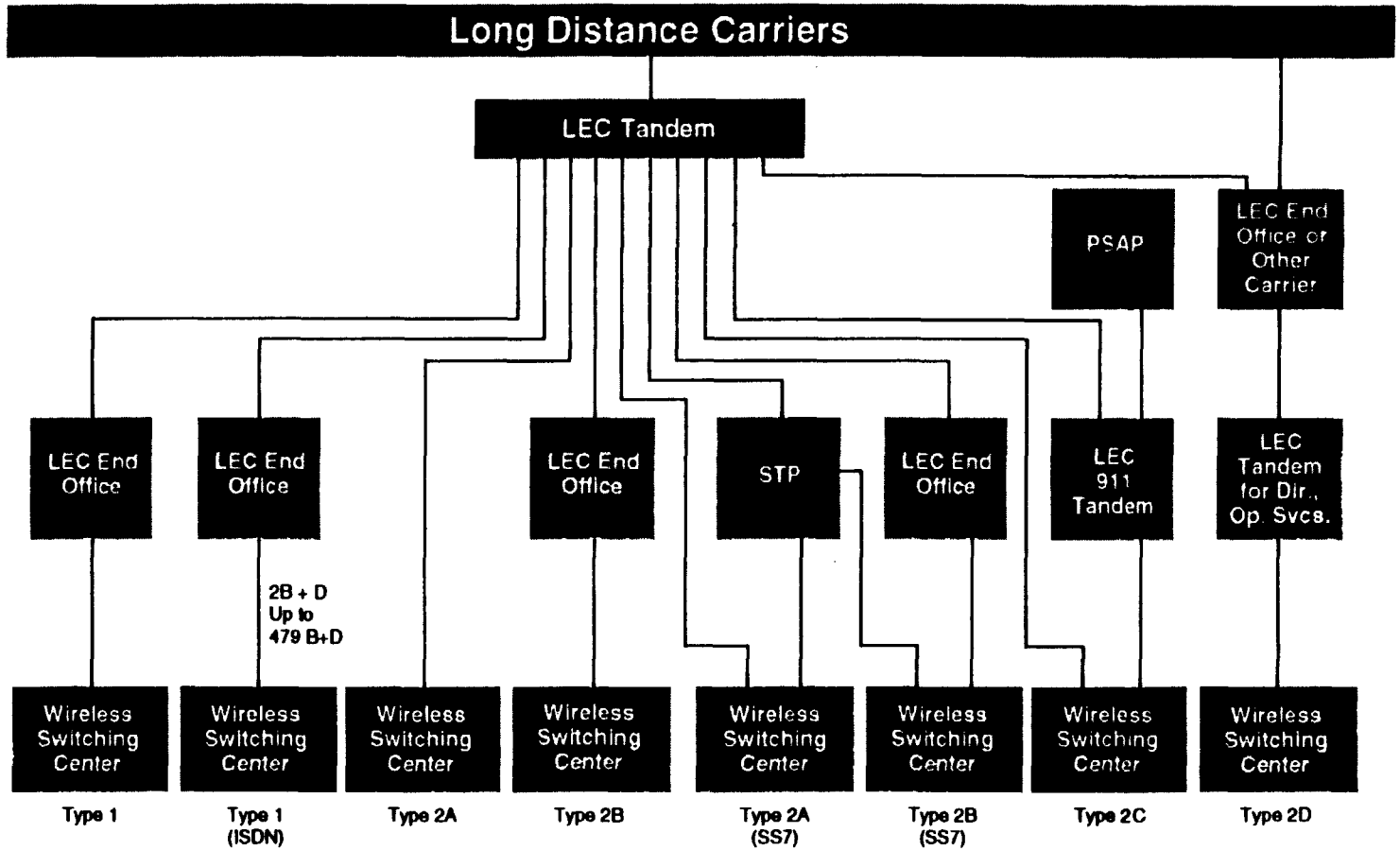

Type 2A Interconnection. Type 2A interconnection provides a direct connection to a LEC tandem switch similar to the arrangements used by the LEC's own end-offices. Under Type 2 interconnection, the CMRS provider owns the switch serving the wireless network, enabling it to originate outgoing calls and to terminate incoming calls. Calls through a Type 2A interconnection are handled using inband MF trunk signaling and trunk address signaling protocols.

Type 2A Interconnection Variations for SS7. A variation of the Type 2A interface may be arranged using SS7-supported trunks. This type of interface is called a Type 2A with SS7 interface. The Type S interface, discussed below, must be used with a Type 2A interconnection to implement this Type 2A variation. This interface type supports the trunk circuit connection between a LEC tandem and a CMRS switch. Among the capabilities beyond those supported by Type 2A without SS7 is the inclusion of the calling party number in the call set-up signaling.

Type 2B Interconnection. A Type 2B interconnection is a direct connection with a specific LEC end-office. Under Type 2B interconnection, like Type 2A interconnection, the CMRS providers switch originates outgoing calls and terminates incoming calls. Type 2B interconnection is utilized only for interconnection with telephone numbers served by the specific end-office to which it is connected. It is generally used in conjunction with Type 2A tandem interconnection to provide high-volume alternate routing for traffic between the CMRS switch and a specific LEC end office.

Type 2B Interconnection Variations for SS7. A Type 2B interface may be arranged using SS7-supported trunks. This variation is called Type 2B with SS7 interface. The Type S interface, discussed below, supports the SS7 signaling link connection between a LEC Signal Transfer Point and a CMRS provider. The addition of the SS7 link to Type 2B interconnection allows for some additional capabilities, but to a more limited extent than the Type 2A with SS7 interface. For example, applications that require calls to be tandemed, such as

operator services and 800 call setup, may be used over a Type 2A with SS7 interface. They may not be used over a Type 2B with SS7 interface.

Type 2C Interconnection. Type 2C interconnection is used to connect wireless-subscriber-originated 911 calls through a LEC network to emergency services providers. At present, the mobile nature of wireless subscribers precludes their 911 calls from being readily adaptable to existing emergency services networks. In addition, 911 specifications and requirements vary from LEC to LEC, and the CMRS service areas and the emergency service provider's service boundaries may not overlap, requiring negotiation of a single way to route 911 calls from wireless subscribers. It should be noted that interconnection of a CMRS provider through a LEC to an emergency services provider currently is not compatible with enhanced 911 (E911) services, since the wireless network does not pass Automatic Location Identification. For these reasons, an agreement must be reached between the wireless carrier and the local agency responsible for 911 calls before such calls from wireless subscribers can be accepted. The FCC has initiated a proceeding to promote the compatibility of mobile networks and E911 systems.

Type 2D Interconnection. Type 2D interconnection provides the physical connection for a voice-grade interface to a LEC Operator Services System (OSS) switch. A LEC OSS switch is a tandem switch that provides operator services call processing capabilities. Operator services include alternate billing services, directory assistance services and general assistance services. There are three signaling protocols that support calls carried over a Type 2D interface. Two are in-band MF protocols that travel over the Type 2D interface. The third is an out-of-band protocol carried over a Type S interface. Type 2D with SS7 interface and Type 2A with SS7 interface both support operator services. The difference is that Type 2D with SS7 is dedicated solely for operator services, while Type 2A with SS7 may be used for many other purposes, such as call setup and 800 call setup. The three available signaling protocols mentioned above are not compatible. Furthermore, not all signaling options are available at all locations. The signaling arrangements, as

well as the nature and range of operator services, must be negotiated by the LEC and the CMRS provider.

Type S Interconnection. Type S interconnection is a physical SS7 signaling link connection between a LEC network and a CMRS network. It connects to the common signaling channel. The "S" stands for signaling information. The interface does not, by itself, include any applications. An "application," for the purposes of this discussion, refers to SS7-specific functions or services that are provided by a LEC for a CMRS provider, or vice versa. The Type S interconnection must be used in conjunction with the Type 2A with SS7 interface or the Type 2B with SS7 interface in order to set up and release a trunk connection for a call. Because each LEC does not support the same set of applications, the applications to be supported at a Type S interface must be arranged between the LEC and the CMRS provider.

b. Practical Differences Between Type 1 and Type 2 Interconnection

Among the differences between Type 1 and Type 2 interconnection is that a transmission to a Type 1-connected CMRS provider normally will require an extra switching point in the wireline network. Type 2 interconnection, in contrast, may eliminate the need for a LEC switch in the interconnection path, reduce the cost of interconnection, and provide better quality for customers.[2]

A second, related difference between Type 1 and 2 interconnection is that under Type 1 service, the LEC performs the switching function for both outgoing mobile calls and incoming calls to mobile subscribers. A Type 2-connected wireless carrier can perform its own switching of outgoing and incoming calls. Accordingly, as discussed below, Type 2 interconnection gives rise to a "mutual compensation" obligation under the FCC's rules. That is, the LEC and the CMRS

---

[2] Although a switching point is always saved on an interLATA call, this may not be the case for local calls. For some local calls, Type 2 may even add a switching point.

provider are to be compensated for terminating calls that originate on the other's network.

A third difference is that Type 2 interconnection makes it easier for the wireless service provider to customize the architecture of its switch. Type 1 interconnection must conform to the standard class 5 switch, which could potentially be less efficient for mobile applications. For example, Type 1 interconnection could seriously restrict SS7-based applications for a wireless carrier. Additionally, a wireless provider with Type 2 interconnection need not purchase ancillary services, such as operator assistance, which are tied into Type 1 service

B. Telephone Numbers

The second essential element of interconnection, beyond the physical link into the PSTN, is telephone numbers for assignment to CMRS subscribers. Traditionally, most numbering resources have been assigned by the dominant landline LEC in each service area.[3] In most of the country, this entity is the local BOC. In some areas (Hawaii and parts of Florida and California), GTE is the local number administrator.[4]

CMRS providers taking Type 1 interconnection typically obtain blocks of numbers from within a central office code (also known as an NXX code), although Type 1-interconnected carriers also may obtain entire NXX codes. The LECs generally make numbers available in blocks of 100, and impose both an initial charge to recover the costs of assignment and a recurring monthly charge per number. Charges vary considerably from LEC to LEC.[5]

CMRS providers taking Type 2 interconnection must take entire NXX codes (each NXX

---

[3] The North American Numbering Plan Administrator, an organization currently within Bellcore, is responsible for assigning NXXs within service access codes (such as 800 and 900) and the 809 area code (covering the Caribbean).

[4] As discussed below, the Commission has proposed to centralize administration of the North American Numbering Plan, including responsibility for assigning telephone numbers, in a single, disinterested entity.

[5] In California, for example, GTE has proposed a non-recurring charge of 90 dollars per block of 100 numbers and a recurring charge of 16 dollars per month. Pacific Bell, in contrast, has proposed to charge 250 dollars for the first block of 100 numbers, 64 dollars for additional blocks, and 41 cents per number per month.

code is associated with 10,000 line numbers), since each NXX code is identified with a particular switch.[6] As with number blocks, charges for NXX codes vary greatly.[7] As discussed below, however, FCC policies prohibit LECs from imposing recurring charges for NXX codes used by Type 2-interconnected CMRS providers, and non-recurring charges must be reasonable.

In response to concerns expressed by wireless carriers that code assignment procedures differ significantly both among LECs and between regions served by an individual LEC, the FCC has directed the industry to develop standard central office code administration guidelines. A group within the Industry Carrier Compatibility Forum ("ICCF") is finalizing the guidelines, which set forth eligibility criteria for obtaining NXX codes, assignment principles, a standard time interval for responding to code requests (10 working days),[8] and code conservation principles, and address other relevant matters. The guidelines also contain a standard form that may be used to request NXX codes from any LEC.[9]

Many CMRS providers have grown increasingly concerned that the continuing assignment of NXX codes by LECs to their competitors — and the related responsibility of planning for code exhaust and relief within area codes — creates an inherent conflict of interest. Recently, for example, many wireless carriers have contended that "overlay"[10] relief plans proposed by some

---

[6] In a few cases, NXX codes are shared between MTSOS and LEC and offices. Such sharing creates billing and other problems, however, and generally is not desirable.

[7] GTE has proposed to charge $11,950 for establishment of NXX codes for CMRS providers in California. Pacific Bell has proposed different charges in each NPA within California, ranging from $9400 to $29,800. In addition, Pacific Bell has proposed to charge $41.00 per month for NXX codes used by Type 1-interconnected carriers.

[8] The standard period for activating an NXX code is 105 days after request.

[9] A copy of the current draft of the guidelines, with the standard code request form, is attached at Appendix A to this handbook.

[10] An overlay code is a new area code with the same boundaries as one or more existing area codes. In New York City, for example, the 917 area code overlays the 212 area code, but it is used principally for mobile services. The alternative to an overlay, and the traditional means of addressing code exhaust, is a geographic split. Under this approach, an area previously served by one area code is divided so that part of the area retains the old code and the rest is assigned a new code. This approach also creates burdens for many mobile carriers. Most notably, cellular carriers must have each subscriber's telephone re-programmed with the new area code.

LECs to address NXX code exhaust would place wireless carriers at a serious competitive disadvantage. For example, some of these relief plans would require wireless service providers to give up numbers within the existing area code for use by subscribers to the landline LEC. They also would create a lengthy period of dialing disparity, during which mobile customers have to dial 10 digits to reach most local numbers, while landline customers may dial only 7 digits.[11]

In light of concerns over the administration of the North American Numbering Plan by the BOCs (which themselves need numbering resources to provide service) and Bellcore (which is owned by the BOCs), the FCC has proposed to transfer responsibility for code assignments, relief planning, and numbering policy development to a disinterested third party. PCIA and many other parties strongly supported this proposal. Action by the Commission is expected in early 1995.

Finally, CMRS providers should be aware of new "non-geographic" numbering resources that may be useful in providing personal numbering-type services. Traditional telephone numbers are considered geographic because the NPA corresponds to a particular territory and the NXX code specifies a switch within that territory. Non-geographic numbers, in contrast, are not tied to a particular location. A user assigned such a number may, theoretically, be reached at that number anywhere, through the use of location data bases and other technical means. Accordingly, these numbers provide a form of physical number portability, and when usable across different networks, non-geographic numbers will support "one-person, one-number" type services.

---

[11] CMRS providers should be aware that, as of January 1995, area codes will no longer need to use "0" or "1" as the middle digit. For example, a new 630 area code will be used in Illinois, a 360 code in Washington, and a 334 code in Alabama. The new format, known as interchangeable NPAs, or "INPAs," is necessary because no more area codes are available in the traditional N0/1X format. Some LECs have blamed wireless carriers for the rapid exhaust of numbers. PCIA believes, however, that growth of both wireline and wireless services, as well as the tremendous installed base of wireline numbers, together account for the exhaust of numbers within traditional area codes.

In mid-1994, Bellcore began assigning non-geographic NXXs within the 500 service access code "SAC" for the provision of personal communications services.[12] Numerous service providers already have obtained 500-NXX codes, and consequently, the industry is considering how to provide relief when 500 numbers exhaust. There is agreement to assign 533 as the next service access code for personal communications services, followed by 544, 566, 577, and 588.

---

[12] The category of personal communications services eligible for assignment of 500 NXXs generally is broader than the FCC's definition of Personal Communications Services. To be eligible for a 500 NXX code, a carrier must offer a service that includes some combination of geographic mobility, personal mobility, and user profile management (which will likely require a data base that contains information about the subscriber's service options).

CHAPTER II: INTERCONNECTION RIGHTS OF CMRS PROVIDERS

A. The FCC's Mobile Interconnection Policies Prior to the *Regulatory Parity Decision*

The ability of wireless carriers to obtain economically and technically reasonable interconnection to the landline telephone network has been a source of controversy ever since the FCC first allocated frequencies for a "non-wireline" mobile radio service.[13] (Wireline mobile services are those provided by the landline LEC or its affiliate; non-wireline mobile services are those provided by an entity that is unaffiliated with the local telephone company.) The sections below describe the evolution of the FCC's mobile radio interconnection policies. These policies provide the framework for understanding the current interconnection rights of CMRS providers.

1. The *Guardband* Decision

In the landmark 1968 *Guardband* decision,[14] the FCC exercised its statutory jurisdiction over interconnection matters and established specific interconnection obligations that wireline carriers owe non-wireline carriers. Relying on the "essential facilities doctrine,"[15] the FCC held that a LEC must:

> offer to make available to the nonwireline common carriers for one-way signaling purposes the same dial access interconnection facilities as those utilized by the wireline common carriers in the community; further, that the charges for such interconnection, and all other facilities of the wireline company used by the nonwireline carriers in the one-way signaling service...shall be identical with those costs used by a wireline company...and, finally, if a wireline carrier offers or purports to offer any free or reduced rate service in connection with its one-way signaling service, it shall provide the identical service so offered or purported to be

---

[13] *See* General Mobile Radio Service, 13 F.C.C. 1190, *recon. denied*, 13 F.C.C. 1242 (1949).

[14] Allocation of Frequencies in 150.8 - 162 Mc/S Band, 12 F.C.C.2d 841 (1968), *recon. denied*, 14 F.C.C.2d 269, *aff'd sub nom.*, Radio Relay Corp. v. FCC, 409 F.2d 269 (2nd Cir. 1969) ("Guardband").

[15] The "essential facilities doctrine" requires parties controlling a facility that would be infeasible to duplicate, such as the local wireline network, to make that facility available to competitors at non-discriminatory terms.

offered to customers of any competing nonwireline carrier at the same reduced rate or free of charge.[16]

The FCC further emphasized in *Guardband* that its new policy was intended to prevent unfair competitive practices and secure competitive equality between wireline and non-wireline carriers.[17] Although the *Guardband* decision dealt only with the ability of paging services to obtain interconnection, the FCC later expanded the ruling to encompass conventional two-way mobile radio services.[18]

The principle established in the *Guardband* decision — that wireline telephone companies must interconnect with radio common carriers on a non-discriminatory basis — is today a well-established legal requirement. As a federal court of appeals noted in the 1985 case of *Rogers Radio Communications Services, Inc. v. FCC*, "[u]nder *Guardband's* authoritative construction of §201(a), a telephone company must make available to nonwireline carriers either the same type of service utilized by the telephone company itself (or its affiliates) or a similar service at the same price charged to other nonwireline carriers."[19]

2. 1976 and 1980 Memoranda of Understanding

Despite the clear directive of the *Guardband* decision, non-wireline carriers continued to experience difficulties in securing non-discriminatory interconnection from wireline carriers. In 1976, the FCC initiated a series of informal meetings between the major wireline telephone companies and the National Association of Radio Telephone Systems (one of PCIA's

---

16 12 F.C.C.2d at 852.

17 *Id.* at 849.

18 *See* Mobile Marine Radio, Inc. v. South Central Bell, 63 F.C.C.2d 266 (1977).

19 751 F.2d 408, 413 (D.C. Cir. 1985).

predecessors) to address interconnection problems and more effectively implement its *Guardband* policies.[20]

Subsequent to this meeting, the radio common carriers ("RCCs") and wireline telephone companies negotiated a Memorandum of Understanding ("MOU"). The 1976 MOU included a statement of mutually acceptable interconnection principles as well as a model inter-carrier agreement. The FCC accepted the MOU in 1977 as a fair resolution of the major outstanding interconnection problems.[21] The 1976 MOU provided, *inter alia*, that:

- RCCs are entitled to a variety of different interconnection arrangements on reasonable terms and conditions to establish physical connections for the interchange of traffic, and to other facilities an RCC requires for operation of its systems;
- RCCs, except for ordinary administrative use of telephone service, are not to be considered end users of LEC services;
- RCCs are entitled to one-third of all interstate and intrastate toll message charges originating sent-paid from stations, or placed on a received collect basis to stations, on their systems;
- LECs should make available seven digit telephone numbers for each paging device or two-way mobile unit of an RCC subscriber;
- LECs should adopt a paging service plan, the charge for which should be "more related to usage" than previous arrangements, whereby customers could dial a single seven-digit number to access an RCC's paging service;
- LECs must allow resale of their intrastate INWATS service by RCCs' paging operations, to the extent such resale is consistent with state tariff requirements.

Although the 1976 MOU expired on January 31, 1980, it was extended until July 31, 1980, so that a new agreement could be negotiated. The new agreement, which the FCC accepted in October, 1980, basically continued the terms of the 1976 MOU and added two important new provisions. First, operating telephone companies agreed to lower their rates for central office

---

[20] As noted by the Commission, those problems included "RCC status as common carriers; reasonable interconnection terms and conditions by [wirelines] on reasonable requests by RCCs; form of transmission over radio transmitter links; availability of seven digit telephone numbers and charges therefor; effective liaison arrangements; elimination of maintenance charges; directory listing practices; rationalization of end user taxes; a plan for single-number access to one-way signaling systems, related to usage; resale of INWATS service; compensation to RCCs for handling toll traffic and continued recognition of new technology and innovations." Interconnection Between Wireline Telephone Carriers and Radio Common Carriers, 63 F.C.C.2d 87, 89 (1977).

[21] *Id.*

numbers in recognition of the short duration of paging calls. Second, AT&T agreed to implement a Single Number Access Plan, under which mobile radio carriers offering wide-area paging services that transcended operating companies' exchange area boundaries could provide service with one paging number.[22]

By the time the 1980 MOU was adopted, the *Guardband* principles had become fairly well-established. RCCs were officially deemed to be co-carriers, not end users; they were provided with blocks of central office numbers; they were entitled to a share of the revenues from toll calls originating on their systems; and the technical and economic parameters of non-discriminatory interconnection with wirelines were well-defined. These principles set the foundation for a truly competitive mobile services marketplace.

3. Divestiture and the 1986 Policy Statement

AT&T's divestiture of the local Bell Operating Companies ("BOCs") on January 1, 1984 disrupted the stability that had been created by the MOUs. The compensation scheme that had been used to reimburse the BOCs for originating and terminating AT&T's interstate long distance traffic was rejected by the Modified Final Judgement ("MFJ")[23] that settled the government's antitrust suit against AT&T. That scheme was replaced by a system of "access charge" tariffs that the divested operating companies applied to all interexchange carriers.[24]

Adoption of the FCC's "access charge" plan led some exchange carriers to refuse to renew the 1980 MOU. These carriers contended that the MFJ required that RCC interconnection facilities be subject to the new access tariffs. A special access category known as "Feature Group E" was

---

[22] *See* Interconnection Between Wireline Telephone Carriers and Radio Common Carriers, 80 F.C.C.2d 352 (1980).

[23] United States v. American Telephone & Telegraph Company, 552 F. Supp. 131, 227-228 (D.D.C. 1982), *aff'd mem. sub nom.* Maryland v. United States, 460 U.S. 1001 (1983).

[24] *See* MTS/WATS Market Structure, 93 F.C.C.2d 241, *recon.*, 97 F.C.C.2d 682 (1983), *second recon.*, 97 F.C.C.2d 834 (1984), *aff'd and remanded in part*, National Ass'n of Regulatory Util. Comm'rs v. FCC, 737 F.2d 1095