created expressly for that purpose. PCIA's predecessor (Telocator) vigorously opposed these proposals before the FCC and prevailed:

> When we adopted Part 69 to govern access charges for interstate and foreign access services, we did not intend . . . to require that the preexisting intercarrier agreements between RCCs and telephone companies be replaced by access tariffs.[25]

Moreover, the Commission reiterated that RCCs were not to be treated as end users or interexchange carriers under its access plan. The Commission explained that

> RCCs provide 'exchange service' under Sections 2(b) and 221(b) of the Communications Act, and we have consistently treated mobile radio services provided by RCCs and telephone companies as local in nature . . . . Furthermore, mobile radio services are provided by divested BOCs under the MFJ and are specifically defined as 'exchange telecommunications services' for that purpose.[26]

After the Commission ruled in 1984 that end user and interexchange carrier access charges did not apply to RCC interconnection facilities, the RCC industry sought to enter into new inter-carrier agreements modeled after the 1980 MOU. This effort met with limited success because some wireline carriers refused to negotiate and instead subjected the RCCs to unilateral (and disadvantageous) tariff provisions. Other wireline carriers were willing to negotiate but the process stalled, leaving many RCCs without valid interconnection agreements and at the mercy of wireline carriers.

Due to this instability, in 1985, PCIA's predecessor, Telocator, petitioned the FCC to adopt a new set of interconnection principles to provide guidance to carriers in negotiating replacement interconnection contracts for paging, conventional two-way, and cellular mobile radio services. Telocator also requested the FCC to appoint an "ombudsman" to handle interconnection disputes.

Although the Commission decided that an ombudsman was not necessary, it did agree that firm directives were needed to ensure that wireline carriers understood their interconnection

---

(D.C. Cir. 1984), *cert. denied*, 105 S. Ct. 1224, *third recon.*, 101 F.C.C.2d 1222 (1985).

[25] MTS/WATS Market Structure, 97 F.C.C.2d at 881-82.

responsibilities in the post-divestiture environment. Accordingly, the FCC issued a *Policy Statement* that established the following ground rules:

- Mobile radio licensees under Part 22 are to be treated as co-carriers, not end users.
- Mobile radio licensees should not generally be subject to interstate access charges because they are local exchange service providers.
- Telephone companies must offer non-wireline carriers, at a minimum, a form of interconnection no less favorable then that furnished to their own mobile affiliate, or satisfy any other form of reasonable interconnection arrangement requested by a non-wireline carrier.
- Wireline carriers do not own NXX codes or telephone numbers, and therefore, may not impose recurring charges solely for their use. They may, however, assess an initial connection charge to compensate the telephone company for programming its switching software.
- Compensation arrangements between mobile radio and wireline carriers for interchanging traffic are mostly matters of state, not federal, concern.[27]

As part of its *Policy Statement*, the FCC also ordered that inter-carrier contracts be executed as quickly as possible and required that Telocator submit a progress report six months later.

4. The 1987 Interconnection Declaratory Ruling

The progress report submitted by Telocator in late 1986 revealed that further FCC involvement was necessary to achieve equal interconnection to the landline network. As stated by the FCC, the negotiations:

> thus far only have been partially successful. This is due in part to the technical and economic complexities of this subject matter, the intricacies of a bifurcated jurisdictional scheme in regulating these services, and the emotionally-charged atmosphere that some parties are bringing to the negotiation table.[28]

---

[26] *Id.* at 882 (citation omitted).

[27] The Need to Promote Competition and Efficient Use of Spectrum for Radio Common Carrier Services, 59 Rad. Reg. 2d (P&F) 1275 (1986) ("Policy Statement").

[28] The Need to Promote Competition and Efficient Use of Spectrum for Radio Common Carrier Services, 2 FCC Rcd 2910, 2911 (1987) ("Interconnection Declaratory Ruling"). *aff'd on recon.*, 4 FCC Rcd 2369 (1989).

To expedite matters, remove uncertainty from the negotiation process, and refine its basic interconnection policies, the Commission issued the 1987 *Interconnection Declaratory Ruling*. This decision resolved jurisdictional questions and established substantive interconnection rights. As clarified and affirmed on reconsideration, the *Interconnection Declaration Ruling* established the following interconnection framework:

a. Federal/State Jurisdiction

During interconnection negotiations, some telephone companies had questioned the FCC's authority to regulate the provision of interconnection facilities and services to non-wireline carriers. These companies maintained that because such arrangements were used primarily for local or intrastate communications, the Commission had no legal basis to dictate the terms and conditions of interconnection. Negotiations sometimes reached an impasse because of this jurisdictional dispute.

To remove ambiguity about its authority and the legal obligation of wireline carriers to comply with its policies, the FCC carefully reviewed the scope of its jurisdiction. It explained that Congress's enactment of the Communications Act of 1934 gave the FCC the power to regulate interstate communications and left the states with authority over intrastate communications. The Commission further held that when wireline facilities are used for *both* interstate and intrastate purposes, and it is not feasible to separately regulate the uses, the facilities are subject to federal rather than state jurisdiction.[29] Applying this preemption principle to interconnection, the FCC noted that the physical interconnections between cellular and landline carriers are used to make both interstate and intrastate calls. Moreover, the Commission found that it would be infeasible to require one set of trunk lines and equipment for intrastate calls and another for interstate calls.

---

[29] *See* Louisiana Public Service Comm'n. v. FCC, 476 U.S. 355 (1986).

Hence, the Commission concluded that it had complete authority over the physical interconnections between cellular and landline carriers.

Similarly, the Commission found that it had plenary jurisdiction over the allocation of NXX codes. Like physical plant, NXX codes are used to make both intrastate and interstate calls. Moreover, as a matter of engineering, the Commission noted that it was likely infeasible to separate NXX codes for intrastate calls from codes for interstate calls.

The Commission also concluded that it had authority to require good faith negotiations regarding interconnection. In reaching this conclusion, the Commission found that the conduct of interconnection negotiations could not be separated into interstate and intrastate components. In addition, the Commission held that because a wireline carrier may exhibit anticompetitive conduct by causing delays in the negotiating process, its authority to mandate good faith negotiations was also derived from its duty to remedy anticompetitive conduct.

At the same time, however, the Commission clarified that some aspects of mobile radio interconnection are properly left to state regulation. Those items include: (1) the costs (and ultimately the price) of interconnection facilities allocated to the intrastate jurisdiction, (2) the intrastate costs associated with the assignment of NXX codes, and (3) intrastate switching costs. Even then, the FCC cautioned that if wireline carriers charge unreasonably high intrastate rates that effectively would exclude competitors from accessing the nationwide public network, federal rather than state regulation would be warranted.[30]

b. Specific Interconnection Rights

After resolving the jurisdictional issues, the Commission addressed the substantive interconnection rights of mobile common carriers. These rights, which are summarized in the chart on the next page, include reasonable and non-discriminatory interconnection (which

---

[30] Interconnection Declaratory Ruling, 2 FCC Rcd at 2912.

encompasses both timely satisfaction of interconnection requests and cost-based charges for interstate services and facilities), the assignment of NXX codes, mutual compensation, and good faith negotiations.

CHART I:

SUMMARY OF INTERCONNECTION RIGHTS

Reasonable Interconnection:

- Wireline carriers may not refuse to provide any form of interconnection reasonably requested by a mobile common carrier.
- Interconnection must generally be provided within six months from the date of request.
- Interstate interconnection charges must be cost-based.

Assignment Of NXX Codes:

- Wireline carriers cannot charge recurring fees for the use of NXX codes by Type 2-connected carriers.
- The interstate charges for opening NXX codes must be cost-based.
- Telephone companies cannot reclaim a disproportionate share of needed numbers from a mobile service competitor.

Mutual Switching Compensation:

- LECs must compensate CMRS providers for the reasonable costs incurred in terminating traffic that originates on LEC facilities.

Good Faith Negotiations:

- Mobile radio interconnection agreements must be negotiated in good faith.

(1) Reasonable Interconnection

The *Interconnection Declaratory Ruling* established a "reasonable interconnection standard." Under this standard, a wireline carrier may not refuse to provide any form of interconnection reasonably requested by a mobile common carrier, including Type 2 interconnection (which several LECs previously had resisted providing).

The Commission also stated that "reasonable interconnection" requires the LECs to satisfy requests within a reasonable time. Specifically, the Commission held that interconnection must be provided within six months from the date of request. LECs bear the burden of explaining any delays that extend longer than six months.

The *Interconnection Declaratory Ruling* also mandated that interstate interconnection charges be cost-based. For example, "when it is less expensive to the landline carrier to provide Type 2 facilities (as opposed to Type 1 facilities), charges should be lower for Type 2 service."[31] The Commission also noted that "it appears logical that in most circumstances it should be less expensive to provide Type 2 than Type 1 interconnection service," because a Type 2 arrangement employs fewer switching facilities and does not include certain supplementary services.[32] On reconsideration, the FCC further explained that "our statements that Type 2 interconnection should generally be less expensive were intended as a reminder to carriers, not only that Type 2 should be made available to cellular carriers, but also that Type 2 should be offered at reasonable rates."[33]

(2) Assignment of NXX Codes

The *Interconnection Declaratory Ruling* also addressed the assignment of NXX codes and telephone numbers. Prior to the 1986 *Policy Statement*, it had become standard practice for

---

[31] *Id.* at 2914.

[32] *Id.* On September 15, 1987, the Missouri Public Service Commission came to the same conclusion in rejecting Southwestern Bell's RCC Interconnection tariff. *See* CyberTel Cellular Tel. Co. v. Southwestern Bell Tel. Co., Case No. TC-86-158, released September 15, 1987.

wireline carriers to assess a monthly recurring charge for the use of NXX codes assigned to mobile common carriers. In its *Policy Statement*, the FCC sought to terminate this practice by clarifying that wireline carriers do not own NXX codes and that they therefore have no right to charge recurring fees for the use of those numbers. The *Policy Statement* also made clear that wireline carriers must accommodate the reasonable numbering requirements of RCCs. At the same time, the FCC allowed telephone companies to assess a reasonable "initial connection charge" to recover the costs of making software changes necessary for their central office switches to handle the codes allocated to a mobile radio carrier.

The *Interconnection Declaratory Ruling* refined the FCC's policies on the assignment of NXX codes and telephone numbers in two respects. First, the Commission stressed that the *interstate* charges for opening NXX codes must be cost-based. Because the total cost of allocating NXX codes can be separated between interstate and intrastate uses, the FCC reserved to the states any price regulation associated with the intrastate aspects of assigning NXX codes.

Second, the FCC established a policy for reclaiming NXX codes. Allowing telephone companies to reclaim a disproportionate share of needed numbers from an RCC competitor creates risks of competitive harm. Accordingly, the Commission announced that telephone companies should "reclaim from all other carriers based upon such factors as their respective growth requirements and unused surpluses," thereby promoting the most efficient allocation of the shared resource.[34]

(3) Mutual Switching Compensation

When a landline telephone call originates in the franchise area of one LEC and terminates in the territory of another (*e.g.*, from GTE to Pacific Bell in metropolitan Los Angeles), the revenue from that call is divided to compensate each carrier for its costs in switching and

---

[33] 4 FCC Rcd at 2374.

transmitting the message. In the Interconnection Declaratory Ruling, the FCC applied this principle of "mutual compensation" to mobile common carriers that switch traffic for LECs,[35] holding that "[c]ellular carriers and telephone companies are equally entitled to just and reasonable compensation for the provision of access, whether through tariff or by a division of revenues agreement."[36] The Commission explicitly rejected arguments that mobile radio carriers are not true co-carriers for this purpose.[37] It also dismissed as irrelevant LEC arguments that cellular operators could recover their switching costs from subscribers,[38] and strongly reminded LECs of its "longstanding policy that a cellular system operator is a common carrier, not a customer or end user."

Despite the Commission's endorsement of mutual compensation, wireline carriers have resisted paying compensation to mobile service providers for terminating landline-originating traffic. Indeed, very few (if any) cellular carriers have succeeded in entering mutual compensation agreements for either interstate or intrastate traffic — and some LECs have gone so far as to charge cellular carriers originating access charges when handing off calls for termination on the cellular network. The mutual compensation issue assuredly will remain a point of contention in LEC/PCS negotiations, even though, as discussed below, the FCC has reaffirmed that mutual compensation is required, not optional.

(4) Good Faith Negotiations

In the *Interconnection Declaratory Ruling*, the Commission re-examined and reinforced the good faith negotiation requirement of the 1986 *Policy Statement*. The *Policy Statement* had sought

---

[34] Interconnection Declaratory Ruling, 2 FCC Rcd at 2915.

[35] Because mutual compensation applies only when a non-wireline carrier actually switches traffic, the principles of mutual switching compensation apply to Type 2 interconnection only.

[36] Interconnection Declaratory Ruling, 2 FCC Rcd at 2915-16.

[37] *Id.* at 2916; *see also* 4 FCC Rcd at 2373.

to minimize delays in negotiations for inter-carrier contracts by requiring that mobile radio interconnections be negotiated in good faith. However, some wireline carriers continued to frustrate the negotiation process by unilaterally filing interconnection tariffs. Accordingly, the FCC emphasized in the *Interconnection Declaratory Ruling* that "tariffs reflecting charges to cellular carriers will be filed only after the co-carriers have negotiated agreements on interconnection,"[39] and that such agreements should be concluded without delay.

On reconsideration, the Commission clarified that a LEC could file a tariff on uncontested issues, but could not include issues upon which agreement had not yet been reached.[40] It also re-affirmed that it has plenary authority over issues of good faith,[41] and that interconnection should be furnished within six months after the initial request.[42]

B. The Regulatory Parity Decision

In order to bring consistency to the regulatory treatment imposed upon different classes of mobile carriers, the 1993 Budget Act created a new category of "commercial mobile services."[43] In a decision issued in March 1994, the Commission implemented this regulatory parity directive by extending the rights established in the *Interconnection Declaratory Ruling* to all CMRS providers.[44] It also restated and clarified those rights in certain respects, as discussed below.

---

[38] 4 FCC Rcd at 2373.

[39] *Id.*

[40] *Id.* at 2371.

[41] *Id.* at 2371-72.

[42] *Id.* at 2374.

[43] Section 6002 of the Omnibus Budget Reconciliation Act of 1993, 107 Stat. 387 (1993); *see* 47 U.S.C. §§153(n), 332.

[44] Implementation of Sections 3(n) and 332 of the Communications Act, 9 FCC Rcd 1411 ("Regulatory Parity Order").

1. Interconnection Defined

For a mobile service to be considered a CMRS, it must make "interconnected service" available to end users.[45] An "interconnected service" is "any mobile service that is interconnected with the public switched network, or service for which a request for interconnection is pending, that allows subscribers to send or receive messages to or from anywhere on the public switched network."[46] The Commission defined "interconnected" as "a direct or indirect connection through automatic or manual means (either by wire, microwave, or other technologies) to permit the transmission of messages or signals between points in the public switched network and a commercial radio service provider."

2. Extension of the 1987 Interconnection Policies

After defining "interconnection," the Commission reviewed the policies it established in the 1987 *Interconnection Declaratory Ruling* and concluded that there should be no distinction between a LEC's obligation to offer interconnection to Part 22 licensees (such as cellular and common carrier paging providers) and to all other CMRS providers (such as PCS providers and previously private paging carriers). Consequently, it held that "it is in the public interest to require LECs to provide the type of interconnection reasonably requested by all CMRS providers."[47]

In addition, the Commission preempted state and local regulation of the physical interconnection to which CMRS providers are entitled, on the basis that separate interconnection

---

[45] The service also must be offered for profit and available to a substantial position of the general public. *Id.* at 1427-28.

[46] *Id.* at 1434.

[47] *Id.* at 1498. The Commission also considered whether it should require local exchange carriers to interconnect with private mobile radio service ("PMRS") licensees. Although the Commission did not require LECs to interconnect with PMRS licensees, it stated that a PMRS complainant may demonstrate that a common carrier is providing interconnection to CMRS licensees while denying interconnection of the same type and same rate to PMRS licensees. In such cases, the carrier would have to explain why its refusal did not constitute a denial of a reasonable request for service in violation of Section 201(a), establishment of an unreasonable condition of service in violation of Section 201(b), and unreasonable discrimination in violation of Section 202(a).

arrangements for interstate and intrastate CMRS are infeasible. Nonetheless, because LEC costs associated with interconnection for interstate and intrastate cellular services are segregable, the Commission declined to preempt state regulation of LEC interconnection rates.

The FCC then specified the obligations of LECs to provide reasonable interconnection to CMRS providers:

First, the Commission reaffirmed the mutual compensation principle, requiring that LECs compensate CMRS providers for the reasonable costs incurred in terminating traffic that originates on LEC facilities. (CMRS providers, in turn, are required to compensate LECs for mobile-originated traffic that terminates on LEC facilities.)

Perhaps significantly, neither the *Regulatory Parity Order* nor the FCC's implementing rules differentiate between interstate and intrastate traffic. Thus, CMRS providers could take the position that the mutual compensation obligation applies without regard to the jurisdictional nature of the service. Given the historical resistance of the LECs to providing mutual compensation, however, it would be advisable to seek to include specific language regarding this obligation in interconnection agreements, and promptly to involve the FCC if LECs continue to balk at such a provision.

Second, the Commission concluded that LECs must establish reasonable charges for the interstate interconnection that they provide to CMRS licensees. These charges should be identical to charges imposed by the LEC for interconnection provided to other mobile radio service providers. Moreover, in any complaint proceeding against a LEC for charging different rates to different CMRS providers, the LEC must bear the burden of demonstrating that the variance does not constitute unreasonable discrimination.

Third, the Commission held that a LEC may not deny a CMRS provider any form of interconnection arrangement that the LEC makes available to any other carrier or customer unless

the LEC can demonstrate that the requested interconnection arrangement is not technically feasible or economically reasonable.

3. Possible Federal Tariffing of Interconnection Rates.

Traditionally, as noted above, individual LECs and CMRS providers negotiated interconnection agreements that were not filed with the FCC. (Some states, however, required such agreements to be memorialized as tariffs.) Although most cellular and paging carriers believe the current system has worked reasonably well — with the major exception of mutual compensation — some new CMRS entrants are concerned that LECs will not offer interconnection on reasonable, non-discriminatory terms.

To explore this concern, the Commission issued a Further Notice of Proposed Rulemaking in July 1994.[48] That Notice sought comment on whether LECs should have to offer interconnection to CMRS providers under tariff. As one alternative to imposing tariff requirements, the Commission requested comment on supplementing the good faith negotiation requirement with additional safeguards against discrimination, such as mandatory inclusion of a "most favored customer" clause in all interconnection agreements. It also asked whether filing of individually negotiated contracts might be a reasonable alternative to mandating uniform tariffs.

Final action in this proceeding likely will occur in early to mid-1995. In the event the FCC does require federal tariffing of LEC/CMRS interconnection, Appendix B hereto explains the Commission's tariff review process.

---

[48] Equal Access and Interconnection Obligations Pertaining to Commercial Mobile Radio Services, FCC 94-145 (Released July 1, 1994).

CHAPTER III: OTHER INTERCONNECTION RIGHTS

A variety of interconnection rights developed in other FCC proceedings may supplement or complement the rights discussed in Chapters I and II. These other proceedings are reviewed below.

A. Expanded Interconnection for Access Services

Beginning in September 1992, the FCC adopted a series of decisions that sought to promote competition in the access marketplace.[49] (As a general matter, access refers to the use of local exchange carrier or competitive access provider ("CAP") facilities to originate and terminate long distance calls.) Specifically, the Commission ordered the largest LECs to allow third parties to "collocate" transmission equipment in LEC switching offices in order to terminate their own transport facilities. (Transport lines connect LEC central offices to the "Points of Presence" of interexchange carriers.) The FCC also provided that if physical collocation was infeasible, third parties could interconnect through "virtual" collocation, which allows the third party to specify the termination equipment to be placed in the LEC central office, but not to enter the central office to maintain or repair that equipment.

Several BOCs appealed the FCC's collocation decisions to the United States Court of Appeals for the District of Columbia Circuit.[50] The court struck down the Commission's physical collocation requirements, holding that the FCC did not have the authority to order a "taking" of LEC property. The FCC subsequently directed the LECs to offer virtual collocation instead of physical collocation,[51] but that decision also has been appealed.

---

[49] *See* Expanded Interconnection with Local Telephone Company Facilities, 7 FCC Rcd 7369 (1992), *recon.*, 8 FCC Rcd 127 (1992); 8 FCC Rcd 7374 (1993).

[50] *See* Bell Atlantic Telephone Companies v FCC, 24 F.3d 1441 (D.C. Cir. 1994).

[51] Expanded Interconnection with Local Telephone Company Facilities, CC Docket No. 91-141 (released July 25, 1994).

If the FCC's virtual collocation policy is upheld, or if Congress gives the FCC authority to reimpose physical collocation requirements, then CMRS providers with integrated long distance operations may have rights to additional options for interconnection (see Diagram 4). At a minimum, the rates for expanded interconnection, which are tariffed at the FCC, may act as a check on unreasonable rates for mobile interconnection.

Diagram 4:
Comparison of Access Arrangements
Before and After Expanded Interconnection

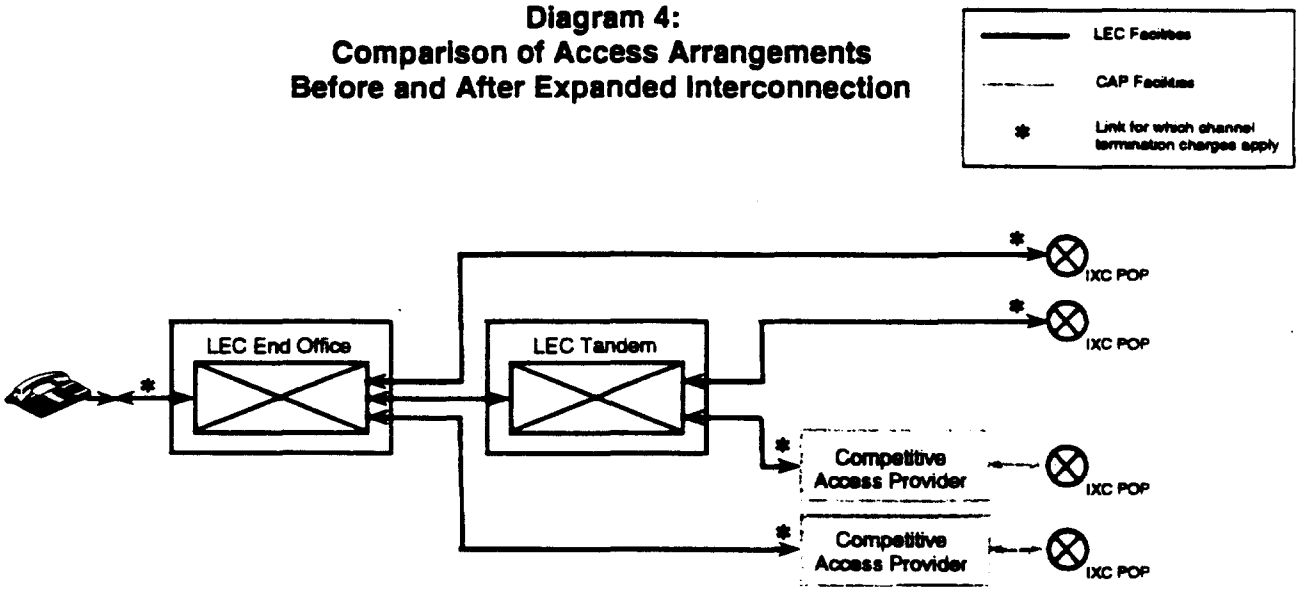

Before the Expanded Interconnection decision, the cost of channel termination charges, noted with *'s, generally rendered bypass for interconnection uneconomic, regardless of the network topology.

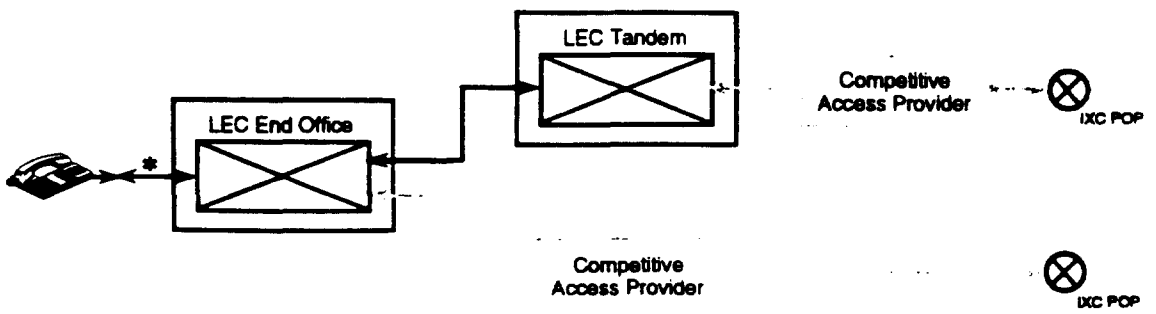

After the Expanded Interconnection decision, competitive access providers have collocation rights that eliminate costly channel termination charges, rendering bypass for interconnection economically feasible.

B. Open Network Architecture Rules and Advanced Intelligent Network Proposals

1. Open Network Architecture

Open Network Architecture ("ONA") is a form of interconnection for enhanced service providers. Enhanced services are offerings that extend beyond the provision of transparent telephone and data transmission services. Examples of enhanced services include voice messaging, information content services such as traffic and weather reports, and protocol processing.

Under ONA, the BOCs and GTE are required to "unbundle" elements of their local exchange and access services that may be useful in providing competitive enhanced services. The unbundled functionalities are called "Basic Service Elements" ("BSEs"). Examples of BSEs that are of potential interest to CMRS providers include call forwarding, access to LEC operations support systems, and a Message Desk Interface (useful for voice messaging applications). To obtain a BSE, an enhanced service provider must interconnect with the LEC network through a "Basic Serving Arrangement" ("BSA"). BSAs are generally equivalent to traditional access arrangements provided to interexchange carriers.

For CMRS providers that offer enhanced services, ONA offers some ability to utilize individual functionalities of a BOC's local exchange network. CMRS providers that would like to obtain particular BSEs could seek to include them in their interconnection agreements, so that they may be procured in connection with Type 2 interconnection rather than through separate BSAs.

2. Advanced Intelligent Network

The FCC is considering whether and how to expand ONA by allowing third parties to access LEC Advanced Intelligent Network facilities. AIN is a generic term for next-generation network architectures that will allow additional flexibility in designing network-based services. If the FCC's Advanced Intelligent Network proposal does go forward, it could provide CMRS

providers with an opportunity to develop innovative services that respond to unique customer demands. At this time, however, it cannot be predicted if and when the FCC will mandate third party access to AIN facilities and functions.

CHAPTER IV: IMPORTANT TERMS AND CONDITIONS FOR TARIFFS AND AGREEMENTS

In negotiating service agreements and tariffs, CMRS providers should seek agreements that permit a well-ordered, readily understood, and stable business relationship. The chart on the next page summarizes important terms and conditions, which are discussed more extensively in the remainder of this Chapter.

A. Rate Stability Commitment

CMRS providers may wish to obtain long-term rate stability. One method of stabilizing interconnection costs is to convince the wireline carrier to include its charges in an inter-carrier contract. For example, a wireline carrier might be enticed to enter into a contract at a particular rate if the CMRS provider makes a minimum long-term service commitment.

Whether interconnection is provided under contract or tariff, CMRS providers may be vulnerable to unanticipated rate increases — even though carriers generally are prohibited from abrogating service agreements with other carriers. To minimize this risk, the service agreement should contain a provision explicitly waiving the carrier's right to increase the rates without the CMRS provider's consent. In addition, if the service agreement is to be tariffed, the underlying contract should require that the LEC give the CMRS provider a copy of any proposed tariff or revision far enough in advance of filing to ensure consistency with the contract. If there is any inconsistency, the clause should require the LEC to eliminate the problem before filing the tariff.

Finally, to help ensure that tariff rates remain competitive, CMRS providers might negotiate a provision requiring annual review and revision of the tariff rates based on comparison to market rates. Under such a provision, the initial rates would be a ceiling. The market basket might contain similar interconnection services (such as expanded interconnection for transport). If the basket decreases, the CMRS interconnection rates are adjusted accordingly. If it increases, the CMRS rates stay the same.

CHART 2:

IMPORTANT TERMS AND CONDITIONS

Rate Stability Commitment:

- The service agreement should waive the carrier's right to increase rates without the CMRS provider's consent.
- If the service agreement is to be tariffed, the underlying contract should require the LEC to give the CMRS provider a copy of any proposed tariff far enough in advance of filing to ensure consistency with the contract.

Description of Facilities:

- The interconnection contract or tariff should contain a description of the facilities provided and the technical specifications.

Reservation and Assignment of Numbers:

- The agreement should contain charges for the assignment of NXX codes and should state that the LEC will abide by the Central Office Code Administration Guidelines in assigning NXX codes.

Rates, Charges and Billing Arrangements:

- The agreement should clearly state all rates and charges and describe the payment arrangements.

Mutual Compensation Mechanism:

- The agreement should include specific language on mutual compensation for both interstate and intrastate traffic.

Service Interruption:

- The agreement should specify that the carrier will provide credits for service interruptions and that any minimums or discount thresholds will be adjusted to reflect interruption periods.

Confidentiality:

- The agreement should include a non-disclosure clause which limits the LEC's ability to disclose any information received from the CMRS provider both internally and externally.

B. Description of Facilities

The interconnection contract or tariff should also contain a description of the facilities provided and the technical specifications. This clause should provide that the wireline carrier will furnish all facilities and arrangements that are necessary to establish the physical connection and interchange of traffic. In addition, the clause should state that such facilities will include not only lines connecting the telephone company's central office with the mobile provider's switch or control point, but also additional facilities that may be required, such as remote transmitter links or NXX codes.

The agreement should also specify the arrangements that will be made concerning testing, trouble reporting, provision of equipment space and power, and whether any maintenance charges will be assessed. Finally, it should state which party is liable under various circumstances involving damages due to theft, patent infringements or other contingencies.

C. Reservation and Assignment of Numbers

As long as the LECs remain responsible for administering NXX codes, the agreement should contain charges for assignment of those codes. (The CMRS provider should keep in mind that the LEC may not impose a recurring charge for NXX codes used with Type 2 interconnection.) In addition, if the CMRS provider will require blocks of numbers within an NXX code, the agreement should specify the minimum number block size, the delivery interval for those numbers, and any associated charges. Finally, it may be advisable for the agreement to state that in assigning NXX codes, the LEC will abide by the industry Central Office Code Administration Guidelines.

D. Rates, Charges, and Billing Arrangements

In order to avoid disputes, the contract and tariff should contain a clear statement of all rates and charges. In addition, the contract and tariff should describe the payment arrangements. Customarily, mobile carriers agree to pay the wireline carrier for all charges within 30 days of the date of the bill. The contract and tariff should specify which services are billed for in arrears and which are billed for in advance; when the billing cycle closes each month; how soon after the billing period a bill is rendered; when payment is due; how payment is to be made; that the customer may withhold payment of disputed amounts; and that the carrier will refund overpayments with a specified rate of interest. The payment section should also provide for prorated charges where service is ordered or terminated in the middle of a month.

E. Mutual Compensation Mechanism

In the *Regulatory Parity Order*, the Commission required LECs to compensate CMRS providers for the reasonable costs incurred in terminating traffic that originates on LEC facilities. However, as discussed previously, carriers in the cellular context have not succeeded in negotiating mutual compensation agreements. Accordingly, in order to ensure that LECs comply with the mutual compensation requirements, CMRS providers should seek to include specific language on mutual compensation — for both interstate and intrastate traffic — in their agreements.

F. Service Interruption

The agreement should explicitly address service interruptions. Specifically, the carrier should be obligated to provide credits for service interruptions. Interruptions should be defined to include materially degraded service as well as outages. Moreover, the threshold interruption period that triggers a credit should be as short as possible. Finally, where relevant, monthly or annual minimums and discount thresholds (if any) should be adjusted to reflect interruption periods.

G. Confidentiality

The contract should include a non-disclosure clause which limits the LEC's ability to disclose any reports, forecasts, or other business information received from the CMRS provider. Some information — such as anticipated NXX code requirements and annual growth projections — could be unfairly utilized by the LEC's mobile service affiliates. For this reason, the non-disclosure clause should explicitly limit the internal disclosure of such information. Moreover, the contract should state that all information provided by the CMRS provider will only be used for appropriate purposes, such as providing interconnection facilities and meeting NXX code requirements.

CONCLUSION

The ability to secure reasonable interconnection to the landline telephone network is a crucial issue for CMRS providers. With the impending advent of new PCS offerings and the reclassification of many private mobile radio providers as common carriers, PCIA has commissioned this CMRS Interconnection Handbook in order to assist all classes of CMRS providers in understanding their interconnection rights and obligations. We will continue to monitor the FCC's interconnection rules and policies and to update members as the regulatory framework governing the personal communications industry continues to evolve.

ICCF

Industry Carriers
Compatibility Forum

Under the auspices of the
Carrier Liaison Committee

290 W. Mt. Pleasant Avenue
Livingston, New Jersey 07039
Fax: (201) 740-6949

Madeline Bogdan
Moderator
Room: 4D249
Phone: 201 740-4612

Dawne Drake
Secretary
Room: 4C227
Phone: 201 740-4657

CO Code Guidelines
Workshop

Facilitator

Madeline Bogdan

Co-Chairs

Denny Byrne
USTA

Jim Deak
NANPA

Marsha Olch
McCaw Cellular

Paul Kouroupas
Teleport

Sponsored by the Exchange Carriers
Standards Association

APPENDIX A: INDUSTRY CENTRAL OFFICE CODE ASSIGNMENT GUIDELINES

CENTRAL OFFICE CODE (NNX/NXX) ASSIGNMENT GUIDELINES

TABLE OF CONTENTS

SECTION	TITLE	PAGE
1.0	PURPOSE AND SCOPE	3
2.0	ASSUMPTIONS AND CONSTRAINTS	3
3.0	ASSIGNMENT PRINCIPLES	5
4.0	CRITERIA FOR THE ASSIGNMENT OF CENTRAL OFFICE CODES	5
5.0	CO CODE (NNX/NXX) ASSIGNMENT FUNCTIONS	[illegible]
6.0	RESPONSIBILITIES OF CODE APPLICANTS AND HOLDERS	9
7.0	CENTRAL OFFICE CODE CONSERVATION	11
8.0	MAINTENANCE OF THESE GUIDELINES	14
9.0	RESPONSIBILITIES FOR CODE RELIEF PLANNING	14
10.0	APPEALS PROCESS	15
11.0	GLOSSARY	16

APPENDICES A TO G

CENTRAL OFFICE CODE (NNX/NXX) ASSIGNMENT REQUEST
AND CONFIRMATION FORMS

This draft revision has been approved for initial closure but <u>does not</u> replace the approved version dated 7/14/93

1.0 Purpose and Scope of This Document

This document specifies guidelines for the assignment of central office codes (also referred to as CO codes in this document). The term CO code or NNX/NXX refers to sub-NPA destination codes for addressing. Sub-NPA refers to digits D-E-F of a 10-digit World Zone 1 address, e.g., 740 is the CO code (NNX/NXX) in 201-740-1111. Examples of uses for CO codes (NNX/NXX) for which these guidelines apply include plain old telephone service (POTS), Centrex, Direct Inward Dialing (DID), cellular mobile service, pagers, data lines, facsimile, coin phones, and customer owned pay phones. While these guidelines were developed at the direction of the FCC,[1] they do not supersede controlling appropriate World Zone 1 governmental or regulatory principles, procedures and requirements. These industry consensus guidelines are expected to apply throughout World Zone 1 subject to procedures and constraints of the World Zone 1 administrations unless the affected administrations direct otherwise.

These guidelines apply only to the assignment of CO codes (NNX/NXX) within geographic numbering plan areas (NPAs). This does not preclude a future effort to address non-geographic NPAs in the same guidelines.[2] While the ultimate delivery of any call to a CO code (NNX/NXX) need not be geographically identified, by necessity initial routing is geographically defined. Therefore, for assignment and routing purposes, the CO code (NNX/NXX) is normally associated with a specific geographic location within an NPA, from which it is assigned. For some companies this is also used for billing purposes.

2.0 Assumptions and Constraints

The development of the assignment guidelines include the following assumptions and constraints.[3]

2.1 These guidelines are intended to apply before and after implementation of interchangeable NPAs (INPA) in January 1995.

2.2 NANP numbering resources shall be assigned to permit the most effective and efficient use of a finite numbering resource in order to prevent premature exhaust of the NANP and delay the need to develop and implement costly new numbering plans. Efficient resource management and code conservation are necessary due to the industry impacts of expanding the numbering resource (e.g., expansion from 10 to 11 digits). Impacts to the industry include:

- Customer impacts (e.g., dialing, changes to advertising and stationery, etc.)
- CPE modifications
- Domestic and international switching hardware and software modifications
- Operational support systems modifications
- Reprogramming of non-telecommunications data bases that contain telephone numbers

---

1 This effort has been undertaken at the direction of the Federal Communications Commission (FCC), in a letter to NANPA dated June 21, 1991, in an attempt to develop guidelines that can be applied uniformly while using a finite numbering resources in the most efficient and effective manner possible.

2 Separate guidelines apply to the assignment of NXX codes within currently assigned Service Access Codes (SACs), and others will be developed, as appropriate, as new SACs are assigned by NANPA. For example, NXX assignment guidelines for the 800 and 900 SACs are available. Separate guidelines also will be prepared to address the assignment of numbering resources reserved for non-geographic applications.

3 At present, various procedures are employed to recover costs associated with the assignment and implementation of codes. The treatment of these or any future costs associated with CO code assignments is not addressed in these guidelines.