ORIGINAL

LAW OFFICES

FISHER WAYLAND COOPER LEADER & ZARAGOZA L.L.P.

2001 PENNSYLVANIA AVENUE, N.W.
SUITE 400
WASHINGTON, D. C. 20006-1851
TELEPHONE (202) 659-3494
TELECOPIER (202) 296-6518

WRITER'S DIRECT NUMBER

BEN C. FISHER
GROVER C. COOPER
MARTIN R. LEADER
RICHARD R. ZARAGOZA
CLIFFORD M. HARRINGTON
JOEL R. KASWELL
KATHRYN R. SCHMELTZER
DOUGLAS WOLOSHIN
DAVID D. OXENFORD
BARRY H. GOTTFRIED
ANN K. FORD
BRUCE D. JACOBS
ELIOT J. GREENWALD
CARROLL JOHN YUNG
GLENN S. RICHARDS
BARRIE DEBRA BERMAN
FRANCISCO R. MONTERO
ROBERT C. FISHER
SCOTT R. FLICK
GREGORY L. MASTERS*
LAUREN LYNCH FLICK
THERESA A. SMYTH
HOWARD C. GRIBOFF*
MILES S. MASON
KEVIN M. WALSH*
MARK H. TIDMAN*
THEODORE N. STERN*
ROBERT L. GALBREATH*
DAWN M. SCIARRINO*
KAREN C. RINDNER
BROOKS B. GRACIE III*

*NOT ADMITTED IN D.C.

BEN S. FISHER
(1890-1954)

CHARLES V. WAYLAND
(1910-1980)

OF COUNSEL
JOHN Q. HEARNE

RECEIVED

SEP 14 1995

FEDERAL COMMUNICATIONS COMMISSION
OFFICE OF SECRETARY

September 14, 1995

DOCKET FILE COPY ORIGINAL

VIA HAND DELIVERY

Mr. William F. Caton, Secretary
Federal Communications Commission
1919 M Street, N.W., Room 222
Washington, D.C. 20554

Re: MM Docket No. 95-42, RM-7567
Digital Data Transmission Within the Video
Portion of Television Broadcast Station Transmissions

Dear Mr. Caton:

Enclosed, on behalf of WavePhore, Inc., are the results of a recent laboratory evaluation of WavePhore's TVT1/4 datacasting system. Please include this submission in the above-referenced dockets.

Sincerely,

Scott R. Flick

Bruce D. Jacobs
Scott R. Flick

cc: William Hassinger
Enclosure
9029-000

No. of Copies rec'd 0+5
List ABCDE

RECEIVED

SEP 1 4 1995

FEDERAL COMMUNICATIONS COMMISSION
OFFICE OF SECRETARY

Evaluation of the WavePhore TVT 1/4 Data Broadcasting System

prepared by CRC

for

WavePhore Inc.

Communications Research Centre

31 August 1995, Ottawa, Canada

Communications Research Centre
Centre de recherches sur les communications

Evaluation of the WavePhore TVT 1/4 Data Broadcasting System

prepared by CRC

for

WavePhore Inc.

Communications Research Centre

31 August 1995, Ottawa, Canada

Table of Contents

1.0 Introduction 1

2.0 Description of the System 2
- 2.1 TVT1 Super FEC and interleaver 2
- 2.2 Datasync 2

3.0 Laboratory Set-up 3
- 3.1 Transmitter 3
- 3.2 Channel 3
- 3.3 Receiver 3
- 3.4 Test conditions 5

4.0 Interference Tests Results 6
- 4.1Co-Channel 6
- 4.2 Adjacent Channel 7

5.0 Noise and Multipath Test Results 9
- 5.1 Random Noise 9
- 5.2 Impulse Noise 10
- 5.3 Low RF Level 11
- 5.4 Multipaths 11

1.0 Introduction

This report outlines the results of the laboratory evaluation of the WavePhore TVT 1/4 data broadcasting system. The tests were carried out from August 14 to August 18 1995, at the Communications Research Centre (CRC).

Mr. Mel Engel, Mr. Peter Griesbaum and Mr. Robert Linde from WavePhore were present at CRC during the test period.

This document presents a short description of the improvements made to the WavePhore TVT 1/4 system and the result for all the tests carried out.

2.0 Description of the System

The unit tested at CRC includes the following major changes from the unit tested by the National Data Broadcast Committee in December 1994:

1. Incorporation of the interleaved super-FEC
2. Incorporation of the datasync

These changes are described below.

2.1 TVT1 Super FEC and Interleaver

The purpose of this change was to increase the TVT1/4 ability to recover lost data. The size of the Reed-Solomon Forward Error Correction data block is downsized, while still using the maximum number of correction bytes. In addition an interleaved pattern is incorporated in the transmission to insure that no single error stimulus would effect an entire FEC block. Instead, the error condition are spread across several FEC blocks.

General Description:

The Interleaved Forward Error Correction is a two-dimensional Reed-Solomon code. The horizontal X-axis consists of one full field of data or 888 data bytes. These are broken into eight separate 111 byte blocks, 91 of these bytes are data bytes and the remaining 20 bytes are added by the Reed-Solomon Forward Error Correction. The vertical or Y-axis is 60 fields of data of which 54 are data and 6 fields are the Error correction bytes. This array is called a superblock. When transmitted, the data is interleaved. This interleave is repeated for every field with each field starting with a different offset at the start of transmission.

2.2 Datasync

There are several factors that necessitated the implementation of the datasync circuitry:

1. Impulse noise could be interpreted as a false VSYNC
2. The location of the VSYNC was susceptible to ghosting
3. The optimal data sampling time would move with respect to VSYNC
4. Due to different analog tuning, all decoders are different

The datasync system uses an embedded code in the data to perform the field synchronization. This 31-bit code is injected in the data signal during lines 23 and 24 of the video signal.The datasync addresses each of the problems listed above by removing the decoder's dependence on VSYNC, using instead the data itself to lock the sampling time independently of the analog delays.

3.0 Laboratory set-up

The WavePhore TVT 1/4 data broadcasting system was tested with impairments and interference. The impairments included random noise, impulse noise, and static and dynamic multipaths. In the case of interference testing, adjacent and co-channel interference to data broadcasting from NTSC were measured.

The laboratory set-up for the evaluation of the TVT 1/4 data broadcasting system is presented in figure 3.1. The set-up is divided in three sections: Transmitter, Channel and Receiver.

3.1 Transmitter

A Fireberd 6000A generator is used as the PRBS data generator to feed the TVT 1/4 data broadcasting encoder. The Tektronix 1910 video test signal generator is used as the video source. The baseband output of the TVT 1/4 data broadcasting encoder (NTSC+) is modulated to the desired channel by a Drake VM2550 modulator.

The undesired NTSC signal is obtained from a Drake VM2500 modulator which is fed by a Tektronix 1910 video test signal generator.

3.2 Channel

An HP-11759C channel simulator is used to simulate multipath distortion. A Micronetics PNG 5200 generator is used to generate random noise. CRC has built a generator (electric motor) to emulate impulse noise. All signals are added together in a combiner to simulate the desired channel conditions (impairments and interference).

An HP-5347A average power meter is used to calibrate the RF system. (Currently CRC does not have a peak power meter to calibrate the impulse noise power).

3.3 Receiver

The output signal from the combiner is connected via a three-way power divider to the TVT 1/4 data broadcasting demodulator/decoder, and to the Tektronix 1450-1 NTSC demodulator. The output of the TVT 1/4 decoder is connected to a Fireberd 6000A BER meter for the BER measurement at 300 kbps. The output of the NTSC demodulator is connected to the Tektronix VM-700 waveform monitor for the objective tests. The third output of the combiner is connected to 4 different types of consumer television receivers for subjective video testing of impulse noise.

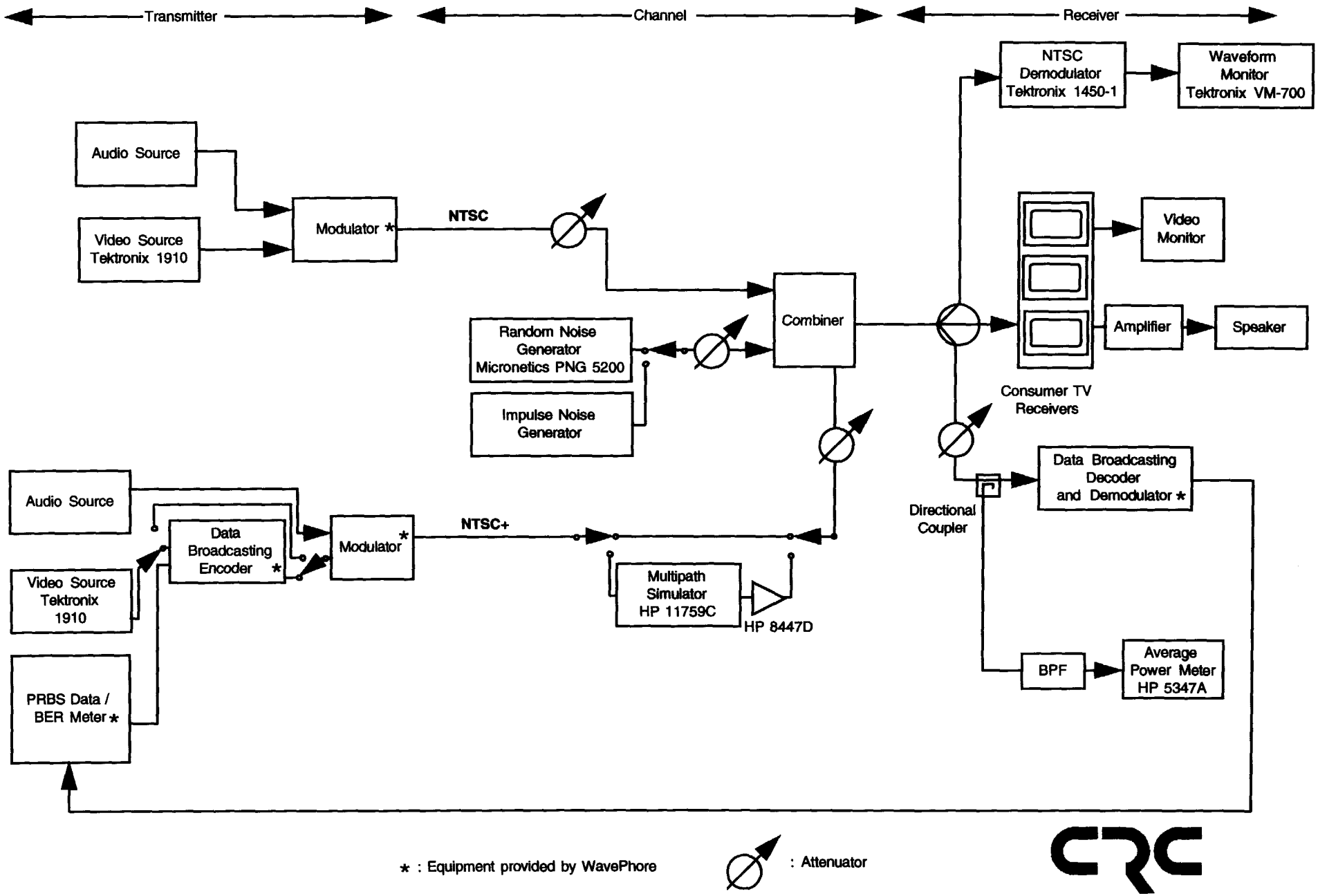

Figure 3.1: Equipment set-up for laboratory evaluation

3.4 Test conditions

When NTSC is the desired signal, the aural carrier power is adjusted to 5% (13 dB below) of the visual carrier peak power. When NTSC is the undesired signal, the aural carrier power is adjusted to 20% (7 dB below) of the visual carrier peak power.

4.0 Interference Tests Results

4.1 Co-Channel

The purpose of this test is to determine the performance of the TVT 1/4 data boroadcasting system (NTSC+) under co-channel interference. The NTSC+ desired signal is adjusted at the weak level (-55 dBm). The system is tested with and without a +12.5 kHz frequency offset on the undesired NTSC signal. The number of errors is recorded for three runs of 20 seconds each.

4.1.1) Co-Channel (no offset)

D/U dB	run 1 errors	run 2 errors	run 3 errors	Avg BER
25	0	0	0	0E-7
24	10194	0	0	5.66E-04

4.1.2) Co-Channel (offset = +12.5 kHz)

D/U dB	run 1 errors	run 2 errors	run 3 errors	Avg BER
30	0	0	0	0E-7
28	0	0	0	0E-7
26	0	0	0	0E-7
25	0	0	0	0E-7
24	236	0	28167	1.57E-03

4.2 Adjacent Channel

The purpose of this test is to determine the performance of the TVT 1/4 data broadcasting system (NTSC+) under upper and lower adjacent channel interference. The NTSC+ desired signal is adjusted at the weak level (-55 dBm). The system is tested with and without a +12.5 kHz (lower) or -12.5 kHz (upper) frequency offset on the undesired NTSC signal. The number of errors is recorded for three runs of 20 seconds each.

4.2.1) Upper Adjacent Channel (no offset)

D/U dB	run 1 Errors	run 2 Errors	run 3 Errors	Avg BER
-10	0	0	0	0E-7
-15	0	0	0	0E-7
-16	0	0	0	0E-7
-17	62702	36335	3583	5.67E-03

4.2.2) Upper Adjacent Channel (-12.5 kHz offset)

D/U dB	run 1 Errors	run 2 Errors	run 3 Errors	Avg BER
-15	0	0	0	0E-7
-16	0	0	0	0E-7
-17	40	0	67	5.94E-06
-18	no sync			

4.2.3) Lower Adjacent Channel (no offset)

D/U dB	run 1 Errors	run 2 Errors	run 3 Errors	Avg BER
-19	0	0	0	0E-7
-20	0	0	29122	1.62E-03

4.2.4) Lower Adjacent Channel (+12.5 kHz offset)

D/U dB	run 1 Errors	run 2 Errors	run 3 Errors	Avg BER
-15	0	0	0	0E-7
-16	0	0	0	0E-7
-17	0	0	0	0E-7
-18	0	0	0	0E-7
-19	0	0	0	0E-7
-20	0	0	0	0E-7
-21	0	31647	0	1.76E-03

5.0 Noise and Multipath Tests Results

The purpose of this test is to determine the performance of the TVT 1/4 data broadcasting system under different impairment.

5.1 Random Noise

Using NTSC+ as the desired signal, the power level is adjusted to -35 dBm level (Moderate). The noise level is increased to have an error rate between $1x10^{-6}$ and $1x10^{-3}$. The number or errors is recorded for three runs of 20 seconds each.

Table 5.1.1) Random Noise Test

C/N dB	S/N dB	run 1 Errors	run 2 Errors	run 3 Errors	Avg BER
43.1	37.8	0	0	0	0E-7
42.6	37.3	0	0	0	0E-7
42.4	37.1	0	0	0	0E-7
42.2	36.9	0	0	0	0E-7
42	36.7	0	0	0	0E-7
41	35.7	0	0	0	0E-7
40.5	35.2	0	32887	0	1.82E-03
40	34.7	0	20422	0	1.13E-03
38.5	32.2	0	0	49083	2.72E-03

5.2 Impulse Noise

Impulse noise is created by automotive ignition systems or motor-driven electrical appliances. To recreate that noise in laboratory, an AC motor running at a constant load is used as a source. The noise is picked up inductively from the motor, amplified, and band pass filtered into the television channel.

The system is calibrated with the NTSC signal as the desired signal adjusted to -35 dBm level (moderate). The noise is increased to reach the TOV level and the noise level at TOV is recorded as the reference.

Using the NTSC+ (TVT 1/4) signal as the desired signal, the power level is adjusted to -35 dBm level (Moderate). The noise level is increased or decreased to have an error rate between $1x10^{-6}$ and $1x10^{-3}$. The number of errors versus (TOV ± x dB) is recorded for three runs of 20 seconds each.

Table 5.2.1) Impulse Noise

TOV + x dB	run1 Errors	run 2 Errors	run 3 Errors	Avg BER
5	0	0	0	0E-7
8	0	0	0	0E-7
9	0	0	0	0E-7
10	0	29974*	0	1.66E-03
11	0	0	0	0E-7
12	0	0	0	0E-7
13	0	0	0	0E-7
14	0	0	0	0E-7
15	0	0	0	0E-7
16	0	29606	0	1.65E-03
17	0	0	0	0E-7
18	0	1907	34545	2.02E-03
19	2870	0	0	1.59E-04
20	2925	0	23564	1.47E-03
21	15561	28805	35265	3.55E-03

NOTE : The source of impulse noise used by CRC is different than the one used by other laboratories. Direct comparison may not be valid.

* : Possible test anomaly.

5.3 Low RF Level

The purpose of this test is to determine the performance of the TVT 1/4 data broadcasting system operating at low RF level (inferior to weak level). The power level of the NTSC+ signal is decreased to have an error rate between $1x10^{-6}$ and $1x10^{-3}$. The number of errors is recorded for three runs of 20 seconds each.

Table 5.3.1) Unit operating a low RF level

RF Level -dBm	Run 1 Errors	Run 2 Errors	Run 3 Errors	Avg BER
55	0	0	0	0E-7
57	0	0	0	0E-7
57.5	0	0	0	0E-7
58	0	0	0	0E-7
58.5	0	0	0	0E-7
59	No sync	No sync	No sync	No sync

5.4 Multipaths

The purpose of multipath testing is to determine if the TVT 1/4 data broadcasting system is robust to multipaths. The BER measurement is conducted with combinations of multipaths (see Table 5.4.2 for a description). The NTSC+ signal is adjusted to -30 dBm. The number of errors is recorded for three runs of 20 seconds each.

Table 5.4.1) Robustness to multipath ensemble

Ensemble Number	Run 1 Errors	Run 2 Errors	Run 3 Errors	Avg BER
1	No sync*	No sync*	No sync*	No sync*
2	0	0	0	0E-7
3	0	0	0	0E-7
4	0	0	0	0E-7

*When the 20μs multipath in ensemble 1 is lowered by 2 dB, from -14 to -16, there is no error recorded.

Table 5.4.2) Description of multipaths

ensemble	delay	attenuation	phase
1 (static)	0.1 μs 1 μs 6 μs 20 μs	-3 dB -12 dB -17 dB -14 dB	-18° 314° 40° 75°
2 (static)	0.2 μs 1.9 μs 3.9 μs 8.2 μs	-14 dB -18 dB -24dB -22dB	350° 50° 0° 55°
3 (dynamic)	1μs	- 14 dB	360° in 0.5 sec. (2 Hz rate)
4 (static)	-0.7 μs 0.1 μs -0.4 μs	-28 dB -10 dB -30 dB	30° 240° 240°