Roger W. Steiner, Esq.
Missouri Public Service Commission
P.O. Box 360
Jefferson City, Missouri 65102

Betty D. Montgomery, Esq.
Duane W. Luckey, Esq.
Ann E. Henkener, Esq.
Public Utilities Commission of Ohio
180 E. Broad Street
Columbus, OH 43215-3793

Personal Communications Industry Association
c/o R. Michael Senkowski, Esq.
Jeffrey S. Linder, Esq.
Stephen J. Rosen, Esq.
Wiley, Rein & Fielding
1776 K Street, N.W.
Washington, D.C. 20006

National Emergency Number Association
c/o James R. Hobson, Esq.
Donelan, Cleary, Wood & Maser, P.C.
100 New York Avenue, N.W., Suite 750
Washington, D.C. 20005-3934

Alan J. Gardner
Jerry Yanowitz
Jeffrey Sinsheimer
Jennifer A. Johns
California Cable Television Association
4341 Piedmont Avenue
Oakland, CA 94611

California Cable Television Association
c/o Donna N. Lambert, Esq.
Christopher A. Holt, Esq.
Mintz, Levin, Cohn, Ferris, Glovsky and Popeo, P.C.
701 Pennsylvania Avenue, N.W., Suite 900
Washington, D.C. 20004

PCS PrimeCo, L.P.
c/o William L. Roughton, Jr., Esq.
1133 20th Street, N.W.
Washington, D.C. 20036

Kathy L. Shobert
Director, Federal Affairs
General Communications, Inc.
901 15th Street, N.W., Suite 900
Washington, D.C. 20005

Time Warner Communications Holdings, Inc.
c/o Brian Conboy, Esq.
Sue D. Blumenfeld, Esq.
Thomas Jones, Esq.
Wilkie Farr & Gallagher
Three Lafayette Centre
1155 21st Street, N.W.
Washington, D.C. 20036

National Exchange Carrier Association, Inc.
c/o Richard A. Askoff, Esq.
100 South Jefferson Road
Whippany, New Jersey 07981

The Ad Hoc Coalition of Competitive Carriers
c/o Werner Hartenberger, Esq.
Laura H. Phillips, Esq.
J.G. Harrington, Esq.
Dow, Lohnes & Albertson
1255 Twenty-third Street, N.W., Suite 500
Washington, D.C. 20037

Sydney R. Peterson, President
Niagara Telephone Company
1133 Main Street
P.O. Box 3
Niagara, Wisconsin 54151-0003

MCI Telecommunications Corporation
c/o Loretta J. Garcia, Esq.
Donald J. Elardo, Esq.
1801 Pennsylvania Avenue, N.W.
Washington, D.C. 20006

Mark C. Rosenblum, Esq.
John J. Langhauser, Esq.
Clifford K. Williams, Esq.
AT&T Corporation
295 North Maple Avenue, Room 3244J1
Basking Ridge, NJ 07920

Jones Intercable, Inc.
c/o Paul Glist, Esq.
Christopher W. Savage, Esq.
John C. Dodge, Esq.
Cole, Raywid & Braverman, L.L.P.
1919 Pennsylvania Avenue, N.W., Suite 200
Washington, D.C. 20006

Cincinnati Bell Telephone Company
c/o Thomas E. Taylor, Esq.
Christopher J. Wilson, Esq.
Frost & Jacobs
2500 PNC Center
201 East Fifth Street
Cincinnati, Ohio 45202

Robert M. Lynch, Esq.
Mary W. Marks, Esq.
J. Paul Walters, Jr., Esq.
SBC Communications, Inc.
175 E. Houston, Room 1262
San Antonio, Texas 78205

Gordon F. Scherer
Susan Drombetta
Scherers Communications Group, Inc.
575 Scherers Court
Worthington, OH 43085

Texas Advisory Commission on State Emergency Communications
c/o Richard A. Muscat, Esq.
Assistant Attorney General
Consumer Protection Division
Public Agency Representation Section
P.O. Box 12548, Capitol Station
Austin, Texas 78711-2548

APPENDIX B

Service Provider Number Portability - A Description of the Overall Solution And NYNEX's Evaluation of the Various Addressing Schemes

I. Introduction

The transition from an interim (switch-based) number portability (INP) solution to a long term database (db) solution for Service Provider Number Portability (SPNP, also known as Local Number Portability or LNP) or, for that matter, any other type of number portability is enormous. Most industry attention has been focused on the addressing scheme which is only one segment of the total solution.

Currently, the industry has no agreement on a SPNP db architecture nor any method of providing the master SPNP db function. The industry also has no standard SMS (Service Management System) to SMS interface for SPNP nor does the industry have agreement on other vital SPNP call processing components such as default routing, query indicator and data manipulation.

Although the addressing scheme is one part of SPNP, it is arguably the most important. The addressing scheme impacts almost all network and call processing components. A change in the addressing scheme will be costly and time consuming to plan and implement.

Current technology - i.e. trigger mechanisms for AIN and IN along with their associated queries and responses - do not satisfactorily support SPNP. Technical development will be required for any of the addressing schemes.

Parties have proposed utilizing an interim addressing scheme (CPC or LANP) initially and later evolving to a permanent addressing scheme (LRN). A great deal of work is required for the industry to develop the components identified in the call model. It would be a far more efficient use of industry resources to focus on one addressing scheme and develop the components for the one chosen.

This appendix contains: one, a description of the major network components, basic call processing, etc. needed for the total SPNP solution; two, specific descriptions of the three addressing schemes now under industry scrutiny, addressing why they are three unique proposals made to address the same need in an SPNP environment; and three, a comparison of the three SPNP proposals.

II. The Long Term Database Solution for SPNP

A. The Work Effort Involved

NYNEX does not know what the costs of implementing service provider number portability are at this time. NYNEX believes the trials will provide some of this information. Although NYNEX is unable to address the overall costs of SPNP, it can address the network requirements for a db solution and the steps that need to be taken to implement the solution, thus providing an overview of the work effort involved. However, this list is not meant to be all inclusive since many unknowns still exist which the industry will become more familiar with as it moves forward with the proposed trials.

1. Requirements for SPNP

Some of the requirements for SPNP are as follows:

- Upgrade the db triggering mechanism in the switch -
  Either add AIN to the triggering end office switches (EOs) or upgrade IN to perform the trigger. Any EO serving a number that will be ported requires this upgrade.
- Add db equipment or db access ability -
  Carriers that have a need to query will need access to the db information. They can install their own db equipment SMS/SCP (Service Control Point) or access another carrier's db. Possibilities for the costs involve either a cost for the equipment and cost for the db information or a cost to access another db.
- Add signaling capacity -
  A carrier that chooses to query will need to expand their signaling network's capacity to handle the additional signaling load. This will include links and most likely STPs.

Additional considerations include the following:

- A ported-from carrier will need to upgrade their network for calls within their network to ported customers and calls from other non-querying networks to ported customers (fail-safe).
- The ported-from carrier may be responsible for performing the fail-safe function (to support non-querying carriers).

2. Steps for Implementation

The steps that need to be taken to deploy SPNP can be divided into 2 activities:

- providing the SPNP db infrastructure; and
- providing the triggering and signaling mechanisms in the network.

The steps to providing the db infrastructure include:

- choosing the addressing scheme;
- developing network requirements (routing, signaling, triggering, etc.);
- determining the functions and funding of the db administrator;
- choosing a db administrator;
- arranging the business relationships between the db administrator and the querying carriers;
- building the db(s);

- deploying the SMS equipment; and
- interconnecting the carriers' SMSs to the administrator's SMS.

Some of the steps for providing the triggering and signaling mechanisms are:

- the carrier's decision regarding the technology to use for the SPNP platform (IN, AIN, other);
- determining the appropriate point (assuming the carrier has some flexibility in this regard) at which it is reasonable to move the EO from the INP to SPNP (db) solution -
  The decision for a carrier to upgrade from INP to SPNP should be made on an EO by EO basis. From an economics and business perspective, one ported number would not be sufficient to trigger the expense associated with upgrading the switch to the long term database solution;
- deploying the db (i.e., SCP) and SMS equipment; and
- deploying the signaling infrastructure to access the db information.

C. SPNP Network Components and Basic Call Processing

A diagram of the network components and basic call processing for SPNP as well as key definitions for SPNP is provided below.

SERVICE PROVIDER NUMBER PORTABILITY (SPNP)
NETWORK COMPONENTS AND BASIC CALL PROCESSING

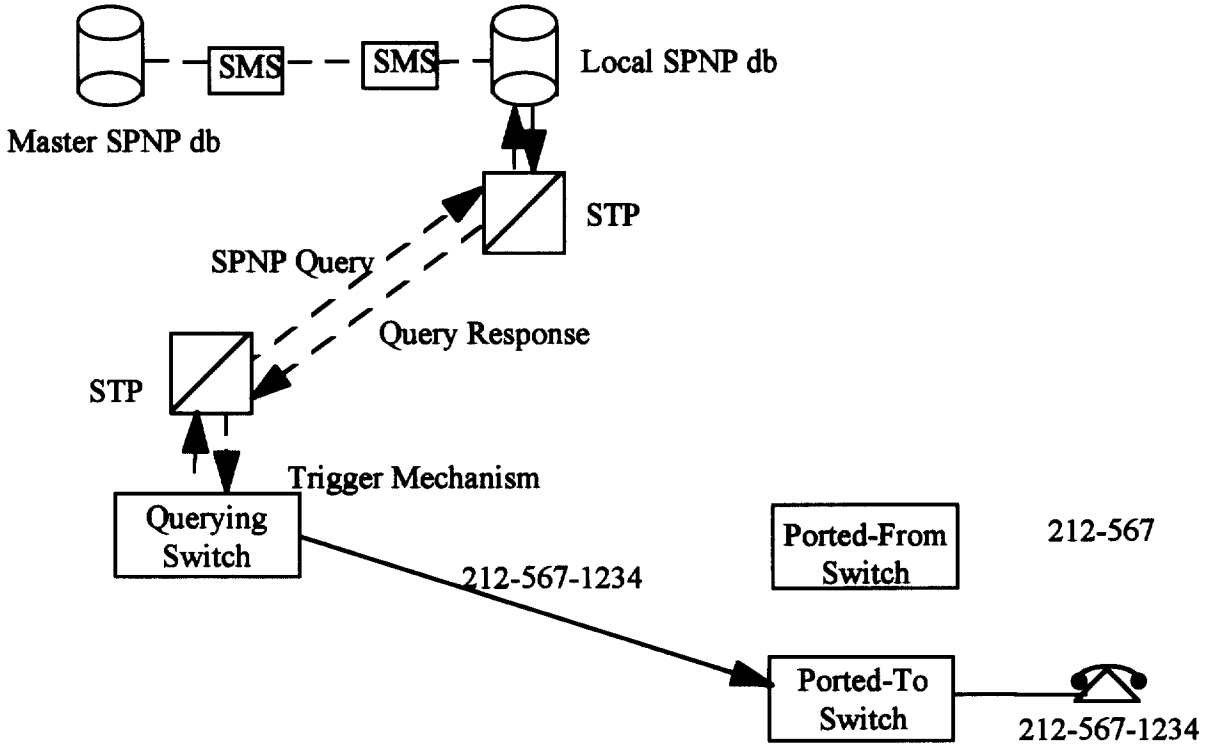

1. A Trigger Mechanism in the Querying Switch generates an SPNP Query.
2. A Local SPNP db is accessed via SS7 signaling.
3. The information contained in the SPNP query is simply the Customer Number.
4. The Query Response will most likely perform the following functions:
   - provide the Network Address
   - set a Query Indicator
   - Data Manipulation of information within the call parameters
   - provide Default Routing information
5. The SPNP db Architecture will match a customer number to a network address. It will also require the ability to provide default routing information.
6. The Master SPNP db will administer the SPNP db information. Access to the master SPNP db is via an SMS to SMS connection.
7. The querying switch will route the call based on the NPA-NXX (Numbering Plan Area) of the network address provided in the query response.

The items identified by underlined and bold text are defined on the following pages of this appendix.

The above model refers to basic call processing only. The industry has yet to sufficiently address feature processing, Operator Services and db-based services. However the industry does understand and generally agree that SPNP implementation will negatively impact these services.

SERVICE PROVIDER NUMBER PORTABILITY (SPNP) DEFINITIONS

Trigger Mechanism	The trigger mechanism is the technology which allows a switch to determine the need to perform a db query, initiate the query and provide the proper call processing based on the response to the query. The AIN 3/6/10 Digit Trigger, although not sufficient, most closely supports the requirements for an SPNP trigger mechanism. Implementation of proposals to develop a new, number portability specific AIN trigger would relieve many of the anticipated problems.
Querying Switch	The querying switch must have the appropriate trigger mechanism capabilities. This applies to the originating service provider (OSP), intermediate provider (N-1) and terminating "access" provider (TAP) call processing scenarios.
SPNP Query	The SPNP query is the query to the SPNP db which requests routing information based on the digits in the called party number parameter (CedPN).
Local SPNP db	SPNP queries will go to a local SPNP db determined by the querying switch (carrier). The local SPNP db will require the intelligence to identify and analyze the SPNP query and perform the functions required to provide the appropriate query response. The industry generally agrees that local SPNP dbs will be SCPs.
Customer Number	The customer number is the 10 digit North American Numbering Plan (NANP) number that end users will dial when calling another end user. Customer numbers will be ported when end users change service providers.
Query Response	The query response is the response provided by the SPNP db to the querying switch. The query response may provide a network address, set a query indicator, manipulate the data within the call processing parameters, provide default routing information, etc.

SERVICE PROVIDER NUMBER PORTABILITY (SPNP) DEFINITIONS *(cont'd)*

Network Address	The network address is the routing information provided to a querying switch so that a call can be routed to the appropriate terminating switch containing the customer number. In a SPNP environment, all network addresses take the form of a 10 digit NANP number based on the carrier (CPC), end office (LRN) or line number (LANP) derived from the appropriate addressing scheme (defined later).
Query Indicator	The query indicator will provide the query status of the call. It will inform subsequent switches in the call path whether an SPNP query has been performed on the CedPN. If a query has been performed then no reason exists to perform another one.
Data Manipulation	Examples of data manipulation are: setting a query indicator; placing the customer number in the GAP; and placing the network address in the CedPN.
Default Routing	The SPNP db will need to provide default routing treatment in the query response when the SPNP db does not have ported number information on the customer number. Examples of what may be provided for default routing in the query response are the Continue message in AIN or the customer number.
Master SPNP db	The master SPNP db will contain all the appropriate SPNP information (see SPNP db Architecture). The industry generally agrees that the db will be administered by a non-competing third party. Carriers and db providers will be able to download the db information to their local dbs via an SMS to SMS connection.
SPNP db Architecture	The SPNP db architecture will match a customer number to a network address and provide default routing treatment based on the NPA-NXX of the customer number.

III. Comparison of the specific proposed "solutions" now under industry consideration.

Another major component of SPNP not identified in the call model is the **Addressing Scheme**. The addressing scheme is the routing number used to deliver the call to the customer number. MCI's proposed CPC solution, AT&T's proposed LRN solution and US Intelco's LANP solution are all addressing schemes. This component of SPNP has received the most attention from the industry and the differences between them are described below.

A. The need for uniformity.

On a regional basis, i.e. the subtending area being served by the database(s), two elements of any number portability solution should be uniform - the addressing scheme and the database architecture. On a national basis, uniformity is not required. However, agreement on some commonality could provide economies of scale and will definitively be required for interworking of services and uninterrupted call processing.

1. Addressing Scheme

The addressing scheme is the routing number used to deliver the call to the customer.
If the appropriate uniform addressing scheme was chosen it could:

- conserve NANP resources (LRN is a good example of this as noted below);
- ensure existing trunking efficiency (LRN and LANP are good examples of this);
- provide the potential for location portability and mobility services (LRN and LANP are also good examples of this).

However, all addressing schemes will require switch and network development. On a national basis, a uniform addressing scheme would provide focus to the carriers' and equipment manufacturers' development plans and would therefore result in a more cost effective, flexible and timely deployment of number portability.

2. Database

All proposed addressing schemes also support the concept of a master database, whether it be on a regional or national basis, which matches network numbers to customer numbers and can be accessed by any interested carrier. A uniform addressing scheme would most likely result in a more cost effective, flexible and timely deployment of a number portability database as well.

B. Summary of the various schemes

None of the technology needed for these solutions - CPC, LRN and LANP - is available from equipment manufacturers yet. They require standards development, database implementation and network equipment development to provide the current level of service customers enjoy in regards to call set up time, feature availability, etc. Also, the CPC and LANP solutions fail to provide better functionality than the current interim solutions while imposing enormous costs. (See Appendix A to NYNEX's Comments.) In addition they do not conserve NANP resources. The LRN solution has greater long term potential. It will require standards development and network upgrades thus also incurring large costs. However, it is anticipated to utilize NANP

resources conservatively. Additionally, the standards development should provide greater functionality and all of the proposals - CPC, LRN, LANP - would benefit from this proposed standards work.

The main differences in the three proposals, noted by their specific addressing schemes, are: the addressing schemes themselves; the use of NANP resources; the support of features; and the ability to use the addressing schemes for future services. The table below summarizes the findings. This is followed by a detailed discussion of the individual proposals.

C. Chart Summarizing Findings

ADDRESS SCHEME	ADVANTAGES	DISADVANTAGES
CPC	• Attempts to use existing switching technology and functionality.	• Very poor use of NANP resources. • Does not allow for existing trunking efficiencies in the LEC network. • Is not evolveable to location portability and mobility services. • Does not support feature functionality with AIN triggers.
LRN	• Conservative use of NANP resources. • Maintains the existing trunking efficiencies in the LEC network. • Is evolveable to location portability and mobility services. • Proposed NP specific standard development will solve many feature problems associated with existing switching technology and functionality.	• Requires SS7 and AIN standards development.
LANP	• Attempts to use existing switching technology and functionality. • Maintains the existing trunking efficiencies in the LEC network. • Is evolveable to location portability and mobility services.	• Poor use of NANP resources. • Network number is translated in ported-to switch instead of customer number. • Does not support feature functionality with AIN triggers.

D. The three solutions and their differences.

The solutions are defined by their addressing schemes. The addressing scheme refers to the network address of the ported number which the network uses to route the call to the customer number. Before the concept of number portability, the NPA-NXX of a geographic number always identified the switch address and the NPA-NXX-XXXX identified the line address or specific customer in that specific switch.

The three addressing schemes under discussion are as follows.

1. Carrier Portability Code (CPC)

The NPA of the Called Party Number (CedPN) is replaced by a pseudo-NPA, called the CPC, which identifies a carrier. The CedPN now takes the form of CPC-NXX-XXXX. One CPC per carrier per NPA may be used in the serving area. The CPC is taken from the list of unused NPAs and the participating carriers in the local serving area mutually agree to its use.

The call is routed using the CPC to the appropriate carrier. The customer number, not the CPC, is translated as the line number in the switch. When the call reaches the terminating office the switch must translate the CPC into the NPA and complete the call. Software for the 5ESS switches must be developed for this capability to work. DMS-100 switches would require extensive manual translations work which would then need to be eliminated if the industry subsequently migrated to another proposed solution. Thus, CPC requires switch enhancements which serve no other purpose and would divert development from capabilities that would have long term usefulness.

Because the CPC addressing scheme uses unassigned NPA codes, it utilizes NANP resources poorly. In addition, due to the fact that the CPC designates a carrier and not a switch it does not provide the granularity necessary to preserve maximum trunking efficiency nor allow location portability or mobility services. Additionally, because CPC cannot share NXX codes among multiple switches, carriers with more than one switch will have difficulty routing calls to numbers that have been ported to their network since the CPC will only identify their network, but not which switch in their network. CPC's refusal to allow NXX code splitting causes confusion as to which switch the call should be sent and denies reciprocity of ported numbers to carriers with more than one switch. Any of the work arounds considered pose potential degradation in the call processing capabilities of the network.

2. Location Routing Number (LRN)

The LRN is one 10 digit number which identifies a switch. The call is routed through the network using the LRN as the CedPN and the customer number is carried through the network in another call parameter, the Generic Address Parameter (GAP). The customer number is translated as the line number in the switch. When the call arrives at the terminating switch, the LRN and the customer number are swapped and the call is completed. Although both the GAP and the Forward Call Indicator, used as a query indicator, exist, new values for the allowable parameters for these fields would have to be defined. This would require the development and deployment of new end office and Signaling Transfer Point (STP) switch generic software. Additionally, LRN

utilizes a Forward Call Indicator (FCI) to note whether the call has already been queried. However, this capability is not yet available from NYNEX's equipment suppliers.

The LRN addressing scheme identifies the terminating switch. Not only is this a conservative use of the NANP resources, it is a good application for the intended use of NANP resources. A separate switch identifier will facilitate administration and trouble shooting and provides the necessary granularity to support the routing efficiencies currently built into the telecommunications network. It also allows the potential for mobility services and location portability. In addition, LRN is flexible enough to be used as a carrier identifier if a carrier so desired although a switch identifier is much more appropriate for the efficient processing of calls in large networks.

3. Local Area Number Portability (LANP)

Each customer number (CNA or customer name address) has a corresponding network address (NNA or network node address). The call is routed through the network using the NNA as the CedPN. The NNA is translated as the line number in the switch. In essence each customer number has an alias network number. At the terminating switch no translation is made from the NNA to the CNA, the call is completed to the NNA. LANP will allow a number to be ported today. However, to allow Caller ID and other services to work, new end office switch generic software would be required. See the charts attached to NYNEX's Comments as a summary guide.

The LANP addressing scheme identifies the terminating switch and line number. Since the CNA and NNA are not matched in all support systems, administration and trouble shooting will be more difficult. Although this addressing scheme provides the necessary granularity to support the routing efficiencies currently built into the telecommunications network and allows the potential for mobility services and location portability, it utilizes NANP resources poorly because this addressing scheme uses 2 numbers for every customer.

To overcome this perception that LANP utilizes NANP resources inefficiently, it has been suggested that CNAs in the ported-from switch could be reused as NNAs for numbers that are ported-to it. If this approach were used, the query indicator would become vital. The query indicator will tell downstream switches that the call has been queried and thus there is no need to perform another query. Typically the penalty for not having a query indicator is unnecessary queries. However in the proposed reuse discussed above, the penalty would be misrouted calls. None of the existing query indicators (i.e., separate trunk groups, ANI II digits) is robust enough to avoid the potential of misrouted calls. Even with a robust query indicator, such as the LRN proposed FCI, NANP resources are very likely to be stranded on incumbent LEC switches for the foreseeable future. It is more likely that the flow of service provider ported numbers will be from LECs to CLECs. This would result in the Competitive Local Exchange Carriers (CLECs) having 2 numbers for each customer and the LECs having many CNAs with little new demand for NNAs. Thus, the real "numbering cost" of this solution is that the deployment of CLEC switches will rapidly use up NXXs within a NPA.

E. Common Attributes of the three solutions.

The following three attributes - query location, trigger mechanism and database access and architecture - are common to all three of the proposed addressing schemes.

1. Query Location

No restriction is placed on whether a database query comes from an originating switch/carrier, intermediate switch/carrier or terminating switch/carrier. Each carrier has the option to place a query. However, a carrier should not ignore the query indicator, if implemented. If it does, when a call has already been queried, as discussed above, the best case scenario is that additional queries will result and thus slower call set up time. The worst case scenario, as with the LANP solution, is misrouted calls. Additionally, the CPC is only meaningful in the terminating NPA or LATA.

2. Trigger Mechanism

Each solution proposes an AIN 3/6/10 Digit Trigger (also called a Public Office Dial Plan (PODP) trigger) on the CedPN analyzing either 6 or 10 digits.

This implementation has two implications:

- one, it allows each carrier the option to place the trigger on an NPA-NXX or an NPA-NXX-XXXX; and
- two, adverse AIN interaction problems with call processing and other features will occur.

To rectify these adverse feature interactions, new development, as discussed below, has been discussed within the industry.

For an AIN implementation, each proposal would benefit from a unique AIN Trigger for number portability rather than the currently defined 3/6/10 Digit Trigger. The LRN proposal makes this recommendation and AT&T has followed-up by initiating standards development. However, the necessary standards work has just begun. It is not known when the appropriate standards will be complete nor when equipment manufacturers will deploy these new capabilities. The proponents of the other two addressing schemes agree that their proposals would benefit from a new SPNP specific trigger.

Switch and network equipment providers could choose to develop the AIN query and response functionality defined in each proposed solution on the IN platform. However, nothing unique about any of the solutions make them easier to develop on an IN platform. The CPC solution has been made to work on an IN platform in a laboratory environment on a Siemens switch with special development for generic software specific to Siemens' switches. Unfortunately, like many incumbents, NYNEX does not utilize Siemens Stromberg-Carlson switches and must deploy this solution in a real world rather than laboratory environment. An IN based solution would also benefit from standards agreement on a new Translation Type (TT).

3. Database Access & Information

The SPNP database can be either accessed from a centralized SCP or downloaded to a local SMS from a host SMS and placed in a local SCP. The database contains information on ported numbers. However, what information is contained and the way it is structured will depend on the address scheme implemented for a particular region.

F. Support for E911 and Operator Services

None of the proposed solutions provides acceptable methods for retaining the integrity of current Operator Services (OS) and E911 call processing.

1. Operator Services (OS)

OS switches typically do not have advanced signaling capabilities. They are restricted generally to MF trunking with limited abilities to perform TCAP queries to the Line Information Data Base (LIDB) which are required for alternate billing services (calling card, collect, third party). These queries are routed to the appropriate database based on NPA-NXX. The LIDB has no rerouting capabilities to redirect the query to the new (ported-to) service provider.

Busy line verification, another OS, keys off of the NPA-NXX of the target customer and the OS switch has no capability to determine the proper end office of a ported customer. If the customer has been ported, the operator will verify the wrong switch and provide improper status of the line.

2. E911

If the ported customer changes locations or the Automatic Number Identification (ANI) of the ported customer is different than the customer number, E911 routing (to the closest Public Safety Answering Points (PSAP)) and Automatic Location Identification (ALI) information could be impacted.

IV. Current interim solutions versus the proposed "long term" solutions.

Since the interim number portability solutions utilize a different customer number for call originations it has an adverse effect on Caller ID. However, they retain the integrity of automatic recall (AR) , automatic callback (AC) and billing from a ported customer.

In the proposed "long term" solutions, Caller ID can be maintained but AR and AC activations to and from the ported customer are not possible. In addition, if the method of implementing the solutions is to utilize existing AIN triggers, then AR and AC will be denied for some non-ported customers. Rating and billing for interexchange customers can also be negatively impacted.

The charts attached to NYNEX's Comments (Appendix A) demonstrate the comparison between the interim solutions and the proposed "long term" solutions.

V. Conclusion

Through this appendix attached to its reply comments, NYNEX has demonstrated that the development and deployment of SPNP is a complex, resource-intensive undertaking. The three addressing schemes now under industry study for a potential SPNP implementation are each unique. Although each has its benefits and drawbacks, it would be inefficient and wasteful to migrate from one to the other. The industry should focus on one in particular and apply its resources to developing that scheme to its fullest potential.

Parties filing comments in 95-116, the FCC's NPRM on Number Portability

Ad Hoc Coalition of Competitive Carriers (the "Coalition")
AirTouch Paging and Arch Communications Group ("Arch")
American's Carriers Telecommunication Association ("ACTA")
Ameritech
Association of Public-Safety Communications Officials-International, Inc. ("APCO")
Association for Local Telecommunications Services ("ALTS")
AT&T Corp. ("AT&T")
Bell Atlantic ("BA")
Bell Atlantic NYNEX Mobile, Inc. ("BANM")
Bell South Corporation and Bell South Telecommunciations, Inc. ("Bell South")
California Cable Television Association ("CCTA")
People of the State of California and the Public Utilities Commission of the State of California ("CPUC")
Cellular Telecommunications Industry Association ("CTIA")
Cincinnati Bell Telephone ("CBT")
Citizens Utilities Company ("Citizens")
Competitive Telecommunications Association ("CompTel")
Ericcson Corporation ("Ericsson")
Florida Public Service Commission ("FPSC")
General Communication, Inc. ("GCI")
General Services Administration ("GSA")
GO Communications Corporation ("GO")
GTE Service Corporation ("GTE")
GVNW Inc./Management ("GVNW")
Illinois Commerce Commission ("ICC")
Independent Telecommunications Network, Inc. ("ITN")
The Interactive Services Association ("ISA")
Jones Intercable, Inc. ("Jones")
David L. Kahn ("Kahn")
LDDS Worldcom, Inc. ("LDDS")
Marion County Board of County Commissioners ("Marion County")
MCI Telecommunications Corporation ("MCI")
MFS Communications Company, Inc. ("MFS")
Missouri Public Service Commission ("MoPSC")
National Association of Regulatory Utility Commissioners ("NARUC")
National Emergency Number Association ("NENA")

Parties filing comments in 95-116, the FCC's NPRM on Number Portability *(cont'd)*

National Exchange Carrier Association, Inc. ("NECA")
National Cable Television Association, Inc. ("NCTA")
National Telephone Cooperative Association ("NTCA")
National Wireless Resellers Association ("NWRA")
New York State Department of Public Service ("NYSDPS")
Nextel Communications, Inc. ("Nextel")
Niagara Telephone Company ("Niagara")
NYNEX Telephone Companies ("NYNEX")
Public Utilities Commission of Ohio ("PUCO")
Omnipoint Corporation ("Omnipoint")
Organization for the Protection and Advancement of Small Telephone Companies ("OPASTCO")
Pacific Bell ("Pacific")
Paging Network, Inc. ("PageNet")
Personal Communications Industry Association ("PCIA")
PCS PrimeCo, L.P. ("PrimeCo")
SBC Communications, Inc. ("SBC")
Scherers Communications Group, Inc. ("SCG")
Seattle Local Area Number Portability Trial ("Seattle")
Sprint Corporation ("Sprint")
TDS Telecommunications Corporation ("TDS")
The Telecommunications Resellers Association ("TRA")
Telemation International, Inc. ("Telemation")
Teleport Communications Group, Inc. ("TCG")
Teleservices Industry Association ("TIA")
Texas Advisory Commission on State Emergency Communications ("TX-ACSEC")
Public Utility Commission of Texas ("PUCT")
Time Warner Communications Holdings, Inc. ("TWC")
United States Small Business Administration ("USSBA")
United States Telephone Association ("USTA")
U S Airwaves, Inc. ("AirWaves")
U S Intelco Networks, Inc. ("U.S. Intelco")
U S WEST, Inc. ("US West")
Yellow Pages Publishers Association ("YPPA")

APPENDIX C

New York Telephone
A NYNEX Company

Lawrence J. Chu
Director
Regulatory Planning

1095 Avenue of the Americas, Room 3429
New York, New York 10036
Phone (212) 395-1209

July 21, 1995

Mr. Greg Pattenaude
New York Public Service Commission
Three Empire State Plaza
Albany, New York 12223

Dear Greg,

On March 8, 1995 the New York Public Service Commission ("Commission") directed New York Telephone ("NYT") and Rochester Telephone and authorized other interested parties "to work with the Commission staff to study the feasibility of the conduct of a trial of true number portability using data base technology to begin on or around February 1, 1996...." The Commission further directed that "the feasibility study should include, but is not limited to a description of the parameters of such a technical of service provider portability, the participants in such a trial, and any costs to participate in such a trial to be borne by regulated utilities."

NYT has been actively studying the feasibility of a technical trial of a true number portability solution using data base technology along with Staff and other members of the industry as a member of the steering committee of the New York Local Number Portability Trial Committee ("Trial Committee"). On June 16, 1995, the Trial Committee

NYNEX Recycles

chose MCImetro as the trial data base service provider in Manhattan. Another vendor was chosen for the Rochester Telephone service territory.

The MCImetro solution utilizes a three digit Carrier Portability Code ("CPC") in conjunction with a dialed NXX to identify the correct local service provider. The CPC is stored against the subscriber's dialed number in a local number portability ("LNP") data base and replaces the NPA for call routing purposes. NYT has designated two end offices to be used in the trial. In each of the trial offices, NYT has designated two NXX codes, for a total of 35,000 working telephone numbers, to be included in the trial.

As described more fully in the attachment, NYT has identified several technical difficulties associated with the trial, including: (1) certain customers will not be able to use the CLASS features Automatic Callback and Automatic Recall to reach other customers whose telephone numbers have been "ported"; (2) calls from certain NYT public phones to customers whose telephone numbers either are ported or are within one of the four trial NXX codes will not be completed; and (3) ISDN data calls made to ported telephone numbers will not be completed.

NYT estimates the total costs for the company's participation in the New York Local Number Portability Trial utilizing the MCImetro CPC solution to be between $1.2M to $1.5M for which NYT would require exogenous cost recovery. These costs involve between $250,000 to $500,000 for switch development for necessary routing translations and potential resolution of technical problems with Automatic Recall and Automatic Callback feature denial; $958,000 for manpower requirements; and $28,000

for signaling network hardware. The cost of the resolution of the problems with ISDN circuit switched data calls and calls from NYT public phones are unknown at this time.

NYT will continue to work in good faith to support the trial, however we question the long term widespread viability of the MCImetro solution. Assuming the trial participant can successfully address the issues identified above as well as other issues which may surface, NYT believes that the MCImetro solution may ultimately work in the planned trial construct with limited switches, NXXs, locations, CLECs, and customers. However, it is apparent that this solution cannot be utilized for full scale number portability deployment. Further, although the trial architecture addresses number portability among local service providers and allows CLECs to offer their customers location portability within their service areas, it does not offer such customers the same location portability if they subsequently chose to change local service providers.

In order to assist Staff in reporting back to the Commission regarding the cost and feasibility of a long term number portability data base solution, NYT is providing, in the attachment to this letter, a description of: (1) the implementation plan surrounding NYT's participation in the trial; (2) several technical difficulties associated with the trial architecture; (3) switch developmental requirements; (4) cost and feasibility impacts; and (5) the NYT view of the viability of the MCImetro solution for widespread deployment in the long term.

Very truly yours,

Attachment

New York Telephone
Local Number Portability Feasibility Report

I. The NYT Implementation Plan

On June 16, 1995, the New York Local Number Portability Trial Committee chose MCImetro as the trial data base service provider in Manhattan. Another vendor was chosen for the Rochester Telephone service territory. The MCImetro solution utilizes a three digit Carrier Portability Code (CPC) in conjunction with a dialed NXX to identify the correct local service provider. The CPC is stored against the subscriber's dialed number in a local number portability (LNP) data base and replaces the NPA for call routing purposes.

The two NYT designated trial central offices are the East 56th Street DSO (DMS 100) utilizing the 318 and 935 NXXs and East 37th Street DS1 (5ESS) utilizing the 210 and 922 NXXs. There are approximately 35,000 working numbers within these four NXXs (the "portable NXXs").

IA. Query Location

For NYT's portable NXXs, the queries will be performed by the ported-from switch (often called the terminating or donor switch) on all calls to that switch because NYT has no way of identifying whether a call has already been queried. If the call has not already been queried because, for instance, it is delivered by a non-trial participant, the receiving

carrier must query the database at the ported-from switch to determine the correct carrier to which to route the call.

IB. Query Trigger Determination Point (TDP)

The Advanced Intelligent Network (AIN) TDP will be a three, six or ten digit query. The CPC proposal states that a six or ten digit query can be performed. NYT has chosen only to utilize a six digit query since it is far more efficient than creating ten digit translations at the end office level. A TDP on a six digit (NPA-NXX) basis requires one entry on a triggering switch's translation table to serve 10,000 customers. A TDP on a ten digit basis (NPA-NXX-XXXX) requires many more entries on the translation table to serve the same 10,000 customers. For example, if one customer with the number 212-935-5000 is ported out of the 212-935 NXX the table would contain the following entries:

NUMBER	QUERY STATUS
212-935-0000 to 212-935-4999	Don't Query
212-935-5000	Query
212-935-5001 to 212-935-9999	Don't Query

As numbers are ported the table grows in size and complexity and as the querying capabilities are deployed in other switches and other networks, the data base would need to be duplicated and updated (as numbers are ported) in each switch in each network. This NPA-NXX six digit query TDP was chosen because it will be more realistic in a true LNP environment.

IC. Vacant Numbers

MCImetro's proposal recommends that all vacant numbers be loaded in the LNP data base. This would require real-time updates to the LNP data base as non-ported customers were connected and disconnected. This is unrealistic since it would require a data link from each participating local service provider's Service Order Entry system to the LNP SCP (Service Control Point). NYT recommends reserving a limited amount of numbers as vacant to be loaded in the LNP data base for testing the functionality of calls to a vacant number.

II. Feature Interaction Problems with the MCImetro Solution

The MCImetro solution can be used with either AIN technology or IN technology. NYT has chosen to use AIN technology as a platform in its network because it is the more flexible of the two and the NYT network is evolving in the direction of AIN, not IN. There are certain limitations, however, inherent in the MCImetro solution when it is used in conjunction with AIN. These are discussed below.

IIA. Automatic Recall and Automatic Callback Feature

There are feature interaction problems with the CPC solution and two features, Automatic Recall (AR or *69) and Automatic Callback (AC or *66) which will cause these two features to fail on certain intraoffice and interoffice calls. For intraoffice calls, Automatic Recall and Automatic Callback attempts to ported numbers will fail since the features do not interact with TDP. Pursuant to the current AIN standard, both features do not

interact with the TDP feature and will not attempt to forward the call to the CPC carrier. Both features only utilize intraoffice translations and fail to find an associated line equipment with the ported number. The calling party will receive a signal or announcement that the feature activation has failed.

On interoffice calls, Automatic Recall and Automatic Callback initiate Transaction Capability Application Part (TCAP) signaling messages to determine the busy or idle status of the called number. If either of these features attempt to determine the status of a ported number, the attempt will fail and the calling party will receive a signal or announcement that the attempt has failed. In discussions with vendors, it has been noted that this problem may also affect some calls to non-ported numbers as well.

To ensure that AC & AR are not lost on any calls during the trial, it has been suggested that NYT should perform a 10 digit Global Title Translation (GTT) in NYT STPs (Signal Transfer Point) to route TCAP messages to the proper serving end office. Currently GTTs are administered on a 6 digit (NPA-NXX) basis. Like 10 digit TDPs, use of 10 digit GTTs would create an unnecessary amount of administrative activity and use excessive switch capacity, if NYT were to employ 1o digit GTTs. In addition, since TCAP queries can originate from any end office and from any local service provider within the service area, this information would need to be duplicated in every STP pair that serves the area. This would require data link access to provide real-time updates from all local service providers to all the STPs serving the local area. In a widespread full

deployment of LNP this is an unmanageable process. If, in a widespread full deployment, there were no solution for the TCAP message routing problems within the SSP (Service Switching Point), it is likely that the LNP data base service provider would need to provide the 10 digit GTTs in its SCP. NYT believes it is appropriate to trial the 10 digit GTTs functionality in the SCP of the LNP database service provider on a limited basis.

Another suggestion to solve this problem has been to develop the capability for TCAP messages to ignore TDPs for intraswitch calls. One of the NYT switch vendors has already provided the cost and timeframe for this solution. However, since this solution requires 10 digit GTTs contrary to the AIN standard and the implications are not fully understood, NYT does not currently support it as a potential solution. In fact, NYT would be extremely concerned that it may cause additional problems that would only surface after the fact. NYT is also pursuing a solution with the other switch vendor.

IIB. ISDN Data Interaction Problems With 3/6/10 Digit TDPs

Like AR & AC, ISDN data interoffice calls (data on the B channel) will ignore the TDP and attempt to complete the call to the ported-from switch which will result in a failed attempt. On intraoffice ISDN data calls, the call will fail to send the call to the ported-to switch and the call will receive a denial treatment. Either way the call will not complete. This is an issue for both trial switches.