LRN Example Call

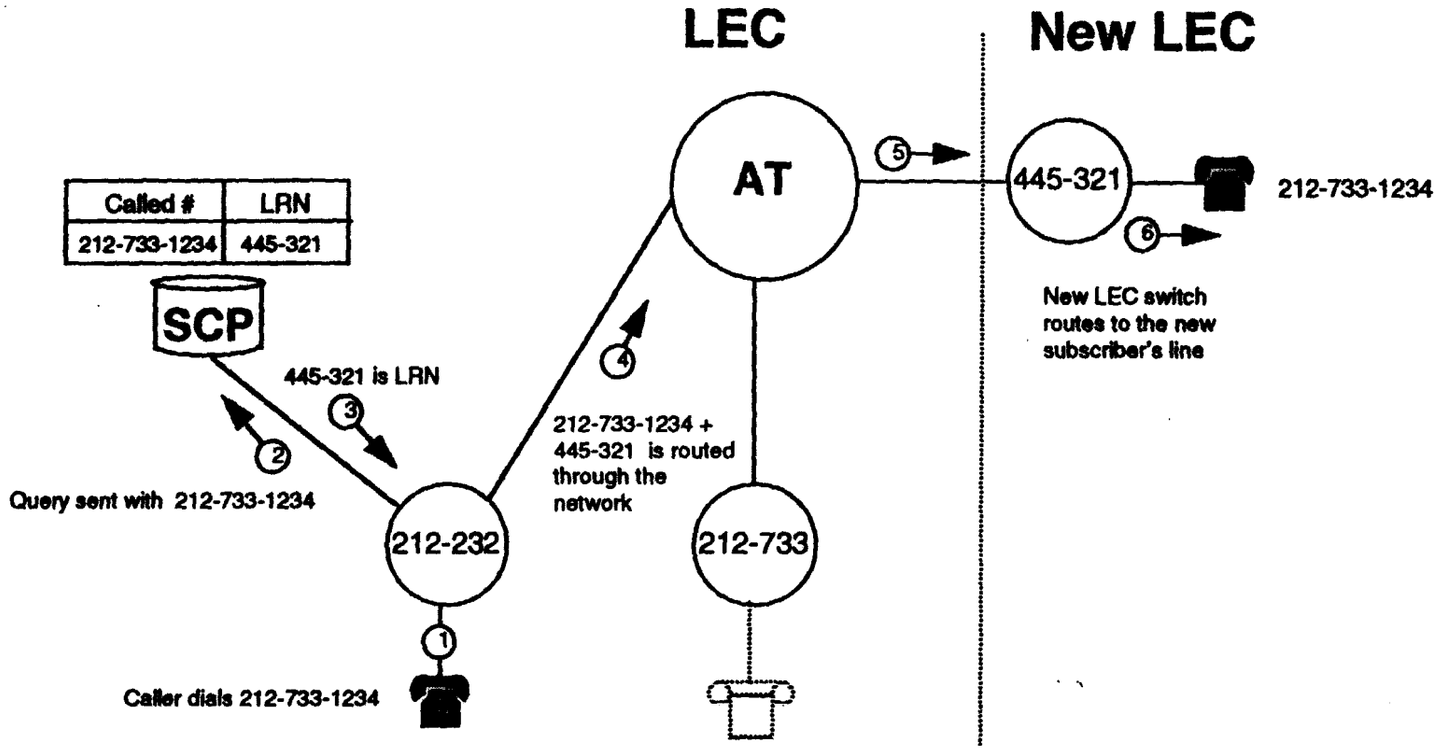

Conclusions - LRN

PROS

- Supports Location Portability
- Simplifies translations at Access Tandem/Toll Tandem
- Supports six digit GTT in STPs

CONS

- Requires major modifications ISUP
- Significant development effort - unlikely by 1997
- MF trunks cannot carry additional 6 digit LRN
- Large number of NPA-NXX translations in new entrant switches

Outline

- MCI/METRO ~~Siemens~~ - Carrier Portability Code (CPC)
- AT&T - Location Routing Number (LRN)
- **ELI/Stratus Name & Address**
- NORTEL's Name & Address

ELI/Stratus proposal

- CNA of one end-user can be NNA of another and vice-versa (requires special marking of II-digits)
- AIN query on all originating calls
- Dialed digits or CNA is required to be carried in GAP
- CNA must be national ported or regional ported significance

Conclusions - ELI/Stratus N&A

PROS

- Numbers conserved
- Supports MF trunks
- Uses six digit GTT in STPs

CONS

- Development required for enhanced use of II-digits and GAP parameter
- Requires ISUP or AIN standards changes

Outline

- MCI/METRO ~~Siemens~~ - Carrier Portability Code (CPC)
- AT&T - Location Routing Number (LRN)
- ELI/Stratus Name & Address
- **NORTEL's Name & Address**

Name and Address (N&A) Routing

NPA-NXX-XXXX → LNP db → NPA-NYY-YYYY
(Name = CNA) (Address = NNA)

Two numbering domains for LNP

- **Name - NPA-NXX-XXXX - Customer Number Address (CNA)**
  - **Customer's advertised number**
  - **Today: Name = Address**
  - **When customer moves to a different provider a new NNA is assigned in their address space**
  - **New entrant customers are assigned Name = Address**
- **Address - NPA-NYY-YYYY - Network Node Address (NNA)**
  - **Physical Address - Used by the network elements for routing**
  - **New providers switches are assigned new NXXs consistent with current number plan assignment practices**

Numbering Plan for NORTEL's Name & Address

CNA = NPA-NXX-XXXX - RBOC
NNA = INPA-NYY-YYYY - New LEC
} Unique in North America

- Each ported number needs two DNs
- The NNA returned by the SCP cannot be an existing Customer Name Address (CNA)
- Each new LEC switch is assigned a unique INPA-NYY (same approach LEC uses to add a new switch or office code today)
- North American translations used for routing (LERG still applies)

NORTEL BNR

NORTEL's N&A Call Flow

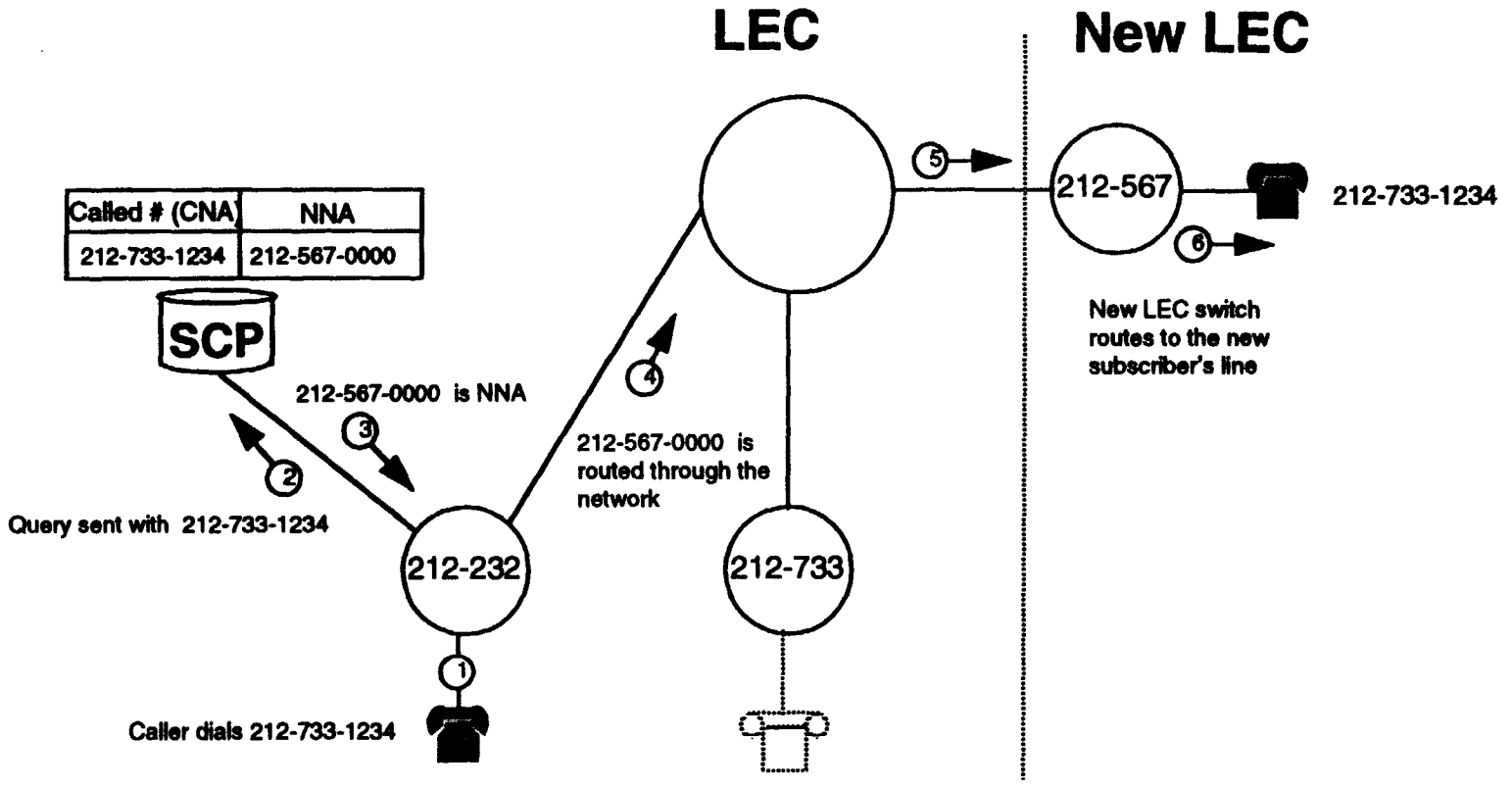

Conclusions - NORTEL N&A

PROS

- No changes to ISUP or AIN standards
- Supports MF trunks
- Uses six digit GTT in STPs
- Minimal impact on existing switch translations

CONS

- Uses two DNs per ported number

ELI/Stratus vs. NORTEL N&A

	ELI/Stratus	NORTEL
ISUP	New parameters	No changes
Trigger	Originating	Look Ahead

NORTEL's solution has less network impact

Summary of Routing Methods

Criteria	CPC	LRN	ELI	NORTEL
Existing ISUP	Yes	No	No	Yes
Service Provider Portability	Yes	Yes	Yes	Yes
Location Portability	Limited	Yes	Yes	Yes
CLID Delivery	Yes	Yes	Yes	Yes
MF Support	Yes	Limited	Yes	Yes
Auto Recall	Yes*	Yes	Yes	Limited**
Auto Callback (BY)	Yes*	Yes	Yes	Limited**

* 10-digit GTT

** Blocked per spec

Capital cost model

Intra-Lata Calls

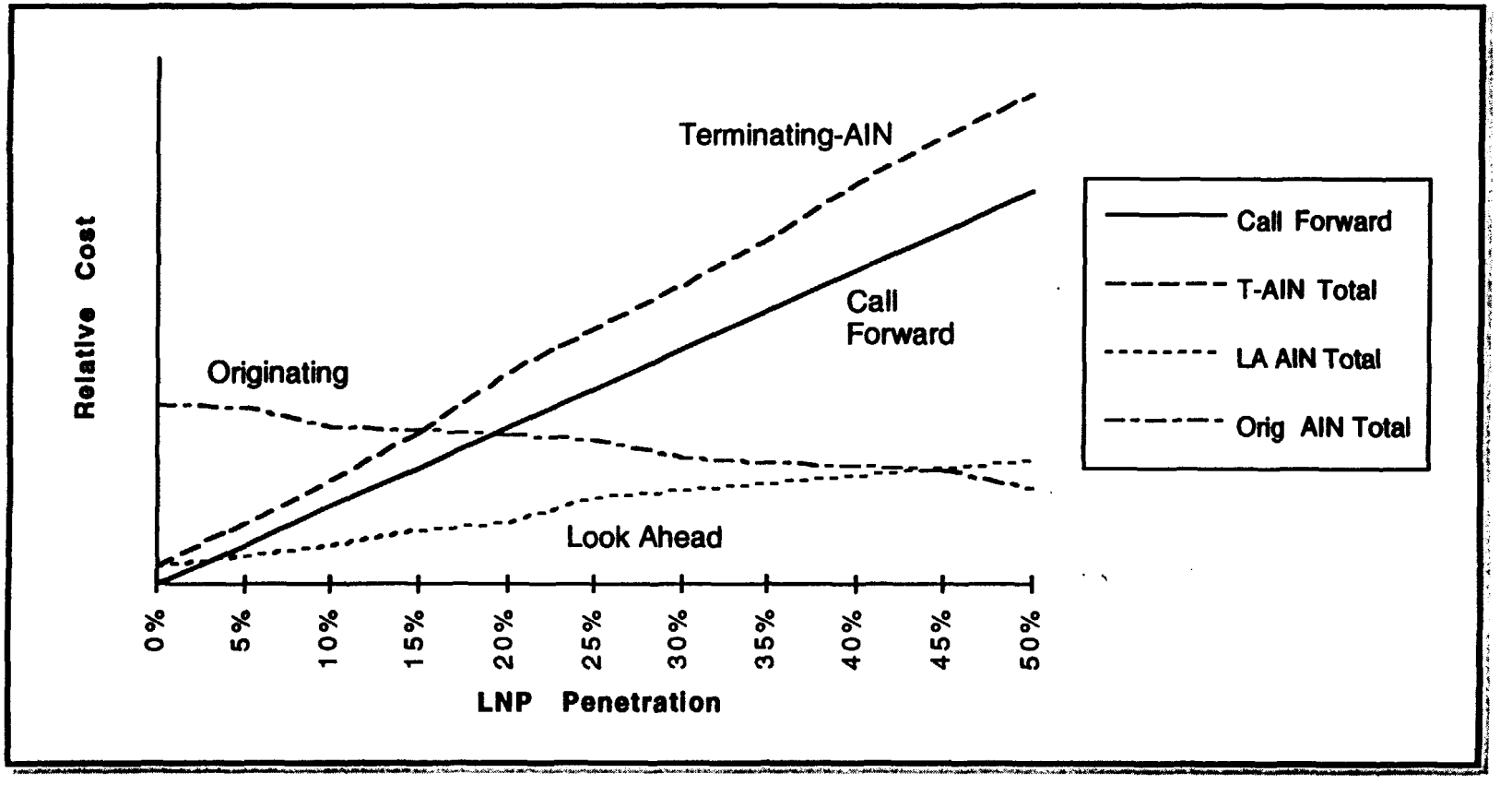

Conclusions - Cost model

- Trunk tromboning makes Call Forwarding uneconomical at moderate and high levels of penetration
- Terminating AIN has the same trunk tromboning impacts as Call Forwarding plus the additional AIN infrastructure costs
- Look Ahead is very efficient with a low start up cost
    - only queries for ported & vacant numbers
    - no trunk tromboning
- Originating AIN requires high start up costs
- Originating AIN becomes more economical than Look Ahead at extremely large levels of penetration because of the additional switch CPU costs of the Look Ahead algorithm

Next Steps

- Variances in industry LNP proposals - opportunity to contribute and influence now
- Critical that business drivers be well understood
- NORTEL is eager to work with Pacific Bell in exploring what solution best meets P*B business needs