II. Title 47 of the Code of Federal Regulations, Part 15, is proposed to be amended as follows:

1. The authority citation for Part 15 continues to read as follows:

AUTHORITY: Secs. 4, 302, 303, 304, 307 and 624A of the Communications Act of 1934, as amended, 47 U.S.C. 154, 302, 303, 304, 307 and 544A.

2. Section 15.3 is amended by adding a new paragraph (bb), to read as follows:

Section 15.3 Definitions.

* * * * *

(bb) External radio frequency power amplifier. A device which is not an integral part of an intentional radiator as manufactured and which, when used in conjunction with an intentional radiator as a signal source, is capable of amplifying that signal.

3. Part 15 is amended by adding a new Section 15.204, to read as follows:

Section 15.204 External radio frequency power amplifiers and antenna modifications.

(a) Except as otherwise described in paragraph (b) of this section, no person shall use, manufacture, sell or lease, offer for sale or lease (including advertising for sale or lease), or import, ship, or distribute for the purpose of selling or leasing, any external radio frequency power amplifier or amplifier kit intended for use with a Part 15 intentional radiator.

(b) A transmission system consisting of an intentional radiator, an external amplifier, and an antenna, may be authorized, marketed and used under this part. However, when a transmission system is authorized as a system, it must always be marketed as a complete system and must always be used in the configuration in which it was authorized.

(c) External radio frequency power amplifiers shall not be marketed as separate products. Such amplifiers shall only be marketed in the system configuration with which the amplifier was originally authorized.

(d) Only the antenna with which an intentional radiator is originally authorized may be used with the intentional radiator.

4. Section 15.247 is amended by revising paragraphs (a)(1)(i), (b), (c), (d), and (e), to read as follows:

Section 15.247 Operation within the bands 902-928 MHz, 2400-2483.5 MHz, and 5725-5850 MHz.

(a) * * *

(1) * * *

(i) For frequency hopping systems operating in the 902-928 MHz band: if the 20 dB bandwidth of the hopping channel is less than 250 kHz, the system shall use at least 50 hopping frequencies and the average time of occupancy on any frequency shall not be greater than 0.4 seconds within a 20 second period; if the 20 dB bandwidth of the hopping channel is 250 kHz or greater, the system shall use at least 25 hopping frequencies and the average time of occupancy on any frequency shall not be greater than 0.4 seconds within a 10 second period. The maximum allowed 20 dB bandwidth of the hopping channel is 500 kHz.

(ii) * * *

(2) * * *

(b) The maximum peak output power of the intentional radiator shall not exceed the following:

(1) For frequency hopping systems operating in the 2400-2483.5 MHz or 5725-5850 MHz band and for all direct sequence systems: 1 watt.

(2) For frequency hopping systems operating in the 902-928 MHz band: 1 watt for systems employing at least 50 hopping channels; and, 0.5 watts for systems employing less than 50 hopping channels, as permitted under paragraph (a)(1)(i) of this section.

(3) Except as shown below, if transmitting antennas of directional gain greater than 6 dBi are used the peak output power from the intentional radiator shall be reduced below the above stated values by the amount in dB that the directional gain of the antenna exceeds 6 dBi.

(4) Systems operating in the 5725-5850 MHz band that are used exclusively for fixed, point-to-point operations may employ transmitting antennas with directional gain greater than 6 dBi provided the peak output power of the intentional radiator is reduced by 1 dB for every 3 dB that the directional gain of the antenna exceeds 6 dBi.

(i) Fixed, point-to-point operation excludes the use of point-to-multipoint systems, omnidirectional applications, and multiple co-located intentional radiators transmitting the same information.

(ii) The operator of the spread spectrum intentional radiator is responsible for ensuring that the system is used exclusively for fixed, point-to-point operations. The instruction manual furnished with the intentional radiator shall contain language in the installation instructions informing the operator of this responsibility.

(iii) Systems operating under the provisions of (b)(4) of this section shall not be market to, or used by, the general public. The marketing and use of these systems shall be restricted to commercial and industrial applications. The responsible party, as defined in Section 2.909 of this Chapter, is responsible for ensuring compliance with this marketing requirement.

(iv) The 3 dB beamwidths, in both the horizontal and vertical planes, of antennas employed under the provisions of (b)(4) of this section shall not differ by more than a factor of two.

(v) Systems operating under the provisions of (b)(4) of this section shall employ positive means to ensure that the public is not exposed to excessive radio frequency energy levels. The method(s) used to prevent such exposure shall be described in the application for the grant of equipment authorization submitted to the Commission.

(c) In any 100 kHz bandwidth outside the frequency band in which the spread spectrum intentional radiator is operating, the radio frequency power that is produced by the intentional radiator shall be at least 20 dB below that in the 100 kHz bandwidth within the band that contains the highest level of the desired power, based on either an RF conducted or a radiated measurement. Attenuation below the general limits specified in Section 15.209(a) is not required. In addition, radiated emissions which fall in the restricted bands, as defined in Section 15.205(a), must also comply with the radiated emission limits specified in Section 15.209(a) (see Section 15.205(c)).

(d) For direct sequence systems, the peak power spectral density conducted from the intentional radiator to the antenna shall not be greater than 8 dBm in any 3 kHz band during any time interval of continuous transmission.

(e) The processing gain of a direct sequence system shall be at least 10 dB. The processing gain represents the improvement to the received signal-to-noise ratio, after filtering to the information bandwidth, from the spreading/despreading function. The processing gain may be determined using one of the following methods:

(1) As measured at the demodulate output of the receiver: the ratio in dB of the signal-to-noise ratio with the system spreading code turned off to the signal-to-noise ratio with the system spreading code turned on.

(2) As measured using the CW jamming margin method: a signal generator is stepped in 50 kHz increments across the passband of the system, recording at each point the generator level required to produce the recommended Bit Error Rate (BER). This level is the jammer level. The output power of the intentional radiator is measured at the same point. The jammer to

signal ratio (J/S) is then calculated, discarding the worst 20% of the J/S data points. The lowest remaining J/S ratio is used to calculate the processing gain, as follows: Gp = (S/N)o + Mj + Lsys, where Gp = processing gain of the system, (S/N)o = signal to noise ratio required for the chosen BER, Mj = J/S ratio, and Lsys = system losses. Note that total losses in a system, including intentional radiator and receiver, should be assumed to be no more than 2 dB.

* * * * *

APPENDIX C

FEDERAL COMMUNICATIONS COMMISSION

Equipment Authorization Division
7435 Oakland Mills Road
Columbia, MD 21046
Telephone: (301) 725-1585
Facsimile: (301) 344-2050

Guidance on Measurements for Direct Sequence Spread Spectrum Systems

Part 15 of the FCC Rules provides for operation of direct sequence spread spectrum transmitters. Examples of devices that operate under these rules include radio local area networks, cordless telephones, wireless cash registers, and wireless inventory tracking systems.

The Commission frequently receives requests for guidance as to how to perform measurements to demonstrate compliance with the technical standards for such systems. No formal measurement procedure has been established for determining compliance with the technical standards. Such tests are to be performed following the general guidance in Section 15.31 of the FCC Rules and using good engineering practice. The following provides information on the measurement techniques the Commission has accepted in the past for equipment authorization purposes. Alternative techniques may be acceptable upon consultation and approval by the Commission staff. The information is organized according to the pertinent FCC rule sections.

Section 15.31(m): This rule specifies the number of operating frequencies to be examined for tunable equipment.

Section 15.207: Power line conducted emissions. If the unit is AC powered, an AC power line conducted test is also required per this rule.

Section 15.247(a)(2): Bandwidth. Make the measurement with the spectrum analyzer's resolution bandwidth (RBW) = 100 kHz. In order to make an accurate measurement, set the span >> RBW.

Section 15.247(b): Power output. This is an RF conducted test. Use a direct connection between the antenna port of the transmitter and the spectrum analyzer, through suitable attenuation. Set the RBW > 6 dB bandwidth of the emission or use a peak power meter.

Section 15.247(c): Spurious emissions. The following tests are required :

(1) RF antenna conducted test: Set RBW = 100 kHz, Video bandwidth (VBW) > RBW, scan up through 10th harmonic. All harmonics/spurs must be at least 20 dB down from the highest emission level within the authorized band *as measured with a 100 kHz RBW.*

(2) Radiated emission test: Applies to harmonics/spurs that fall in the restricted bands listed in Section 15.205. The maximum permitted average field strength is listed in Section 15.209. A pre-amp (and possibly a high-pass filter) is necessary for this measurement. For measurements above 1 GHz, set RBW = 1 MHz, VBW = 10 Hz, Sweep: Auto. If the emission is pulsed, modify the unit for continuous operation, use the settings shown above, then correct the reading by subtracting the peak-average correction factor, derived from the appropriate duty cycle calculation. See Section 15.35(b) and (c).

Section 15.247(d): Power spectral density. Locate and zoom in on emission peak(s) within the passband. Set RBW = 3 kHz, VBW > RBW, sweep = (SPAN/3 kHz) e.g., for a span of 1.5 MHz, the sweep should be $1.5 \times 10^6 \div 3 \times 10^3 = 500$ seconds. The peak level measured must be no greater than +8 dBm. If external attenuation is used, don't forget to add this value to the reading. Use the following guidelines for modifying the power spectral density measurement procedure when necessary.

- For devices with spectrum line spacing greater than 3 kHz no change is required.
- For devices with spectrum line spacing equal to or less than 3 kHz, the resolution bandwidth must be reduced below 3 kHz until the individual lines in the spectrum are resolved. The measurement data must then be normalized to 3 kHz by summing the power of all the individual spectral lines within a 3 kHz band (in linear power units) to determine compliance.
- If the spectrum line spacing cannot be resolved on the available spectrum analyzer, the noise density function on most modern conventional spectrum analyzers will directly measure the noise power density normalized to a 1 Hz noise power bandwidth. Add 30 dB for correction to 3 kHz.
- Should all the above fail or any controversy develop regarding accuracy of measurement, the Laboratory will use the HP 89440A Vector Signal Analyzer for final measurement unless a clear showing can be made for a further alternate.

Section 15.247(e): Processing Gain. The Processing Gain may be measured using the CW jamming margin method. Figure 1 shows the test configuration. The test consists of stepping a signal generator in 50 kHz increments across the passband of the system. At each point, the generator level required to produce the recommended Bit Error Rate (BER) is recorded. This level is the jammer level. The output power of the transmitting unit is measured at the same point. The Jammer to Signal (J/S) ratio is then calculated. Discard the worst 20% of the J/S data points. The lowest remaining J/S ratio is used when calculating the Processing Gain.

In a practical system, there are always implementation losses which degrade the performance below that of an optimal theoretical system of the same type. Losses occur due to non-optimal filtering, lack of equalization, LO phase noise, "corner cutting in digital processing", etc. Total losses in a system, including transmitter and receiver, should be assumed to be no more than 2 dB.

The signal to noise ratio for an <u>ideal</u> non-coherent receiver is calculated from:

(1) $$Pe = \tfrac{1}{2} e^{(-\frac{1}{2}(S/N)o)}$$

where : Pe = probability of error (BER)
$(S/N)o$ = the required signal to noise ratio at the receiver output for a given received signal quality

This is an example. You should use the equation (or curve) dictated by your demodulation scheme.

Ref.: Viterbi, A. J. <u>Principles of Coherent Communications,</u> (New York: McGraw-Hill 1966), Pg. 207

Using equation (1) shown above, calculate the signal to noise ratio required for your chosen BER. This value and the measured J/S ratio are used in the following equation to calculate the Processing Gain (Gp) of the system.

$$Gp=(S/N)o+Mj+Lsys$$

where: $(S/N)o$ = Signal to noise ratio
Mj = J/S ratio
$Lsys$ = System losses.

Ref.: Dixon, R., <u>Spread Spectrum Systems</u> (New York: Wiley, 1984), Chapter 1.

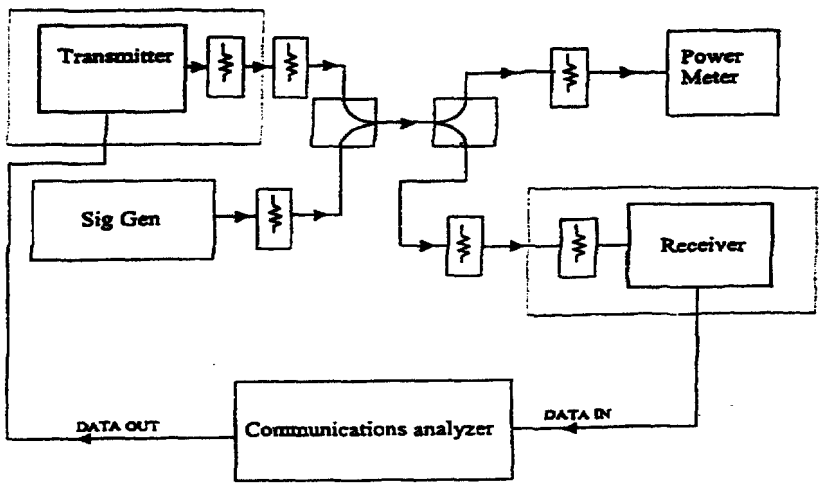

Jamming Test Setup
Figure 1

ALTERNATIVE TEST PROCEDURES

If antenna conducted tests cannot be performed on this device, radiated tests to show compliance with the various conducted requirements of Section 15.247 are acceptable. As stated previously, a pre-amp must be used in making the following measurements.

1) Calculate the transmitter's peak power using the following equation:

$$E=\frac{\sqrt{30PG}}{d}$$

Where: E is the measured maximum field strength in V/m utilizing the widest available RBW.
G is the numeric gain of the transmitting antenna over an isotropic radiator.
d is the distance in meters from which the field strength was measured.
P is the power in watts for which you are solving:

$$P=\frac{(Ed)^2}{30G}$$

2) Measure the power spectral density as follows:

A. Tune the analyzer to the highest point of the maximized fundamental emission. Reset the analyzer to a RBW = 3 kHz, VBW > RBW, span = 300 kHz, sweep = 100 sec.

B. From the peak level obtained in (A), derive the field strength, E, by applying the appropriate antenna factor, cable loss, pre-amp gain, etc. Using the equation listed in (1), calculate a power level for comparison to the +8 dBm limit.