and continued in the present test program, from the operation of WPAR, Hickory, North Carolina, on 88.1 MHz with effective radiated power (ERP) of 10 kilowatts and WNSC, Rock Hill, South Carolina, on 88.9 MHz with ERP of 100 kilowatts. New sources of FM interference, not encountered previously, were from WGWG, Boiling Springs, North Carolina, that began operation on 88.3 MHz, with ERP of 50 kilowatts in February, 1995, and from WDAV, Davidson, North Carolina, operating on 89.9 MHz with ERP of 100 kilowatts, that recently increased its height above average terrain from 107 meters to 246 meters. The strong FM signals affect channel 6 testing in two ways. The most obvious is the observable interference to both picture and sound. In addition, the strong signals in the near vicinity of channel 6 must be attenuated to avoid overloading the receiving RF preamplifier and measuring test equipment in the field truck. That attenuation penalizes channel 6 performance, particularly NTSC. Co-channel interference, similar to that noted in the 1994 tests, was encountered during the Phase I tests as well.

With respect to the channel 6 performance evaluation, emphasis must be given to the fact that testing has been carried out at transmission power levels only one-tenth of (10 dB below) those expected to be employed in practice. To avoid interference to licensed stations, NTSC peak visual ERP on channel 6 had to be limited to 10 kilowatts instead of the 100 kilowatts normally employed. ATV average power was held to 12 dB below NTSC peak visual power to preserve the ratio of analogue-to-digital transmission that laboratory test data indicated to provide equivalent NTSC/ATV coverage. If ATV power were increased by 10 dB, as to be expected in practice, interfering sources would be substantially less effective in producing impairments.

This section of the field test report relates to the procedures and results of Phase I of the terrestrial transmission tests. Results of the cable testing are reported in Section 2. Phase II, providing an expanded data base of system performance under a range of propagation conditions, including additional in-home viewing of the ATV signal and adjacent channel interference sensitivity under field conditions, will be the subject of a further report.

II. FIELD TEST PLAN

The transmission facilities near Charlotte, North Carolina, as described in the 1994 test report, were employed for the Phase I tests described herein. Those facilities were supplemented by the equipment components necessary to permit transmission of a complete video, audio and ancillary ATV television signal. The signal source used was a videotape on which the encoded compressed video and audio ATV material were recorded. The tape was played through a D3 machine. Either the channel 53 or channel 6 transmitter was VSB-modulated, as required. An HDTV monitor and stereo sound system were added in the field truck, permitting evaluation of picture and sound.

Block diagrams showing the interconnection of the transmitter building equipment and the field truck are shown in Figures 1 and 2 respectively.

Locations employed for observations were a subset of those used in the transmission subsystem testing performed in 1994, except for some substitutions in the in-home portion of the program. Forty of the 199 sites used in the transmission subsystem testing were visited during Phase I testing. The site selection was from the entire coverage area, including close-in and far out locations in grids, clusters, or on radials. In addition to the forty sites, the plan included making observations at up to twenty in-home sites. A requirement to limit the Phase I testing to four weeks permitted visiting only ten of the in-home sites. An additional ten are to be visited during the Phase II testing. Appendix A contains the tabulated data for all fifty measurement locations.

Selection of the particular sites to be included in Phase I was based on the channel 53 subsystem performance measured in 1994. Specifically, selection was based on the margin measured by adding noise to the received signal until the threshold BER of 3×10^{-6} was encountered. The plan called for ten sites with margins of 20 dB or more, fifteen sites with margins between 0 and 10 dB, and fifteen sites with no margin but within 6 dB of threshold. Only eight sites, from the subsystem testing, could be found that fell into the last category. Accordingly, the category of 0 to 10 dB margin was expanded to twenty-two sites in order to preserve the objective of a total of forty. Since the site selection was based upon subsystem performance on channel 53, use of the same sites for channel 6 did not reflect the same grouping of performance margins.

As in the subsystem testing, NTSC peak visual effective radiated power (ERP) was 10 kW on channel 6 and 500 kW on channel 53. ATV average ERP was nominally 12 dB below NTSC peak (0.63 kW on channel 6 and 31.6 kW on channel 53). At locations with unusable ATV reception at normal power, the transmitted ATV average power was increased by 6 dB and new observations were made.

The transmitters were operated and maintained by a project employee, with a Grand Alliance representative always on hand to oversee the operation of the ATV prototype system. Field truck personnel included a supervisor, truck driver, project technician, a rotating representative from the FCC , and a Grand Alliance representative responsible for operation of the receiving portion of the prototype equipment. Observers responsible for reporting results included the supervisor, technician and FCC representative. Visitors from the Field Testing Task Force, broadcasting and the Grand Alliance were often present as observers of the process.

Each morning, prior to departure, thorough calibration checks were made of both transmitting and field truck receiving apparatus. A limited number of calibrations were repeated at the end of the day to provide assurance that no change of significance had been made that might impact on the conclusions derived from the observations and measurements made during the course of the day.

At each of the forty cluster, grid and radial locations, observations and measurements were made of NTSC and ATV performance on both channel 53 and channel 6. For rating the impairment characteristics of the picture, the same sequence (one minute) as used for that purpose in the laboratory was used in the field. In addition, to provide viewing experience over a longer (ten minute) period and for a variety of broadcast material, a longer sequence of images had been prepared in the laboratory and recorded in compressed form on tape for playback on a D3 machine. The images were accompanied by sound.

In addition to the short exposure to the sequence used for the CCIR impairment rating, evaluation of ATV performance under field conditions required the longer term period of observing both video and audio performance. Varying multipath, a condition encountered frequently, and particularly at UHF, causes signal strength to vary in a frequency dependent way. The result can be one or more stationary or moving field strength minima in the six megahertz transmission band, or the imposition of a tilt in the signal strength across the band. Although the same phenomenon is present in NTSC transmission, the effect is much different from that in ATV transmission. Depending on the depth of the minima and the rapidity of their movement, the ATV signal may be destroyed in the presence of short ghosts if the effect is beyond the capability of the adaptive equalizer and error correction/concealment to accommodate. On the other hand, unless a minimum falls at the video carrier, audio carrier or color subcarrier, the NTSC picture and sound may be virtually unaffected by short ghosts of

moderate strength or less. The picture may be somewhat "soft" or color hue and saturation changed, but the picture and sound are still there and the action can be followed.

Each data frame of the Grand Alliance system is divided into 626 "segments or packets" of data, each 77.3 microseconds in duration. The Reed-Solomon encoder used in the VSB transmission system inserts redundant bytes in each segment that the decoder employs to detect segment errors. A display panel, included in the VSB prototype receiver, shows continuously the segment error rate (SER) in errors per second. During the 10-minute observation period, the number of occurrences of measurable SER (called SER "hits") was recorded by an observer who maintained a constant watch of the error count display. In the laboratory, where steady state conditions could be made to prevail, the threshold of visibility for picture impairments was found to exist when the SER became 2.5 errors per second, corresponding also to a bit error rate of 3×10^{-6} errors per second. However, the presence of intermittent segment errors is not reflected, necessarily, in recognizable picture or sound impairments. In fact, field experience showed that in most instances where a few "hits" of measurable SER occurred, no corresponding video and/or audio impairments were noted. In order to have satisfactory reception, the number of measurable segment error hits during the extended viewing period had to be less than six.

The nature of variable multipath is such that a 10-minute observation period is a good measure of the acceptability of the ATV performance. If few or no impairments show up during that 10 minutes, a strong probability exists that noticeable impairments will not be of such frequency as to render the ATV performance unacceptable. Alternatively, objectionable performance during that 10 minutes suggests that the signal cannot be relied upon for consistently satisfactory viewing.

Throughout the period of viewing, audio performance was also being judged. The field truck environment is not one conducive to definitive sound quality evaluations, but reasonable judgments can be made as to whether or not the sound suffers transmission impairment. An important consideration is whether sound impairments correlate with picture impairments. Loss of satisfactory sound before picture loss would be contrary to the NTSC experience. Field observations indicate that major video and audio impairments do appear to correlate --- a reasonable expectation in a digital system. There were a few instances, however, when minor visual impairments occurred but there were no audible impairments.

An important guide to ATV signal reliability is provided by the recorded equalizer tap energy in conjunction with the margin to failure. High tap energy indicates that the adaptive equalizer is compensating for the large multipath encountered at the location. When that high tap energy is coupled to only a modest white noise margin, reception at the location can be expected to be inconsistent. On the other hand, even if the margin is not high, but neither is the tap energy high, the location is likely to be one with reliably good reception.

With the field truck at the predetermined location or, if the previously used location had become unavailable for any reason, from the nearest suitable spot, the antenna was raised to the 30-foot height, was adjusted for best NTSC picture, and the NTSC performance was rated on the basis of the CCIR five-point impairment rating scale with and without ghost canceling. Comments relative to video and audio impairments were noted. Also recorded was the receiver input video peak of sync signal level, noise floor, carrier-to-noise level and video signal-to-noise level. From the received signal level, system gain, antenna gain and attenuator setting, a calculation was made of the field strength at the antenna.

Following the NTSC tests, the antenna was adjusted for best ATV signal reception after checking (by radio) with the transmitter operator to confirm operation at the desired

power level. The receiver input level and carrier-to-noise ratio with and without added white noise were measured, allowing the margin to video/audio failure to be determined. Observing the appropriate one-minute test sequence, the ATV picture was rated using the five-point CCIR impairment rating scale. (Ratings at half steps were permitted if, in the opinion of the observers, full step ratings did not appear to represent the observers subjective evaluation.) Pictures were then observed and audio listened to for a ten-minute period. Comments were logged noting the nature of any impairments discerned. During that ten-minute interval, the number of impairment hits and SER hits were noted. Also recorded were the signal-to-noise ratio at both input and output of the equalizer, the equalizer tap energy.

Although channel 6 tests, as well as channel 53 tests, were made at all forty locations, the NTSC observation time was limited on channel 6 to avoid the potential for interference to cable channel 6. Despite that precaution, two complaints of interference received by WCNC-TV, the station carried by cable on channel 6, stimulated a demand that further testing on channel 6 cease. Consequently, the ten in-home tests conducted in Phase II were made using channel 53 only.

At locations where residents indicated a willingness to cooperate, the field truck was placed where the antenna could be erected to the 30-foot height, and as close as possible to the residence. Using the householder's equipment, the availability of in-home NTSC reception was confirmed. Then, to provide uniformity of observation, the project's indoor antenna and receiver were substituted for the householder's equipment. A circuit was completed from the indoor antenna to the field truck through an amplifier and transmission line of known characteristics. The NTSC receiver input sync peak level, video signal-to-noise ratio, noise floor, and impairment levels were recorded, together with appropriate comments for inputs from both the indoor antenna and the outdoor antenna at thirty feet. Block diagrams showing the indoor installation is depicted in Figure 3.

After a transmitter change to ATV at the correct level, the ATV receiver input level was measured, the margin-to-white-noise failure was measured, the CCIR impairment level and carrier-to-noise ratio were determined, and equalizer input and output signal-to-noise ratio and tap energy recorded for inputs from both the indoor antenna and outdoor antenna at thirty feet. The effect of persons moving in the room in the vicinity of the receiving antenna was noted.

III. ANALYSIS OF TEST RESULTS

Unlike the 1994 transmission subsystem performance tests, the following analysis of test results is not to be construed as applicable to the entire Charlotte survey area. In 1994, measurements were made along radials and in grids at sites determined solely on their location, thus permitting a proper statistical analysis. The subset of sites used in 1995 was chosen deliberately to have a preponderance of "problem sites where good NTSC or ATV reception could not be assured. Analyses that follow relate the 1995 test results to those obtained in 1994 at the same locations.

As an aid in validating the performance of the Grand Alliance system in the field, the analysis is divided into two parts. The first part examines the ATV service performance relative to NTSC, the second examines the performance of the ATV system using a number of standard parameters commonly used in the field. The evaluation also attempts to correlate these test results with the 1994 transmission subsystem tests.

Unlike the 1994 transmission subsystem tests where the principal measure of performance of the ATV transmission was based on achieving a bit-error ratio (BER) of $3x10^{-6}$ or

better for satisfactory reception for a period of one minute, two new criteria were added to determine the full system performance of the ATV system. The first, an objective measurement criterion, is the segment error rate, the second is the subjective evaluation of the 10-minute extended viewing segment. Satisfactory reception for ATV is defined for the purpose of this analysis as no measurable SER hits (SER = 0) and/or a determination by subjective evaluation of satisfactory reception during the 10-minute viewing segment. For comparison of the 1995 data results to that of 1994, the original criteria of $3x10^{-6}$ during the one-minute viewing segment was recorded. For NTSC, the same yardstick as used in 1994 -- CCIR impairment rating 3 or better for one minute -- was selected to define satisfactory reception.

As previously mentioned, in the laboratory, where steady state conditions could be made to prevail, the threshold of visibility for picture impairments was found to exist when the SER became 2.5 errors per second, corresponding also to a bit error rate of about 3×10^{-6} errors per second. In the field, however, subjective evaluation of the image and sound has shown that in most instances where a few "hits" of measurable SER occurred, no corresponding video and/or audio impairments were noted. In order to have satisfactory reception, the number of measurable segment error hits during the extended viewing period had to be less than six.

A. SERVICE AVAILABILITY

1. NTSC Service Availability

To assess the NTSC service availability at the subset of 1994 locations, the same subjective evaluation as used for the 1994 transmission subsystem was used. Evaluation consisted principally of visual evaluation of the received television picture by three expert observers rating the overall picture quality using a CCIR impairment scale, and Experts' Observations and Commentaries (EO&C) to evaluate audio degradation. To judge the picture quality and impairment level, the expert observers each evaluated the image and sound quality and arrived at a rating by consensus. Assessment was made to the nearest half step on the five point scale, as acceptable practice in CCIR studies. Table 1 presents the impairment statistics for both channels (6 and 53) for all fifty outdoor measurement locations (forty selected sites and ten sites adjacent to residences where in-home tests were made). The sample size for channel 6 is limited to 48 sites because of reported interference to cable.

Table 1 reveals that picture impairments were far more prevalent in VHF than UHF. These results are consistent with the earlier 1994 results where the transmitted power (10 dB below maximum allowable power) and the prevalence of high impulse noise and other interference sources within the service area contributed to the poor channel 6 performance.

Table 1

Impairment Assessment of NTSC Outdoor Measurement Sites*

(Channels 6 & 53)

CCIR IMPAIRMENT SCALE	Channel 6 (%)	Channel 53 (%)
5 Imperceptible	2.0	0
4 Perceptible, But Not Annoying	14.6	32
3 Slightly Annoying	12.5	32
2 Annoying	29.2	28
1 Very Annoying	31.3	8
Unusable (No Picture)	10.4	0

*** NTSC peak power was 10 dB below the maximum allowable power.**

2. ATV Service Availability

As previously stated, the service availability of the ATV system at the subset of 1994 locations was determined using the two criteria described earlier. The first criterion, a somewhat conservative one, is based on objective measurement and determined by continuously monitoring the segment error rate for no error (SER = 0) during the 10-minute observation period. The second is based on subjective evaluation of the picture and sound for visible or audible impairments during the same viewing period regardless of the number of measurable SER "hits". Table 2 presents the percentage of both channels (6 and 53) with satisfactory performance for all fifty outdoor measurement locations (forty selected sites and ten adjacent to in-home sites). Here again, the sample size for channel 6 is limited to 48 sites because of reported interference to a cable system.

Table 2

Service Availability of ATV Outdoor Measurement Sites*

(Channels 6 & 53)

ATV SERVICE AVAILABILITY	Channel 6 (%)	Channel 53 (%)
Percent of Locations with Satisfactory Reception (SER = 0)	25	74
Percent of Locations with Satisfactory Reception (Subjective)	46	88

*** NTSC peak power was 10 dB below maximum allowable power.**
The ATV average power level was 12 dB below NTSC peak power.

A review of Table 2 reveals that the overall service availability is higher for UHF than for VHF. Here again, the poor channel 6 performance is attributed to the prevalence of high impulse noise within the service area and other interference sources, such as the interference to channel 6 reception from close-by noncommercial educational FM stations and low level interference from cable installations. Also note that the satisfactory reception criteria using subjective viewing is somewhat higher, especially at VHF which consistently had bursts of impulse noise.

3. Comparison of NTSC and ATV Service Performance

Tables 3 and 4 presents the percentages of locations, NTSC and ATV, respectively, where satisfactory reception was achieved for both channels. Satisfactory reception for NTSC was defined as CCIR grade 3 or better, while satisfactory reception for ATV was determined using objective measurements and subjective observations described earlier. The sample size is 50 sites for channel 53 and 48 sites for channel 6.

Table 3

Relative Service Performance of NTSC and ATV*
[ATV SER = 0, NTSC CCIR 3 or better]
(Channels 6 & 53)

SERVICE PERFORMANCE	NTSC		ATV	
	Channel 6 (%)	Channel 53 (%)	Channel 6 (%)	Channel 53 (%)
Percent of Locations with Satisfactory Reception	29.1	64.0	25.0	74.0

* NTSC peak power was 10 dB below maximum allowable power.
The ATV average power level was 12 dB below NTSC peak power.

Table 4

Relative Service Performance of NTSC and ATV*
[Subjective evaluation]
(Channels 6 & 53)

SERVICE PERFORMANCE	NTSC		ATV	
	Channel 6 (%)	Channel 53 (%)	Channel 6 (%)	Channel 53 (%)
Percent of Locations with Satisfactory Reception	29.1	64.0	46.0	88.0

* NTSC peak power was 10 dB below maximum allowable power.
The ATV average power level was 12 dB below NTSC peak power.

Using the objective criteria. Table 3 shows that the ATV service performance statistics for channel 53 are slightly higher than for NTSC and the same as NTSC for channel 6. On the other hand, using the subjective evaluation criteria, Table 4 shows that the ATV service performance statistics for both channels 6 and 53 are moderately higher than for NTSC. These results are consistent with the earlier findings (1994 transmission subsystem test) which determined that the service availability on channel 53 is far better than channel 6 for both NTSC and ATV.

B. COMPARISON WITH 1994 TRANSMISSION SUBSYSTEM RESULTS

1. Comparison of NTSC Service Availability

To compare the NTSC service availability of the 1994 transmission subsystem testing with the current measurement program, data from the newly measured sites (40 outdoor sites) were compared with the results of the same sites measured in 1994. Table 5 presents a side-by-side comparison of the NTSC impairment statistics for both channels 6 and 53. The sample size for channel 6 is limited to 33 sites because of the lack of comparable 1994 NTSC measurement data.

Table 5

Comparison of Overall Impairment Assessment of NTSC Measurements*

(Channels 6 & 53)

CCIR IMPAIRMENT SCALE	Channel 6 (%) n = 33		Channel 53 (%) n = 40	
	1994	1995	1994	1995
5 Imperceptible	0.0	0.0	0.0	0.0
4 Perceptible, But Not Annoying	0.0	6.1	5.0	22.5
3 Slightly Annoying	12.1	15.2	25.0	35.0
2 Annoying	24.2	24.2	50	32.5
1 Very Annoying	60.6	39.4	20.0	10.0
Unusable (No Picture)	3.0	15.2	0.0	0.0
Satisfactory Reception (Grade 3 or Better)	**12.1**	**21.3**	**30.0**	**57.5**

* NTSC peak power was 10 dB below the maximum allowable power.

A comparison of the 1994 and 1995 data in Table 5 reveals that the NTSC picture impairment statistics were similar for VHF and somewhat different for UHF. These findings are consistent with the propagation conditions normally encountered at VHF and UHF. At VHF, where signal variations for both time and location are small, repeatability of results for different measurement periods are likely. On the other hand, at UHF where signal variations for time, location and multipath are more prevalent, repeatability of results for different

measurement periods is less likely. Moreover, the poor performance on channel 6 suggests that the interference conditions encountered in 1994, such as the impulse noise, etc., were also encountered in 1995.

2. Comparison of ATV Service Availability

Unlike NTSC, the overall service availability of the ATV system for the 1994 data was determined using different criterion than the current measurements. In the transmission subsystem testing, where no images were transmitted, the bit-error ratio was used as the principal measure of performance. In the full system testing, where full video and audio were present, the service availability was determined using both objective (SER) and subjective evaluation criteria. As in the 1994 subsystem tests, the margin was measured using SER over a one-minute time frame, thus providing a good comparison between the two tests. Also, additional testing was conducted in 1995 that extended the evaluation from one-to-ten minutes for both the objective measurements (SER hits) and subjective observations. The lengthened testing time allowed short term signal variability to be evaluated.

Tables 6 and 7 present a comparison of the percentages of the overall service availability for 1994 versus 1995 for channels 6 and 53 respectively. Here again, the sample size is 40 sites for channel 53 and only 33 sites for channel 6.

Table 6

Comparison of Service Availability of ATV Measurements*

(Channel 6)

ATV SERVICE AVAILABILITY	Channel 6 n=33			
	1994 (BER < 3 x 10^{-6}) 1-minute	1995 (BER < 3 x 10^{-6}) 1-minute	1995 (SER = 0) 10-minute	1995 (Subjective) 10-minute
Percent of Locations with Satisfactory Reception	72.7	60.6	21.2	39.4

*** NTSC peak power was 10 dB below maximum allowable power.**
The ATV average power level was 12 dB below NTSC peak power.

Table 7
Comparison of Service Availability of ATV Measurements*

(Channel 53)

ATV SERVICE AVAILABILITY	Channel 53 n = 40			
	1994 (BER < 3 x 10^{-6}) 1-minute	1995 (BER < 3 x 10^{-6}) 1-minute	1995 (SER = 0) 10-minute	1995 (Subjective) 10-minute
Percent of Locations with Satisfactory Reception	85	90	70	85

*** NTSC peak power was 10 dB below maximum allowable power.**
The ATV average power level was 12 dB below NTSC peak power.

A comparison between the 1994 and 1995 data in Table 6 reveals that for comparable 1-minute BER measurements, the channel 6 service availability was slightly worse in 1995, while the 10-minute test results showed little correlation with last year. In contrast, Table 7 shows a high degree of correlation in the channel 53 service availability statistics between the 1994 BER measurements and the 1995 objective (SER) and/or subjective evaluation measurements. These findings are important in that they suggest that the results of the 1994 tests, using bit error rate as the criterion for performance, were a reliable measure of performance of the GA system at UHF.

Given the limited sample size at VHF and the prevalence of the impulse noise in Charlotte and the use of a reduced transmitted signal power (-10 dB), the results obtained so far are inconclusive. Further measurements are needed before any meaningful conclusion can be drawn about the use of VHF.

C. ATV SYSTEM PERFORMANCE

The data collected for ATV included a number of parameters that are useful not only in evaluating ATV service availability but also in determining the performance of the ATV system under various interference and impairment conditions. For example, equalizer tap energy statistics could tell how hard the equalizer is working to correct multipath conditions; ATV margin data could tell how far the signal level may vary before ATV reception is lost due to weak signals, and changes in ATV noise floor, C/N, etc. A detailed assessment of some of these parameters is presented below.

1. Field Strength Statistics versus SER

To evaluate ATV service availability under different signal level conditions (i.e., strong, moderate and weak), ATV signal level measurements were grouped in 10 dB increments and sorted by increasing field strength level . Based on laboratory data and agreed upon technical planning factors, a field strength level of 43.5 dBuV/m was determined to be equivalent to the threshold of reception for ATV. Table 8 presents a comparison of field

strength level groupings versus service availability based on objective (SER) and subjective observations for channel 53.

Table 8
Channel 53 Field Strength Level versus Service Availability

Field Strength Level (dBuV/m)	Channel 53 Number of Sites Measured n = 50		
	Field Strength	SER = 0	Subjectively Satisfactory
less than 43.5	7	1	2
43.6 to 54.0 (weak)	15	10	14
54.1 to 64.0 (moderate)	9	9	9
Greater than 64.0 (strong)	19	17	19

The data in Table 8 show a good correlation between field strength groupings and ATV service availability using objective and subjective evaluation of the picture and sound. In weak or at signal levels below the predicted threshold of error-free reception, satisfactory reception was achieved in many cases. Failure in ATV reception was principally due to the combination of weak signal and strong (dynamic) multipath conditions. Based on the above data, one can conclude that the field strength level can be used accurately to determine ATV reception at UHF.

2. ATV Margin Statistics versus SER

To evaluate ATV service availability versus ATV margin, ATV sites were grouped according to the same margin groupings used to select the sites for Phase I of this measurement program. Table 9 presents a comparison of the various margin groupings versus service availability based on the 10-minute objective (SER) and subjective observations for channel 53.

Table 9
Channel 53 Margin Level versus Service Availability

ATV MARGIN (dB)	Channel 53 Number of Sites Measured n = 50		
	Margin	SER = 0	Subjectively Satisfactory
-6 to 0	3	0	0
0.1 to 10.0	15	8	12
10.1 to 20.0	13	12	13
Greater than 20	19	17	19

The data in Table 9 show a good correlation between ATV margin groupings and ATV service availability using both the objective and subjective evaluation method. For low margin values, satisfactory reception was achieved in most cases. Failure in ATV reception was principally due to the combination of weak signal and strong dynamic multipath conditions. All-in-all, the ATV margin remains a good measure of how far the ATV signal can fall before the picture and sound are lost for UHF.

D. IN-HOME MEASUREMENTS

1. Residential Tests - Channel 53

A requirement of the test plan for in-home viewing of the ATV signal was that the households had satisfactory NTSC reception available. At three of the ten homes included in the Phase I testing, identified as H-3, H-8 and H-9, satisfactory NTSC reception was not available, even with the NTSC ghost canceler. At H-3, the NTSC signal was totally useless. At H-8, the in-home NTSC CCIR impairment rating was only 2 without ghost canceling and was only raised to 2.5 with ghost canceling. At H-9, the NTSC CCIR impairment rating was 1.5 without ghost canceling and, even with the ghost canceler in use, the impairment rating was raised to only 2.

Of the remaining homes, with NTSC CCIR impairment ratings of at least 3, the minimum considered to provide satisfactory reception, only location H-6 did not provide satisfactory ATV reception indoors. At that location, 20.7 miles from the transmitter, the NTSC impairment rating was 2.5 without ghost canceling and 3 with ghost canceling. Within the residence, multipath produced a deep notch (20-30 dB) in the 6 MHz passband (typically falling between the picture and chroma carriers in NTSC), causing an unacceptable number of errors. The notch position within the band varied with antenna orientation, but could not be completely eliminated by the ATV receiver. The limitation of signal reception (NTSC and ATV) at the indoor sites was often the severe multipath created within the home, and the use of a non-discriminating bow-tie antenna. A brief experiment at a couple of in-home sites with a dual bow-tie antenna plus a screen reflector antenna showed a vast improvement to indoor signal reception and reduced sensitivity to antenna positioning.

At locations where ATV service was satisfactory, movement within the room appeared to have little effect on the ATV performance. Locations of the residences visited ranged in distances of 1.2 miles to 25.6 miles from the transmitter. At all ten residential locations,

reception of the ATV signal on the truck-mounted outdoor antenna was satisfactory with substantial margin-to-reception failure noted.

2. Residential Tests - Channel 6

As noted previously, observations of ATV and NTSC reception on channel 6 at residences was confined to eight of the ten residences where channel 53 was tested. Among the eight locations, satisfactory reception was not available for either ATV or NTSC at three indoor locations (sites H-2, H-3 and H-5). At one outdoor location (site H-3) and at two indoor locations (sites H-4 and H-6), ATV reception was satisfactory but NTSC reception was not satisfactory. At one additional outdoor location (site H-5), NTSC reception was not satisfactory whereas ATV reception was useable, although with some noticeable errors. Both indoor and outdoor reception was satisfactory for both services at locations H-1, H-7 and H-8. Indoor reception was satisfactory for both services at locations H-2, H-4 and H-6. The limitation of signal reception (NTSC and ATV) at the indoor sites was often the severe multipath and impulse noise created within the home, and the use of non-discriminating rabbit ears antenna. On channel 6, as on channel 53, movement within the room containing the indoor antenna did not impact adversely on ATV performance.

IV. SUPPLEMENTARY TESTS

A. ASYNCHRONOUS TRANSFER MODE (ATV) TEST

The goal of this field trial was to demonstrate that a Grand Alliance Advanced Television (ATV) 19 Mbs Transport stream (containing compressed MPEG-2 video, Dolby AC3 surround sound audio and auxiliary data) can be interfaced to an Asynchronous Transfer Mode (ATM) network. This was a demonstration of feasibility only and was not intended to resolve all potential problems that could arise from such an interconnect.

To conduct this test, which was coordinated by David Sarnoff Research Center, Bell South arranged for the ATV Field Test Site to be connected to the Central Avenue Office (in Charlotte) of Southern Bell via a 7 mile single-mode optical fiber pair. An OC48 network connection carries the signal to the Caldwell Avenue office that houses the ATM Switch. An OC3 network connects to the switch itself. The first two tests described below were conducted with the ATM signal being returned to the ATV Field Test Site after passing only through the Caldwell Avenue ATM switch The third test involved a longer ATM path.

For these tests, Grand Alliance ATV Transport data stream packets were split into ATM sized pay loads and then formed into ATM cells using equipment provided by the Grand Alliance. The ATM cells, with appropriate ATM headers and syntax, were transmitted to the ATM network switch and returned to the field test site. The packets, after routing through an ATM network, are received and converted back into MPEG-2 (Motion Picture Experts Group, version 2) Transport packets.

The ATM channel was selected for constant bit rate which provides minimum packet timing errors or "jitter." Transmission and Receive ATM/MPEG-2 Network Adapters were provided by Thomson Broadband Systems. These adapters provide multimode fiber optic Input/Output (I/O). Single mode fiber optic I/O was provided by Bell South. The Bell South facility converts multimode to single mode using a stand-alone piece of hardware.

Test 1: An initial test was designed to verify the basic connection to the ATM network. A standard television broadcast D3 video tape (VTR) machine provided the 19 Mbs data source

using pseudo-random data sequences, already recorded for diagnostic use at the field test site. These pseudo-random sequences were passed through the ATM hardware so that accurate digital bit error rate measurements could be made.

The ATM to MPEG-2 interface hardware was connected to a spare Transport Stream Decoder (TSD). The Aux Data output of the TSD supplies the input to an Aux Data Decoder (ADD). This in turn supplied a serial stream to a Hewlett-Packard Bit Error Rate Tester (BERT). The BERT displayed no errors when the pseudo-random sequence was passed through the initial test configuration and ATM communications channel. This test verified the basic operation of the ATV/ATM hardware interconnected for the first time through a true ATM network.

Test 2: A pre-recorded D3 tape with MPEG-2 compressed HDTV pictures and sound, normally used as the field test signal source for subjective testing, was fed at the 19 Mbs rate into the Network Interface Transmitter. The signal was received back from the Bell South ATM network and again applied to the Network Interface Receiver. The MPEG-2 Transport Stream output from the receiver was fed to the ATV Grand Alliance 8-VSB modulator.

The 8-VSB modulator fed the over-the-air channel 53 transmitter at the ATV field test site and broadcast for reception by receivers at remote locations. A sample of the radio frequency signal was fed to the ATV field truck parked at the transmitter site. The 8-VSB receiver and MPEG-2 decoder in the field truck fed an HDTV display (and sound) and a D3 VTR where an error-free recording was made. This monitoring process indicated the ATV to ATM to RF path was working properly. The over-the-air UHF-TV channel 53 signal was also received at a cable television headend site 45 miles from the transmitter, combined with a second 8-VSB signal and transmitted as a 16-VSB signal over the cable system to the CableLabs Field Van. In the van, at a typical subscriber drop point downstream from the headend, the 16-VSB signal was received error-free, MPEG-2 decoded, displayed on a video monitor and again recorded on a D3 VTR. This was the first time an ATV signal originating as an ATM signal had been broadcast over-the-air and received error-free through a cable television system.

Test 3: A third test was designed to increase the physical length of the path and to increase the number of ATM switches. The Charlotte switch was connected to a switch in Raleigh (NC) which in turn connected to a third ATM switch in Greensboro (NC) for a total round trip distance of approximately 450 miles and passage of the ATM signal through the equivalent of six ATM switches. After conversion from ATM to 19 Mbs ATV and 8-VSB, the signal was again fed to the channel 53 UHF-TV transmitter.

In addition to it's normal test activities, the ATV field test truck received and decoded the ATV signals at a site about 40 miles from the transmitter location and displayed the signal on an HDTV large screen monitor with accompanying stereo audio. The 19 Mbs data stream was also recorded on a D3 VTR. It was during this test that the effect of ATM packet "jitter" became a problem to the specific equipment configuration employed. At times (sometimes at intervals of several minutes) the jitter would exceed the buffer capacity of the ATM receiver which resulted in unique errors (different from typical over-the-air impairments) in the displayed picture. Thus, the purpose of this test, to determine potential problems in an ATV/ATM interface, was met with the realization that additional analysis, interface improvements and further prototype testing will be needed to insure error-free performance.

V. CONCLUSION

The Phase I test results reported herein show that the more comprehensive tests made in 1994 (199 sites versus 50 sites), although based on bit-error rate measurements on the transmission subsystem rather than on a complete prototype, provided a reliable statistical analysis of the performance of the Grand Alliance ATV system at UHF. The small sample size, and interference problems associated with VHF testing, prevents a similar conclusion for VHF, but logic suggests that a similar conclusion for VHF should be warranted. Additional testing in the VHF band would be most desirable to confirm the relationship between the bit-error rate results using the transmission subsystem only and the full prototype test results.

Of particular usefulness in evaluating the service potential of the ATV system is the clear correlation between field strength and service. Service area limits based on laboratory results were confirmed.

All in all, the 1995 field testing of the GA full system prototype supports the conclusion of the 1994 transmission subsystem testing that HDTV service will be available where NTSC service is presently available, and in many instances where NTSC service is unacceptable.

VI. ACKNOWLEDGMENTS

The successful completion of the Phase I testing of the GA system prototype is attributable in no small part to the ATV Field Test Project staff headed by Edmund A. Williams and including Peyton Hines, Transmitter Supervisor, Chuck Britt and York David Anthony, Field Truck Supervisors, Jim Schettig, Field Truck Technician, and Peter Kok, Field Truck Operator. Numerous representatives from the Grand Alliance did yeoman duty solving problems, keeping equipment operating properly and assisting in the collection of data. Although many deserve recognition, special thanks must be directed to Gary Sgrignoli, Jacob George and Robert Densler, from Zenith, who endured the heat of the Charlotte summer in the field truck where more attention was directed to maintaining a comfortable environment for equipment than for personnel. PBS, in particular Mark Richer, is thanked for its overall project management, Victor Tawil of MSTV for data analysis, and the Field Testing Task Force, chaired by Jules Cohen, for its support of the project.

FIGURE 1

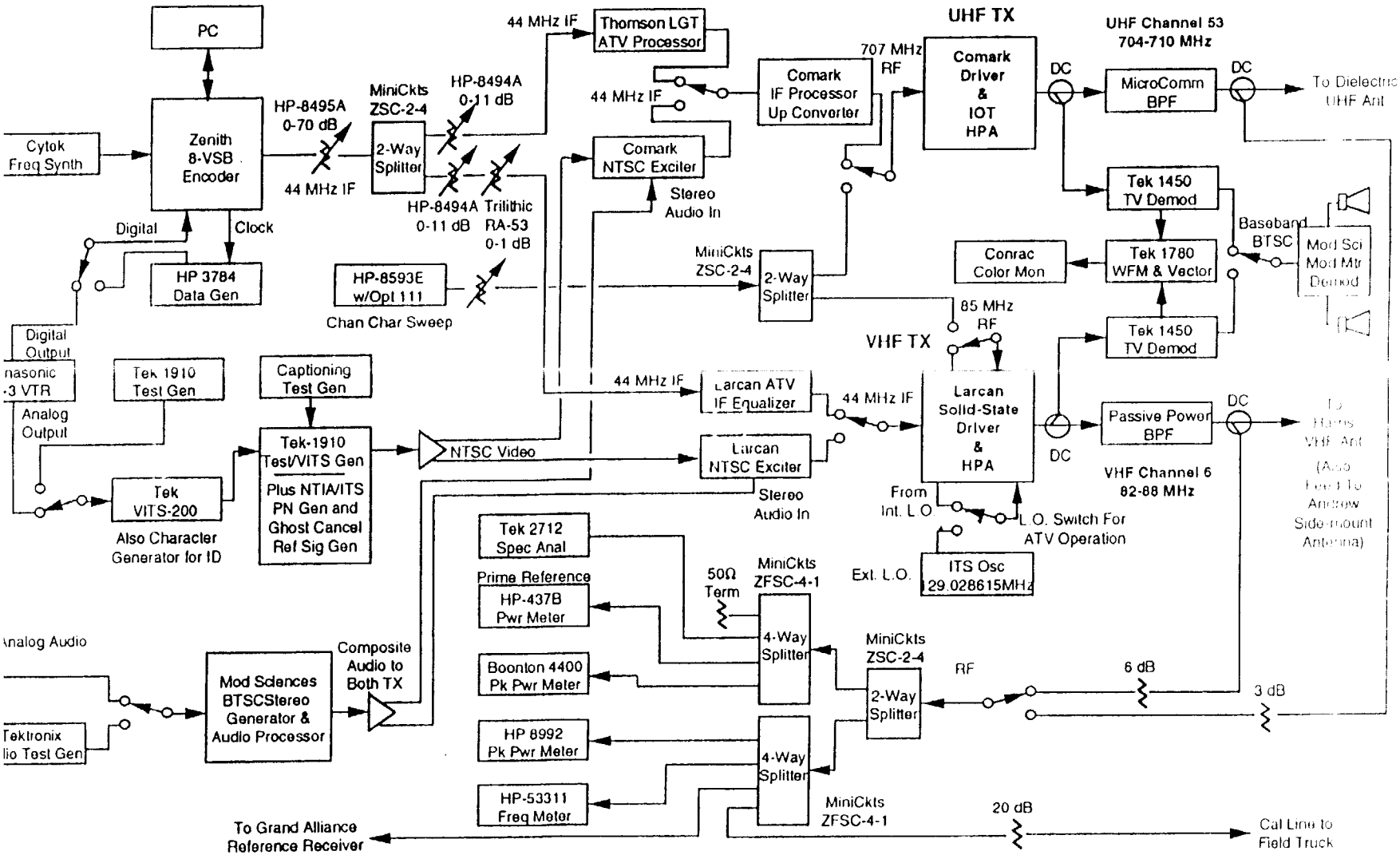

Block Diagram of Transmission Facility

ATV Field Test Project
Charlotte, North Carolina

3/20/95
Rev 9/95

FIGURE 2

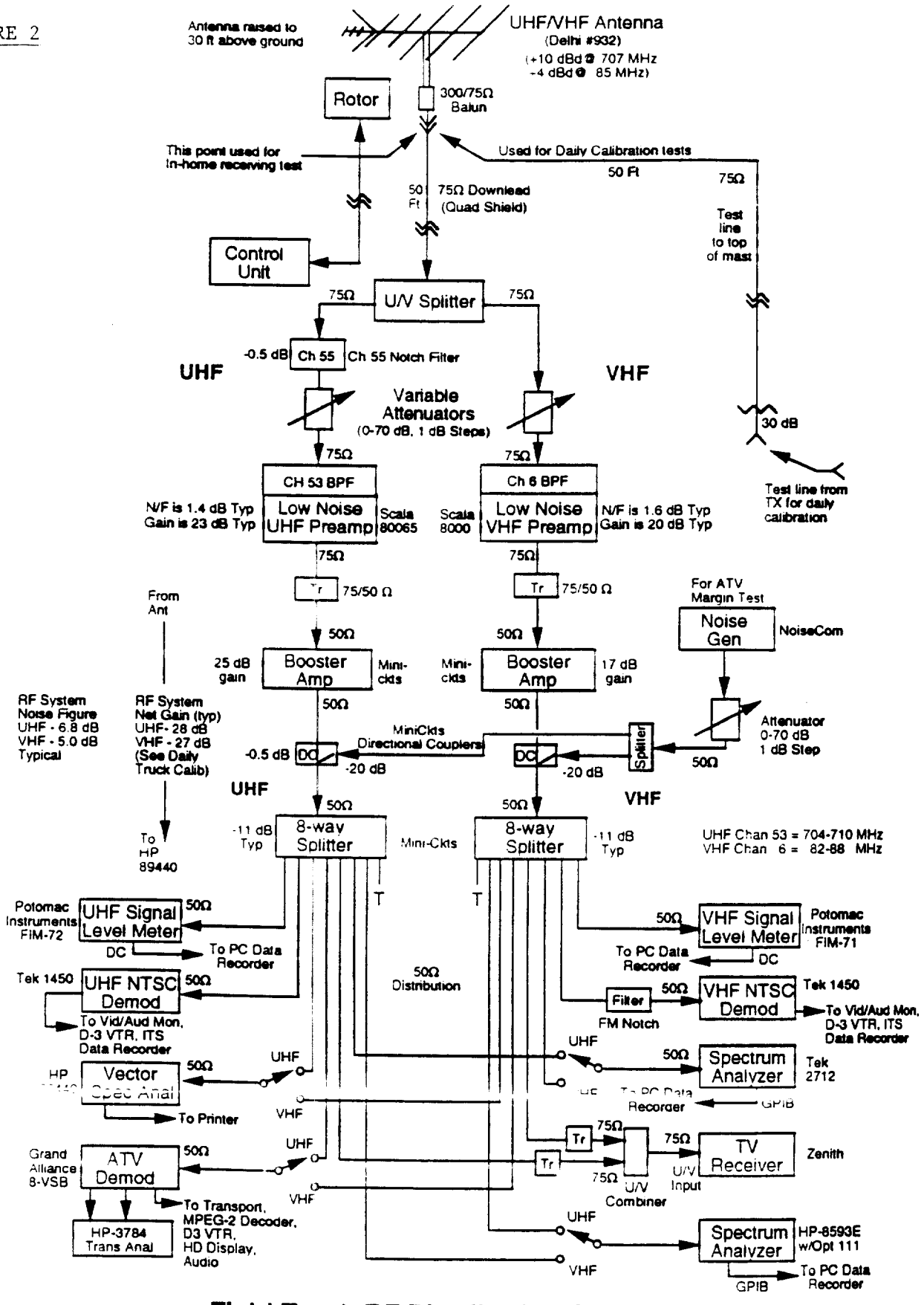

Field Truck RF Distribution System

FIGURE 3

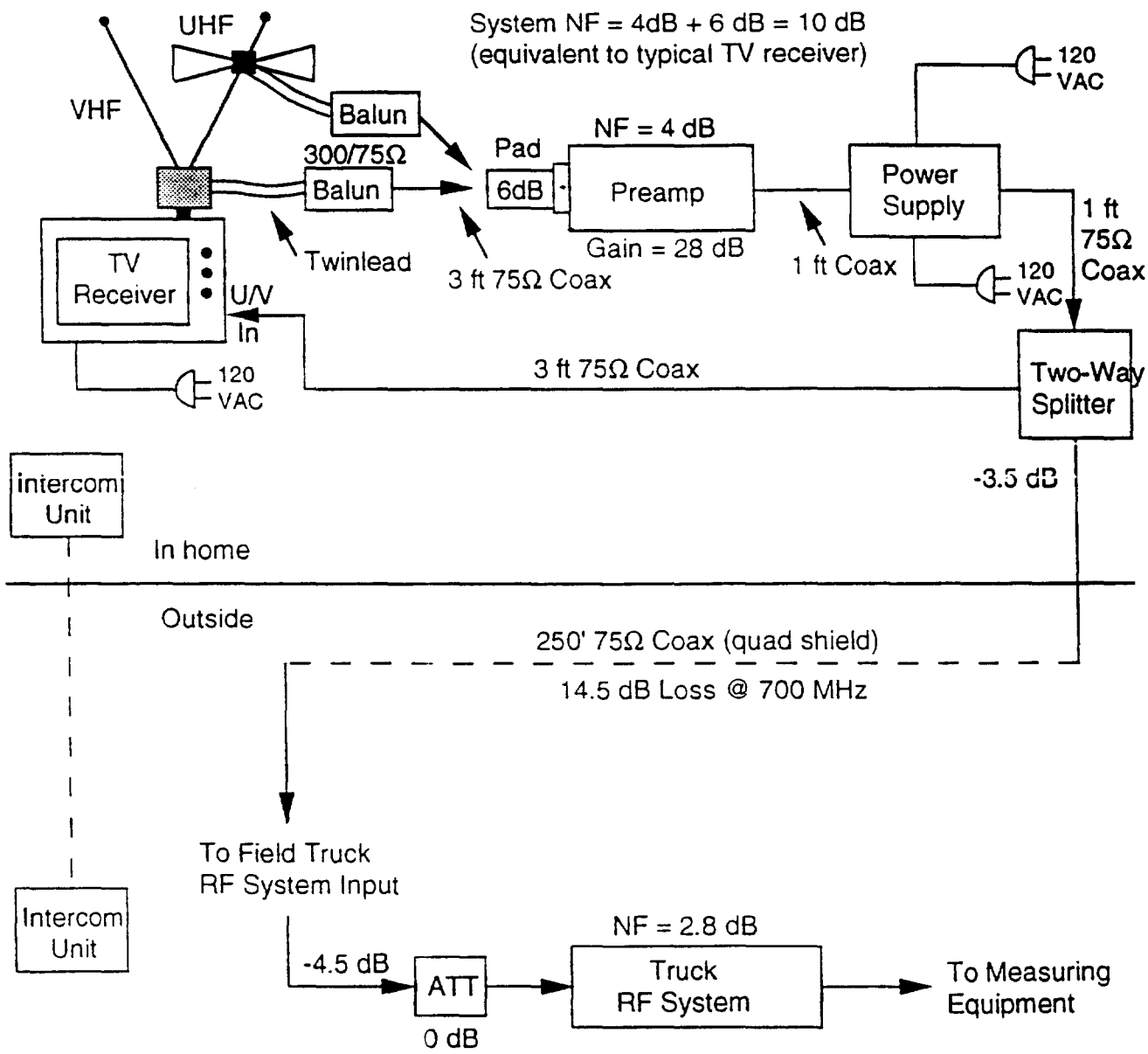

Indoor Antenna Test - Block Diagram

APPENDIX A

NTSC SIGNAL TABULATED DATA DESCRIPTION

Column No.	Description
1	Site number
2	Date measurement was taken
3	Site coordinate
4	Distance in miles from the transmitter
5	Azimuth in degree of the receiving antenna
6	Field strength in dBuV/m at a stationary location in the middle of the 100-foot run
7	CCIR impairment rating when the Ghost Canceler was off
8	CCIR impairment rating when the Ghost Canceler was on
9	Noise floor in dBm over a 6 MHz band width
10	Carrier-to-Noise (C/N) in dB as defined for an NTSC signal

TERRESTRIAL ATV TEST DATA SUMMARY
CHANNEL 6
SUMMER 1995

NTSC SIGNAL										
SITE NO	DATE	SITE_COORDINATE		DISTANCE (MI)	AZIMUTH (DEG)	FIELD STRENGTH (dBuV/m)	IMPAIRMENT GC_OFF (CCIR)	IMPAIRMENT GC_ON (CCIR)	NOISE FLOOR (dBm)	C/N (dB)
C1-8	07/26/95	35 12 35 N	80 50 03 W	8.8	330	73.3	2.5	3.5	-59.1	43.2
C2-2	08/01/95	34 57 12 N	81 01 52 W	28.4	50	68.7	3	3	-58.3	40
C2-8	08/01/95	34 56 19 N	81 01 28 W	28.9	330	38.8	1	1	-58	14.7
G1B3	07/27/95	35 13 78 N	80 50 68 W	9.0	295	77.6	2.5	3.5	-59.7	44.2
G1B4	07/25/95	35 13 53 N	80 49 49 W	8.0	120	73.7	2.5	3.5	-60	43
G1E3	07/26/95	35 11 11 N	80 50 66 W	10.0	100	75.7	4	4	-61.9	46.4
G1E4	07/26/95	35 11 02 N	80 49 52 W	9.1	110	70.1	3	3	-59	41.9
G2B3	07/27/95	34 57 71 N	81 02 04 W	28.0	350	70.9	2.5	2.5	-56.1	39.9
G2C1	07/31/95	34 56 82 N	81 03 93 W	30.0	10	57.9	2	2	-60.7	30.5
G2C3	07/31/95	34 56 56 N	81 01 51 W	28.6	240	59.2	1.5	1.5	-52.3	28.4
G2D3	07/31/95	34 55 56 N	81 01 55 W	29.5	330	61.1	2	2	-60.3	30.3
G2E1	08/01/95	34 54 50 N	81 03 56 W	31.7	320	57.6	2.5	2.5	-59.2	28.9
G2E2	08/01/95	34 55 02 N	81 02 49 W	30.8	350	60.7	2.5	2.5	-62.1	31.9
R050-5	08/03/95	35 27 20 N	80 23 42 W	21.6	120	67.8	4	3.5	-49.7	34.2
R050-11	08/03/95	35 37 19 N	80 08 33 W	39.9	240	56.2	1	1	-54.4	27.3
R085-9	08/03/95	35 17 52 N	80 04 55 W	34.2	110	61.2	2.5	2.5	-49.6	27.5
R085-10	08/03/95	35 18 14 N	80 01 56 W	37.0	309	55.2	1	1.5	-56.4	-28.1
R085-12	08/02/95	35 18 14 N	79 55 36 W	43.0	270	52	1.5	1.5	-59.6	28.8
R085-13	08/02/95	35 18 33 N	79 52 51 W	45.6	80	54.1	1	1	-56.8	28.1
R085-16	08/02/95	35 19 18 N	79 43 02 W	54.9	310	52.5	1	1	-52.9	22.6
R110-9	08/09/95	35 04 52 N	80 07 23 W	33.9	150	61.1	3	3	-57.1	35.2
R110-10	08/09/95	35 03 47 N	80 04 44 W	36.7	280	56.5	3	2.5	-61.3	34.8
R110-14A	08/09/95	35 00 18 N	79 51 23 W	50.0	135	59.6	0	0	-40.5	17.1
R110-15	08/09/95	34 59 15 N	79 49 18 W	52.2	180	50.4	0	0	-50.5	17.9
R110-16	08/09/95	35 58 36 N	79 46 34 W	54.8	350	46.6	0	0	-47	10.6

TERRESTRIAL ATV TEST DATA SUMMARY
CHANNEL 6
SUMMER 1995

NTSC SIGNAL										
ITE NO	DATE	SITE_COORDINATE		DISTANCE (MI)	AZIMUTH (DEG)	FIELD STRENGTH (dBuV/m)	IMPAIRMENT GC_OFF (CCIR)	IMPAIRMENT GC_ON (CCIR)	NOISE FLOOR (dBm)	C/N (dB)
185-14	08/04/95	34 32 47 N	80 45 41 W	49.2	230	55.4	1	1	-54.5	26.2
215-11	08/04/95	34 46 32 N	81 05 27 W	40.1	180	49.8	1	1	-64	15.1
270-10	08/10/95	35 15 22 N	81 20 50 W	36.9	340	58.7	3	3	-57	32.5
270-11	08/10/95	35 15 22 N	81 22 54 W	39.2	30	58.3	2	2	-55.7	30.8
270-12	08/10/95	35 15 14 N	81 26 84 W	42.9	270	50.6	1	1	-53.9	21.3
270-14	08/07/95	35 14 56 N	81 33 04 W	48.8	355	52.6	1	1	-59.7	21.7
270-15	08/07/95	35 15 19 N	81 36 30 W	52.0	70	51.2	*	*	-63.3	22.9
270-16	08/07/95	35 15 06 N	81 39 34 W	54.9	0	49.4	*	*	-59.3	18.1
300-9	08/11/95	35 29 79 N	81 12 54 W	33.9	30	72.7	1	1	-50.2	34.9
300-10	08/11/95	35 30 56 N	81 15 44 W	37.1	220	59.7	1	1	-47.3	24
305-14	08/08/95	35 39 29 N	81 25 13 W	49.9	320	61.7	2	2	-42.9	21.4
300-15	08/08/95	35 37 38 N	81 39 08 W	51.9	120	60.3	1	1	-47	24.1
300-16	08/08/95	35 38 27 N	81 32 35 W	55.2	190	55.8	1	1	-35	7.6
305-2	07/28/95	35 21 27 N	80 52 34 W	12.9	185	76.9	3.5	4	-60.9	46.6
305-8	07/28/95	35 30 53 N	81 08 66 W	31.3	64	61.6	2	2	-55.7	34.1

* No signal or sound.

TERRESTRIAL ATV TEST DATA SUMMARY
CHANNEL 6
SUMMER 1995

NTSC SIGNAL										
SITE NO	DATE	SITE_COORDINATE		DISTANCE (MI)	AZIMUTH (DEG)	FIELD STRENGTH (dBuV/m)	IMPAIRMENT GC_OFF (CCIR)	IMPAIRMENT GC_ON (CCIR)	NOISE FLOOR (dBm)	C/N (dB)
H-1A	08/14/95	35 16 08 N	80 41 17 W	1.2	35	106.6	4.5	5	-68.1	52 7
H-1B	08/14/95	36 16 16 N	80 41 24 W	1.2		112.7	4.5	5	-72	55.7
H-2A	08/15/95	35 27 03 N	80 38 10 W	14.0	225	81.1	4	4	-71.7	49
H-2B	08/15/95	35 27 03 N	80 38 10 W	14.0		65.1	2	2	-45.2	27.2
H-3A	08/16/95	35 32 50 N	80 52 51 W	23.1	330	68.4	2	2	-68.2	30.6
H-3B	08/16/95	35 32 50 N	80 52 51 W	23.1	***	***	***	***	***	***
H-4A	08/16/95	35 11 13 N	80 39 54 W	4.6	230	97.8	5	5	-65.6	49.4
H-4B	08/16/95	35 11 13 N	80 39 54 W	4.6	0	81.6	2.5	2.5	-59.9	43.5
H-5A	08/17/95	35 34 23 N	80 54 46 W	25.6	35	65.5	2	2	-56.8	23.1
H-5B	08/17/95	35 34 23 N	80 54 46 W	25.6	125	61.7	0	0		-23.5(?)
H-6A	08/21/95	35 23 45 N	81 00 19 W	20.7	300	77.5	4	4.5	-60.7	41.3
H-6B	08/21/95	35 23 45 N	81 00 19 W	20.7		64.4	2	2	-41.1	22.6
H-7A	08/21/95	35 10 39 N	80 50 59 W	10.6	100	83.3	4.5	4.5	-67.9	46.3
H-7B	08/21/95	35 10 39 N	80 50 59 W	10.7		72	3	3	-58.4	36.5
H-8A	08/22/95	35 05 19 N	80 47 47 W	12.8	160	79.8	4	4	-67.6	45.2
H-8B	08/22/95	35 05 19 N	80 47 47 W	12.8		74.1	3	3	-61.9	38.8

*** Signal too weak to measure

TERRESTRIAL ATV TEST DATA SUMMARY
CHANNEL 53
Summer 1995

NTSC SIGNAL										
SITE NO	DATE	SITE_COORDINATE		DISTANCE (MI)	AZIMUTH (DEG)	FIELD STRENGTH (dBuV/m)	IMPAIRMENT		NOISE FLOOR (dBm)	C/N (dB)
							GC_OFF (CCIR)	GC_ON (CCIR)		
C1-8	07/20/95	35 12 35 N	80 50 03 W	8.8	330	84.3	2	4	-71.6	50.8
C2-2	08/01/95	34 57 12 N	81 01 52 W	28.4	50	77.6	4	4	-68.8	46.8
C2-8	08/01/95	34 56 19 N	81 01 28 W	28.9	330	65.2	4	4.5	-72.2	40.8
G1B3	07/27/95	35 13 78 N	80 50 68 W	9.0	295	90.5	3	4.5	-71.9	50.6
G1B4	07/25/95	35 13 53 N	80 49 49 W	8.0	120	82	2.5	2.5	-71.9	58
G1E3	07/26/95	35 11 11 N	80 50 66 W	10.0	100	74.4	4	4.5	-71.9	48.3
G1E4	07/26/95	35 11 02 N	80 49 52 W	9.1	110	84.9	4.5	4.5	-71.7	48.6
G2B3	07/27/95	34 57 71 N	81 02 04 W	28.0	350	89.7	3.5	4.5	-71.8	49.7
G2C1	07/31/95	34 56 82 N	81 03 93 W	30.0	10	52.9	1.5	1.5	-71.8	28.7
G2C3	07/31/95	34 56 56 N	81 01 51 W	28.6	240	72.8	4.5	5	-71.8	48.5
G2D3	07/31/95	34 55 56 N	81 01 55 W	29.5	330	70.6	3.5	4.5	-72.2	46.8
G2E1	08/01/95	34 54 50 N	81 03 56 W	31.7	320	59.2	3	3	-71.9	34.5
G2E2	08/01/95	34 55 02 N	81 02 49 W	30.8	350	55.9	2.5	2.5	-71.9	31.3
R050-5	08/03/95	35 27 20 N	80 23 42 W	21.6	120	75.7	3	3.5	-70.5	50.5
R050-11	08/03/95	35 37 19 N	80 08 33 W	39.9	240	56.3	1.5	2	-71.9	32.3
R085-9	08/03/95	35 17 52 N	80 04 55 W	34.2	110	58.1	2.5	3	-72.7	34.9
R085-10	08/03/95	35 18 14 N	80 01 56 W	37.0	309	50.4	1	1	-72.3	26.9
R085-12	08/02/95	35 18 14 N	79 55 36 W	43.0	270	58.5	2.5	2.5	-68.4	31
R085-13	08/02/95	35 18 33 N	79 52 51 W	45.6	80	62.9	2	2.5	-71.2	38.2
R085-16	08/02/95	35 19 18 N	79 43 02 W	54.9	310	59.2	2	2	-72.3	35.6
R110-9	08/09/95	35 04 52 N	80 07 23 W	33.9	150	60.1	3.5	4	-82.5	36.6
R110-10	08/09/95	35 03 47 N	80 04 44 W	36.7	280	59.2	3	3.5	-72.3	35.5
R110-14A	08/09/95	35 00 18 N	79 51 23 W	50.0	135	62.3	3	3	-72.5	38.8
R110-15	08/09/95	34 59 15 N	79 49 18 W	52.2	180	54	2.5	2.5	-72.3	30.3
R110-16	08/09/95	35 58 36 N	79 46 34 W	54.8	350	53.6	2.5	2.5	-72.2	29.8

TERRESTRIAL ATV TEST DATA SUMMARY
CHANNEL 53
Summer 1995

NTSC SIGNAL										
SITE NO	DATE	SITE_COORDINATE		DISTANCE (MI)	AZIMUTH (DEG)	FIELD STRENGTH (dBuV/m)	IMPAIRMENT GC_OFF (CCIR)	IMPAIRMENT GC_ON (CCIR)	NOISE FLOOR (dBm)	C/N (dB)
R185-14	08/04/95	34 32 47 N	80 45 41 W	49.2	230	60	2.5	2.5	71.4	35.5
R215-11	08/04/95	34 46 32 N	81 05 27 W	40.1	180	55.3	2	2.5	-71.2	30.6
R270-10	08/10/95	35 15 22 N	81 20 50 W	36.9	340	63.2	3.5	4	-72.2	39.5
R270-11	08/10/95	35 15 22 N	81 22 54 W	39.2	30	63.3	3.5	4	-72.3	39.7
R270-12	08/10/95	35 15 14 N	81 26 84 W	42.9	270	44.5	1	0	-72.2	20.8
R270-14	08/07/95	35 14 56 N	81 33 04 W	48.8	355	55.6	2.5	2.5	-71.4	31.4
R270-15	08/07/95	35 15 19 N	81 36 30 W	52.0	70	55.9	2.5	2.5	-72	32.3
R270-16	08/07/95	35 15 06 N	81 39 34 W	54.9	0	59.1	3	4	-71.8	35.3
R300-9	08/11/95	35 29 79 N	81 12 54 W	33.9	30	84.2	4.5	4.5	-72.2	49.4
R300-10	08/11/95	35 30 56 N	81 15 44 W	37.1	220	66.2	3.5	4	-72.1	42.3
R305-14	08/03/95	35 39 29 N	81 25 13 W	49.9	320	65.5	4.5	5	-72.4	41.8
R300-15	08/08/95	35 37 38 N	81 39 08 W	51.9	120	67.7	4.5	5	-71.9	43.5
R300-16	08/08/95	35 38 27 N	81 32 35 W	55.2	190	67.2	4.5	4.5	-71.9	43
R305-2	07/28/95	35 21 27 N	80 52 34 W	12.9	185	87.9	3.5	4.5	-71.7	50.7
R305-8	07/28/95	35 30 53 N	81 08 66 W	31.3	64	62.2	3.5	4	-71.7	38