AT&T Submission

CC96-98 3/18/96

RECEIVED
APR 25 '96
FEDERAL COMMUNICATIONS COMMISSION
OFFICE OF THE SECRETARY

DOCKET FILE COPY ORIGINAL

No. of Copies rec'd
List ABCDE

Local Entry Will Be Costly, Risky, and Take Many Years to Accomplish Where Justifiable

- **Capital costs to build a second traditional wireline network are prohibitive**
  - RBOCs have average capital investment of almost $1,800/line serving 100% of the market
- **Capital investment costs for fiber, cable and/or wireless facilities (including switching) will vary substantially based on geographic density and marketshare served by new entrant**
  - Facilities deployment will occur in major urban areas and surrounding suburbs, with some additional niche markets
  - Loop resale requires capital investment at each LEC Central Office. There are 18,000+ local serving offices
  - Many smaller markets may not support a second local facilities overbuild, irrespective of technology

Some Key Variables Impacting a Decision to Build Facilities . . .

- Geographic density of local market (lines per sq/km)
- Cost of licenses (e.g., spectrum costs, franchise fees)
- Expected penetration levels (market share)
  - economies of scale
  - fixed v. variable cost ratios impacted
- Expected pricing
  - Retail discounts needed to attract consumers
  - Ability of incumbent to lower price (embedded v. TSLRIC costs)
- Ability of new entrant to finance
  - Cash Flow
  - Debt Burden

Local Exchange Market Capital Investment

	Access Lines(000)	Local Switches	Lines per Local Switch	TPIS ($000)	TPIS per Line
Ameritech	18,122	1,413	12,825	$26,805,939	$1,479
Bell Atlantic	19,167	1,408	13,613	$30,788,977	$1,606
BellSouth	20,141	1,658	12,148	$41,094,545	$2,040
NYNEX	16,578	1,297	12,782	$31,015,253	$1,871
Pacific Telesis	15,360	837	18,351	$25,384,467	$1,653
SBC	13,611	1,511	9,008	$26,642,985	$1,957
US West	14,287	1,737	8,225	$28,584,347	$2,001
Total RBOC	117,266	9,861	11,892	$210,316,513	$1,793

Illustrative Assumptions Regarding New Entrant

Marketshare	20%
Cost Factor	70%
Switch Size	200%
"New Entrant"	23,453	986	23,784	$29,444,312	$1,255

Local Market
Distribution of Lines by Density Zone

Lines/SqKm*	No. of Lines	%	Cum %
5000+	11,816,755	8%	8%
1000-5000	17,912,180	13%	21%
500-1000	51,045,344	36%	57%
100-500	24,883,922	18%	75%
10-100	27,509,564	19%	94%
0-10	8,111,266	6%	100%
	141,279,031		

Residential	97,534,713	69%	69%
Single Business	12,416,169	9%	78%
Public	1,502,035	1%	79%
Multi Business	29,826,114	21%	100%
	141,279,031		

** Lines based on residential line distribution across density zones. Assumes similar business distribution.*

Capital Cost Estimates

		Capital Cost		
Lines/SqKm*	**% of Market**	**PCS***	**Cable Upgrade****	**PCS* Base Stations on Cable**
5000+	**8%**	$1,040 (a) $1,130 (a') $1,200 (a")	$745 (a) $845 (a') $1,130 (a")	
1000-5000	**13%**	$1,475 (b)	$875-$900 (c) $1,130 (b)	$575 (c)
500-1000	**36%**			
100-500	**18%**			
10-100	**19%**			
0-10	**6%**			

** All PCS costs assume $100/subscriber spectrum acquisition costs*

***Excludes fiber to the node costs*

(a) Hatfield Associates, 1994. Assumes 20% market penetration; (a') 10%; (a") 5%

(b) Hatfield Associates, 1994. Assumes 5% market penetration

(c) Morgan Stanley, 1994. Assumes 15% penetration

No significant changes in capital costs since 1994

Resale of LEC Retail Services is Critical, but . . .

- **Resale permits carriers (especially small and medium sized carriers) to enter the local market on short notice**
- ***<u>However</u>*, reliance solely on the resale of LEC retail offerings will not maximize the benefits of competition for consumers, especially where facilities overbuild is not feasible**
  - LECs can strategically withhold/delay/withdraw service offerings
    - LEC may strategically withhold or withdraw retail services that promote competitive entry (e.g., US West proposal to withdraw Centrex)
    - LEC refusal to tariff access services until it had developed its own retail offerings (e.g., Switched 56, Clear Channel 64, PRI ISDN)
    - LEC may only offer a bundled subset of available service features in order to preclude competitor from offering other combinations
  - New entrant tied to LEC pricing decisions and avoided cost studies
    - LEC may strategically overprice/underprice retail service
    - LEC has incentive to underestimate avoided costs to "squeeze" competitor on retailing costs

Local Network Platform

New entrants should have the ability to utilize the local wireline network to design and deploy retail services on the same basis as the incumbent LEC

- At cost (TSLRIC)
- Without restrictions on ability to combine network elements and associated support systems

New Problems for Cable Telephony

- Telephony appears to interfere with, and degrade, the video signal in nearby frequency bands. This may require significant additional investment to correct.

- Competing alternative demands for the upstream spectrum needed for the system operator to provide telephony (e.g., high-speed internet access; on-line services) are creating capacity problems that may delay or prohibit cable telephony service

Necessary FCC Actions

- **Proactively preempt State rules and regulations barring or hindering competition**
  - Facilities build-out requirements (e.g., Texas)
  - LEC "revenue neutral" requirements
  - Lengthy, costly or otherwise burdensome certification processes
  - Discriminatory or exclusive USF distribution
- **Identify minimum technically feasible unbundling requirements**
  - AT&T's 11 Basic Network Elements (BNFs)
  - Permit unrestricted ability to combine BNFs to create service offerings
  - Fully implement Advanced Intelligent Network to permit full service development capability
  - Require nondiscriminatory access to systems for service ordering, billing, maintenance, repair, etc.

Necessary FCC Actions (cont.)

- **Reform all carrier-to-carrier pricing rules to eliminate cross-subsidies and other anticompetitive pricing**
  - Price Network Elements at TSLRIC
  - Establish specific guidelines for network element rate structure, e.g., fixed v. usage elements for switching
  - Price Interconnection and Reciprocal Compensation at TSLRIC
- **Establish wholesale rate setting guidelines that incorporate all avoided costs (including marketing, advertising, sales, billing, etc.)**
- **Establish competitively neutral Universal Service support mechanisms**
- **Order "True" Local Number Portability based on database solution**
- **Ensure meaningful separate subsidiary requirements for RBOC interLATA services, including imputation of access at highest tariffed rate**

Unbundling Requirements of the Act

- The *incumbent* local exchange carrier has the responsibility to provide nondiscriminatory access to network elements on an unbundled basis at any technically feasible point on rates, terms and conditions that are cost-based and nondiscriminatory (including a reasonable profit for the incumbent) and <u>in a manner that allows the requesting carrier to combine such elements to provide telecommunications service.</u> (Sec. 251(c)(3)).

- Network element means a facility or equipment used in the provision of a telecommunications service. Such a term includes features, functions, and capabilities that are provided by means of such facility or equipment, including subscriber numbers, databases, signaling systems, and information sufficient for billing and collection or used in the transmission, routing, or other provision of a telecommunications service. (Sec. 3(2)(45)).

Interconnection Requirements of the Act

The incumbent LEC has the responsibility to provide for the facilities and equipment of <u>any requesting telecommunications carrier</u>, interconnection with the LEC's network --

(A) for the transmission and routing of telephone exchange and exchange access; (Sec. 251(c)(2)(A)).

(B) at any technically feasible point within the carrier's network; (Sec. 251(c)(2)(B)).

(C) that is at least equal in quality to that provided by the local exchange carrier to itself or any subsidiary, affiliate or any other party to which the carrier provides interconnection; and (Sec. 251(c)(2)(C)).

(D) on rates, terms, and conditions that are just, reasonable and nondiscriminatory, in accordance with the terms and conditions of the agreement and the requirements of this section and section 252 (Sec. 251(c)(2)(D)).

Pricing Standards in the Act

Interconnection and Network Element Charges

Just and reasonable rates for section 251(c)(2) and (3) shall be

- based on cost (determined without reference to rate-of-return or other rate-based proceeding)
- nondiscriminatory
- include a reasonable profit

Interconnection -- The duty to provide, for the facilities and equipment of any requesting telecommunications carrier, interconnection with the local exchange carrier's network --

(A) for the transmission and routing of telephone exchange service and exchange access ...

Exchange Access -- ... the offering of access to telephone exchange services or facilities for the purpose of the origination or termination of telephone toll calls

Price Squeeze

Assumes firms are equally efficient; LEC required to impute tariffed access rate

	LEC	Competitor
ARPMin	$0.180	$0.180
Access Cost	$0.020	$0.060
Access Mark-up	$0.040	
Non-Access Cost	$0.120	$0.120
Margin	$0.040	$0.000
% Margin	22.2%	0.0%

LEC passes imputation test but prohibits competition through price squeeze

RBOC Price Squeeze in IntraLATA Market

"NYNEX is favorably positioned against competitors for intraLATA toll service competition because it has strategically priced its toll rates to permit competitors only a 20% gross margin net of access."

Analysts' Meeting Highlights, Morgan Stanley, Nov. '95

Interexchange Access and Local Interconnection Are Indistinguishable

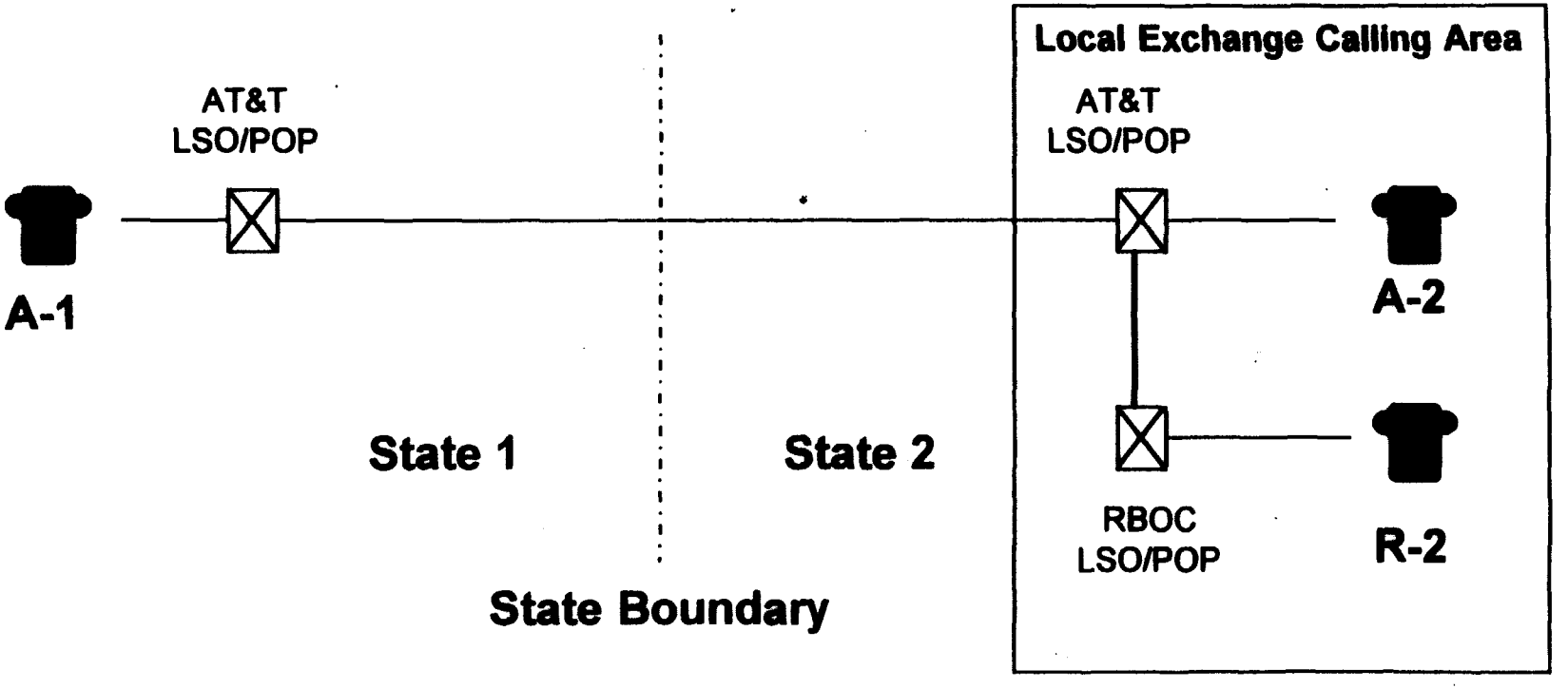

A toll call from AT&T customer A-1 to RBOC customer R-2 uses the same interconnection facilities -- and looks the same to the RBOC -- as a local call from AT&T customer A-2

AT&T's Nine Conditions and Section 271 Checklist

AT&T's Nine Conditions	Section 271 (14 Point Checklist)
- Interconnection and Reciprocal Compensation	- Interconnection - Reciprocal Compensation
- Unbundled Network - Carrier-to-Carrier Rates Set at Cost - Nondiscriminatory Rates - Uniform Technical Standards	- Unbundled Network at Cost-Based Rates - Unbundled Local Loop - Unbundled Transport - Unbundled Switching - Access to 911/E911, DA, Operator - White Page Listing - Nondiscriminatory Access to Databases and Signaling for Call Routing and Completion
- Access to Conduits and Rights of Way	- Access to Conduits and Rights of Way
- Dialing Parity, Neutral Number Administration and Local Number Portability	- Nondiscriminatory Access to Numbers - Local Number Portability - Dialing Parity
- Unrestricted Resale at Wholesale Rates	- Resale of LEC Retail Services at Wholesale Rates
- No Franchise Restrictions	- (Section 253)

Local Number Portability

Location Routing Number (LRN) has become the industry standard for providing permanent local number portability for customers of all carriers in a competitively neutral manner. Basic to the LRN call model is a 10-digit location routing number that identifies each end office switch in the network. A call to a ported number, i.e., a customer who has changed local service providers and retained the same telephone number, is accomplished by first identifying the LRN associated with the called number's end office and then routing the call, using the LRN and existing routing algorithms, to that end office where the call is completed. LRN is similar in architecture to 800 portability in that it is comprised of an industry Service Management System (SMS) and routing databases within carriers' networks. The SMS contains LRNs for all ported telephone numbers This routing information is downloaded to the routing databases. During call processing, switches will launch queries to the routing databases and obtain the LRNs. LRN is different from 800 portability is that there will be separate regionally deployed SMSs and associated administration centers. In addition, LRN routing database queries will be launched from the next-to-last or N-1 carrier allowing a geographic phase-in of number portability as local competition develops. In 800 portability, because the numbers are non-geographic, routing database queries are launched from the originating carrier.

As part of the number portability initiatives by certain state commissions, industry workshops were established to select the best call model. IL was the first and developed a comprehensive set of criteria, including mandatory items, against which each potential solution was rated. In MD, CA, and GA, industry workshops used the same criteria, modified slightly for their states, to rate the call models. In all four states the industry rated LRN the best. (In CA, PacBell insists on using its release-to-pivot model for its own network within an overall LRN framework. The industry group has asked the CA PUC to choose the architecture.) In IL, only LRN met all the mandatory criteria. Subsequently, based on the work in these four states, NY, CO, and FL have selected LRN. The industry has developed generic equipment vendor requirements for LRN, and all the switch manufacturers, Lucent, Nortel, Siemans, Ericcson, and AGCS, have committed to a general availability date of 2Q97. In addition, in IL, the industry group has issued an RFP for the SMS and expects to select a neutral third party administrator in April, 1996.

In IL, the industry group participants have signed a stipulation and agreement targeting 3Q97 for the implementation of LRN in the Chicago LATA. In GA, the commission, based on the industry group's recommendation, has ordered that LRN be implemented in the Atlanta area in 3Q97. The NY PSC has also issued an order endorsing LRN as the call model for the state. No other call model has been endorsed by any state commission, there are no requirements documented for any other call model, and there is no committed date on the part of equipment vendors for any other solution.

Because LRN is so far out in front, there is no other solution that can be implemented in 1997. In addition, a single national solution is less complex and costly because it avoids the design, development, and testing of interoperable call models. LRN can be phased in as competition develops. Finally, LRN is designed to meet future needs of location and service portabilities and wireless providers.

AT&T Public Policy
J. E. Davidson
908-221-8940

BASIC NETWORK FUNCTIONS (BNFs)

1. LOOP DISTRIBUTION - individual drop to the customer's premise originating from the Subscriber Line Carrier pedestal or similar architecture, and terminating at the first point of termination on the customer's premise.

2. LOOP CONCENTRATION/MULTIPLEXER - Subscriber Line Carrier (SLC) or similar equipment configuration at which individual subscriber traffic is multiplexed/de-multiplexed and connected to loop distribution for termination at the customer's premise.

3. LOOP FEEDER - medium on which multiplexed subscriber traffic is carried from the line side of the central office switch to the Loop Concentration facility.

4. SWITCHING - facility which provides the functionality required to connect appropriate lines or trunks to and from a desired communications path. This functionality include such things as testing, translation, routing, signaling, recording, etc.

5. OPERATOR SYSTEMS - those systems that provide for the processing and recording of special toll calls, public telephone toll calls and other types of calls requiring operator assistance as well as Directory Assistance.

6. DEDICATED TRANSPORT -is a full period, bandwidth specific interoffice transmission path between LEC end offices or between LEC end offices and a Point of Presence (POP). It provides the ability to send individual and/or multiplexed switched and special services traffic between central offices.

7. COMMON TRANSPORT - a communications channel (trunk) between two switching systems on which traffic is commingled to include multiple IXCs as well as LEC traffic. These trunks originate at an End Office and terminate at a Tandem Switch.

8. TANDEM SWITCHING - a facility that provides the function of connecting trunks to trunks for the purpose of completing inter-switch calls.

9. SIGNALING LINKS - transmission facilities in a signaling network which carry all out-of-band signaling traffic between the End Office and Signal Transfer Point, the Tandem Switch and Signal Transfer Point, the Signal Transfer Point and Signal Control Point, and Signal Transfer Point to Signal Transfer Point.

10. SIGNAL TRANSFER POINT (STP) - facility which provides the function of connection Signal Links in order to transfer appropriate signals from and between the various elements of a signaling network (SSP, Links and SCP).

11. SERVICE CONTROL POINT (SCP) - a node in the signaling network to which information request for service handling, i.e., routing, are directed and processed. The SCP contains service logic and customer specific information required to process individual requests.

NETWORK ELEMENTS

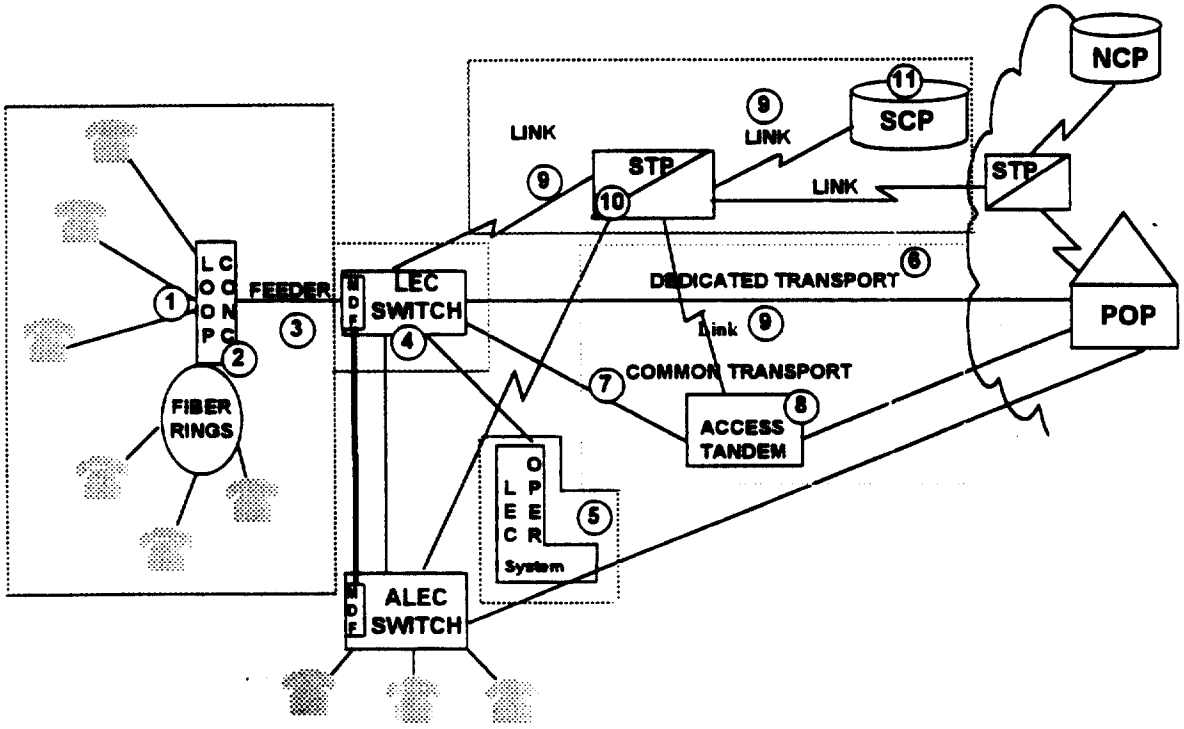

NETWORK ELEMENT
LOOP DISTRIBUTION

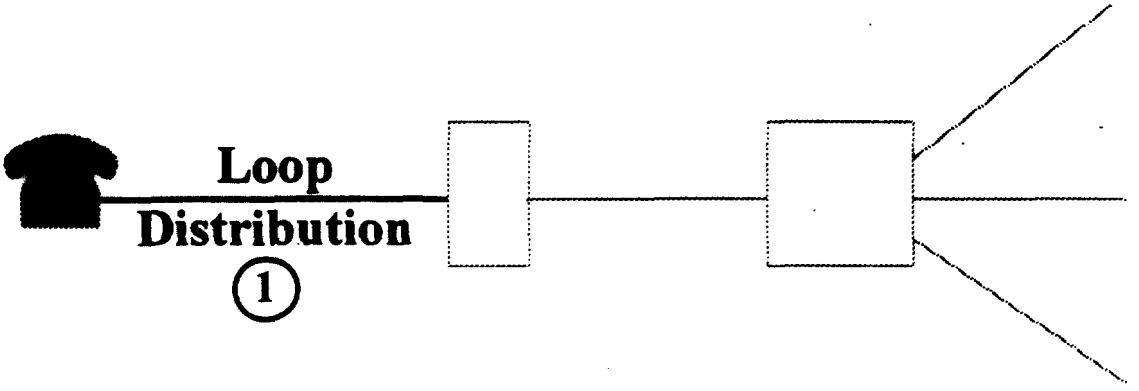

The "Loop" is the physical pair of wires from the Subscriber Line Pedestal to the customer premises.

Uses: Individual wires or spectrum used to connect the customer's premises to the first point of multiplexing or concentration, e.g., the digital loop carrier pedestal, feeder distribution interface, or fiber node. The medium of the distribution plant is typically copper, coax (used by cable companies for broadcast distribution), or fiber optic cable.

NETWORK ELEMENT
LOOP CONCENTRATOR

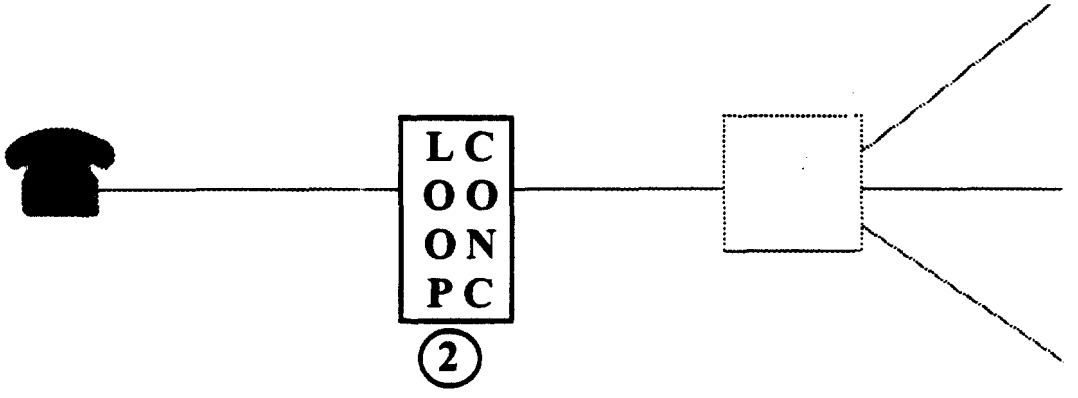

The "Loop Concentrator" is the point at which analog voice grade or digital loops are converged into high speed digital asychrorous transport, it is also the place where blocking occurs during busy hour.

Uses: The equipment used at this point in the loop plant may contain a remote terminal or combination of a remote terminal and a central office terminal. Also, loops may be concentrated/deconcentrated or multiplexed/demultiplexed at this point. This network component is used to reconfigure traffic from individual loops onto feeder plant or into remote switching devices.

NETWORK ELEMENT
LOOP FEEDER

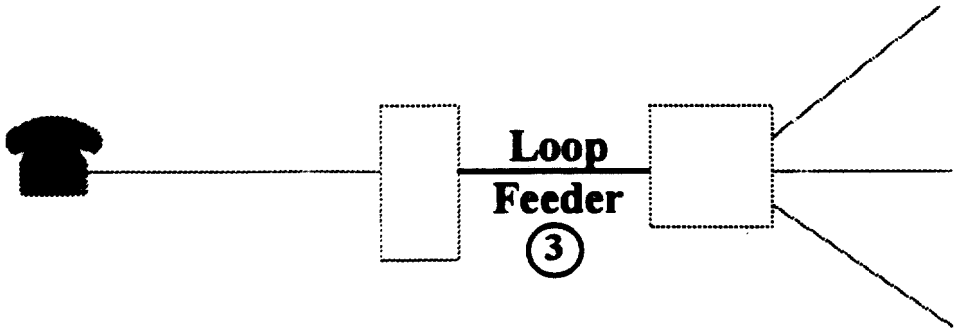

The "Loop Feeder" is the medium by which the concentrated subscriber loops are connected to the switch

Uses: The loop plant which is used to efficiently (from an engineering perspective) and cost effectively (economies of scale) transport loop traffic from the loop concentrator or remote terminal to the end offic switch. In the case where the remote terminal is located in a remote site, e.g., the closet in a multiple dwelling unit or office building, the traffic is carried from the remote site directly to the end office switch.

NETWORK ELEMENT
END OFFICE SWITCH

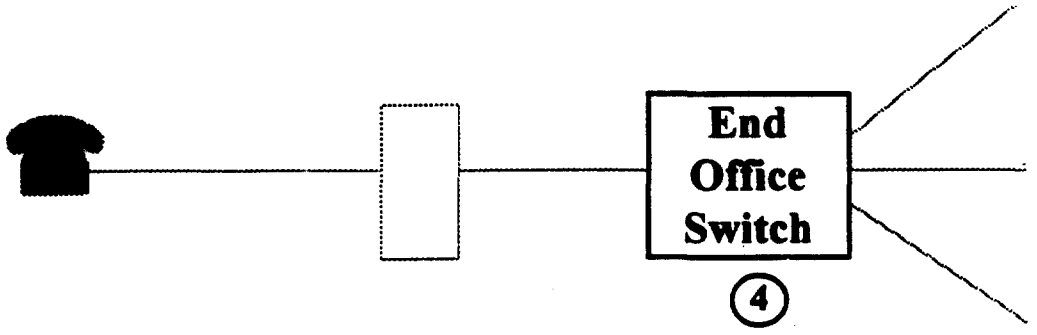

The "End Office Switch" is the medium in which lines and/or trunks are interconnected to form a desired communication path

Uses: The end office switch provides the functionality to connect the appropriate originating lines or trunks terminating of the Main Distribution Frame or Digital Cross Connect panel to a desired terminating line or trunk. This functionality includes:dial tone, signaling, basic switching, calling features and capabilities, Centrex, Pre-subscription, CIC code portability capabilities (800 & 500), testing and other operational features. It also provides access to transport (inter office and long distance), 611, Public Safety Systems (911) or 911 tandem switches, operator services, directory services and Advanced Intelligent Network functionality.

see next page