Telecommunications Industries Analysis Project

Carol Weinhaus, Project Director

Tel: (617) 367-6909
Fax: (617) 367-7127

May 14, 1996

DOCKET FILE COPY ORIGINAL

RECEIVED
MAY 15 1996
FCC MAIL ROOM

Office of the Secretary
Federal Communications Commission
1919 M Street, NW, Room 222
Washington, DC 20554

Dear Sir,

I am filing the attached research paper in my role as faculty member and academic researcher at the Public Utility Research Center, College of Business Administration, University of Florida. This is an informational document for *In the Matter of Implementation of the Local Competition Provisions in the Telecommunications Act of 1996*, CC Docket No. 96-98, *Notice of Proposed Rulemaking*.

The enclosed paper is an executive summary of *A Snapshot in Time: LEC Switch Investment and Price Structures for Connections to the Switch Just before the Telecommunications Act of 1996*, with the complete paper attached as an appendix providing factual material.

The views expressed in this paper are those of the Telecommunications Industries Analysis Project. The information in this paper is intended to provide general public information and does not constitute or foretell the official position of any of the parties who contributed to this paper. The opinions expressed in this paper do not necessarily reflect the views of any agency or company.

In accord with FCC guidelines, I am submitting an original and sixteen copies of the document (including copies for the Commissioners' personal use). I have also sent a copy to Janice Myles and a copy to the Commission's copy contractor.

Sincerely,

Carol Weinhaus

Public Utility Research Center
College of Business Administration, University of Florida
Project Address:
Meeting House Offices
121 Mount Vernon Street, Boston, MA 02108

No. of Copies rec'd 0+4
List ABCDE

DOCKET FILE COPY ORIGINAL

RECEIVED
MAY 15 1996
FCC MAIL ROOM

Comment on

In the Matter of Implementation of the Local Competition

Provisions in the Telecommunications Act of 1996,

FCC Docket No. 96-98,

Notice of Proposed Rulemaking

May 14, 1996

Carol Weinhaus *et al.*

Telecommunications Industries Analysis Project
University of Florida College of Business Administration
121 Mt. Vernon St.
Boston, MA 02108
Tel: (617) 367-6909

Table of Contents

Executive Summary of *A Snapshot in Time: LEC Switch Investment and PriceStructures for Connections to the Switch Just before the Telecommunications Act of 1996*

Appendix 1: Full Text and Diagrams of *A Snapshot in Time: LEC Switch Investment and Price Structures for Connections to the Switch Just before the Telecommunications Act of 1996*

Appendix 2: Project Information

A Snapshot in Time: LEC Switch Investment and Price Structures for Connections to the Switch Just before the Telecommunications Act of 1996

Executive Summary

May 10, 1996, Reformatted for FCC Filing

Presentation at the July 1996 NARUC Meeting, Los Angeles, CA

Telecommunications Industries Analysis Project

Carol Weinhaus
Director
Telecommunications Industries Analysis Project
Public Utility Research Center
College of Business Administration
University of Florida

Project Address:
Meeting House Offices
121 Mount Vernon St.
Boston, MA 02108
(617) 367-6909

Bob Lock
Illinois Commerce Commission

John Bosley and Dennis Wax
NYNEX

Pat Constable, Mike Shelton, and Glen Sims
SBC Communications

Dan Harris
Bell Atlantic

Terry Monroe
New York Public Service Commission

Jeff Dupree
NECA

Bill Brown
BellSouth Cellular

Mark Jamison
Sprint

Peter Copeland
U S WEST

Charlene Lagerwerff
Federal Communications Commission

Rich Go
360° Communications

Charlie Rizzo
Bellcore

Paul Vasington
Massachusetts Department of Public Utilities

David Charlton
Corning Inc.

Hitoshi Imafuku
NTT America

Takashi Nakayama
InfoCom

Sanford Berg
University of Florida

Sally Simmons
Florida Public Service Commission

Ray Marner
Kalona Cooperative Telephone

Pete Martin
BellSouth

Douglas Rice
University of Florida

A Snapshot in Time: LEC Switch Investment and Price Structures Just before the Telecommunications Act of 1996
Executive Summary

Snapshot in Time

The *Telecommunications Act of 1996* requires sweeping changes in interconnection price structures. This paper describes how interconnection issues have been addressed in the U.S., including the current status of interconnection with traditional local telephone company (called local exchange carriers, or LECs) networks. The objective of this paper is to provide a snapshot in time of investments and interconnection pricing structures associated with LEC local switches.

Changes in Market Philosophy and Interconnection Rules

Service definitions and methods for setting prices for connections to the LEC switch have depended on the prevailing market philosophy — monopoly, competition, and regulation — at the time that the service first appeared. With the current move toward competitive markets, it should be recognized that many pricing structures in place today were developed when different philosophies prevailed.

Basic Network Configurations for Connections between Companies

Focus is on the LEC switch because sooner or later traffic has to pass through this switch because it connects to the PSN and currently this is the only way for everyone to reach everyone else. The major network elements covered are loop transmission, transport, and switching. **Figure 1** indicates the types of companies or

Copyright © 1996 Carol Weinhaus and the Telecommunications Industries Analysis Project Work Group, Boston, Massachusetts.

customers connecting to either the line side or the trunk side of the LEC local switch. **Figure 2** shows the five basic network configurations for connection to the LEC switch.

Variations in Pricing Structures

There are variations in pricing structures for companies and customers with technically similar or equivalent connections.

Modeling Percent of Switch Investment

The model for small and large switches is based on assumptions, as well as averages and samples applied to engineering standards for a current digital switch. Investment reflects purchase price, which is different from "common costs" and "incremental costs," as defined by economists. For simplicity, the investments modeled exclude overheads for engineering, installation startup, and taxes. The model illustrates basic patterns with percentages of total switch investment.

Changes in How Customers Use Networks and Modeling Switch Duration/Capacity

The PSN has been traditionally engineered for voice calls. The explosion of data transmission services (faxes, e-mail messages, telecommuting from home, Internet use, point of sale transactions, and online services) requires dramatic changes in the underlying assumptions on how networks need to be designed and engineered. The model assumes an average of five minutes per call, but actual connections vary

Copyright © 1996 Carol Weinhaus and the Telecommunications Industries Analysis Project Work Group, Boston, Massachusetts.

in duration and capacity: credit card verifications take only seconds, average voice calls take less than five minutes, and average Internet connections take approximately one hour.

Modeling Results

Figure 3 shows the percent of total incumbent LEC (ILEC) switch investment modeled by type of connection:

- *The major difference between the investment for types of interconnection to the ILEC switch depends on whether the connection is on the line side or on the trunk side.*

  The percent of investment common to all line side connections is 30% for the small switch and 40% for the large switch. The percent of investment common to all trunk side connections is 35% for the small switch and 23% for the large switch.

- *A significant portion of LEC switch investment is common to all types of connections.*

  The percent of investment common to all connections is 25% for the small switch and 12% for the large switch.

- *When taken in total, the sum of the service-specific investments is significant.*

  The total of service-specific investment is 10% for the small switch and 25% for the large switch.

Copyright © 1996 Carol Weinhaus and the Telecommunications Industries Analysis Project Work Group, Boston, Massachusetts.

- *Currently, the percent of investment for specific services is relatively small, with the exception of Centrex services.*

  The range of percent of investment is generally 5% or less for specific services, except for Centrex services which are 10% for the large switch (assumed to have large business customers.

Policy Points to Consider

- Today's digital technologies are removing the technical differences between some types of connections, but not all.
- Today's political environment has removed many of the differences between various companies.
- The variation in price structures for different companies connecting to a given side of the LEC switch (line side or trunk side) is far greater than the variation in the investment for connections to that side.
- Even through customer usage patterns and technology have changed, the old price structures have remained. The 1996 legislation requires sweeping changes in these old structures.

Copyright © 1996 Carol Weinhaus and the Telecommunications Industries Analysis Project Work Group, Boston, Massachusetts.

Figure 1: Interconnection to ILEC Switch by Type of Company or Customer

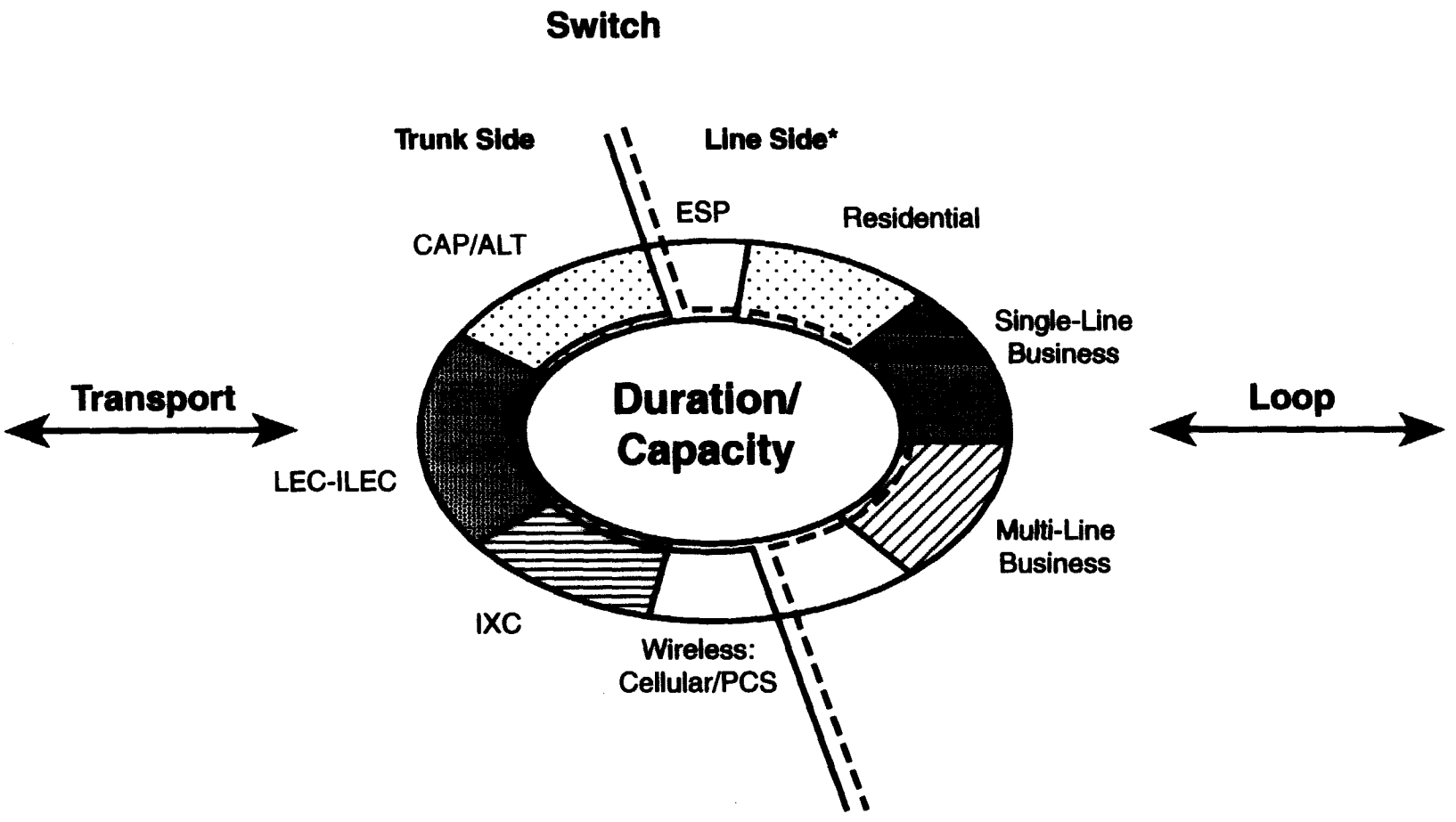

*In some cases, IXCs, new entrants, and others may also use line side connections.

Copyright 1996 Carol Weinhaus and the Telecommunications Industries Analysis Project Work Group, Boston, Massachusetts.

Figure 2: Network Configurations for Connection to the LEC Switch

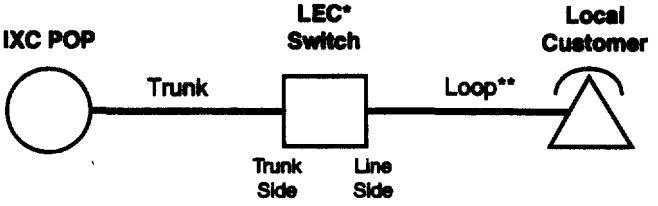

2A. Long Distance Company Access

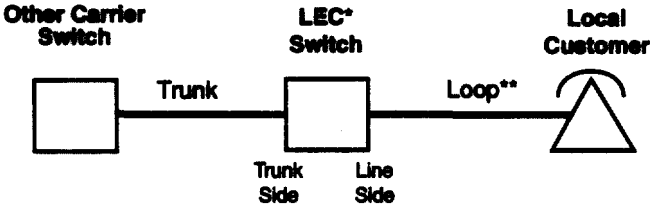

2B. Trunk Side Port

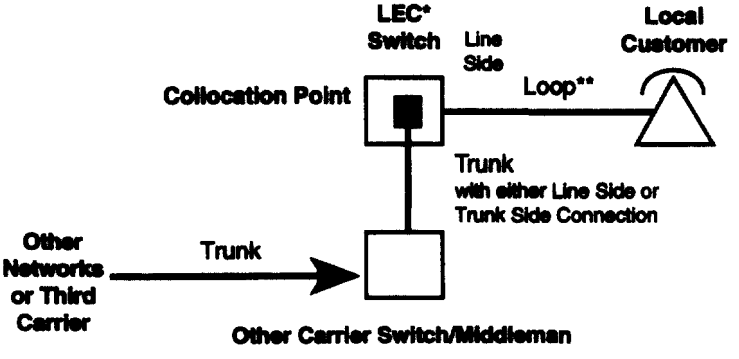

2C. Collocation: Trunk Side Port or Line Side Port

*Either an ILEC or a new market entrant.
**Also referred to as access line.

Copyright © 1996 Carol Weinhaus and the Telecommunications Industries Analysis Project Work Group, Boston, Massachusetts.

Figure 2: Network Configurations for Connection to the LEC Switch, cont.

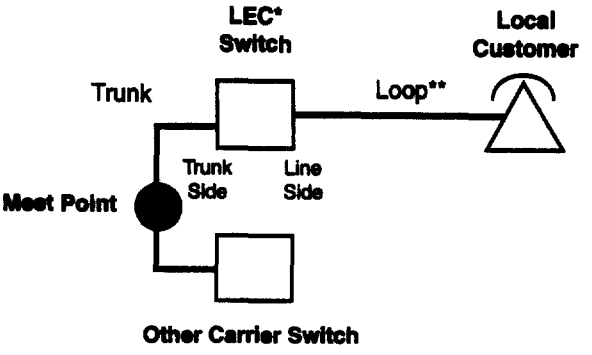

2D. Meet Point on Trunk

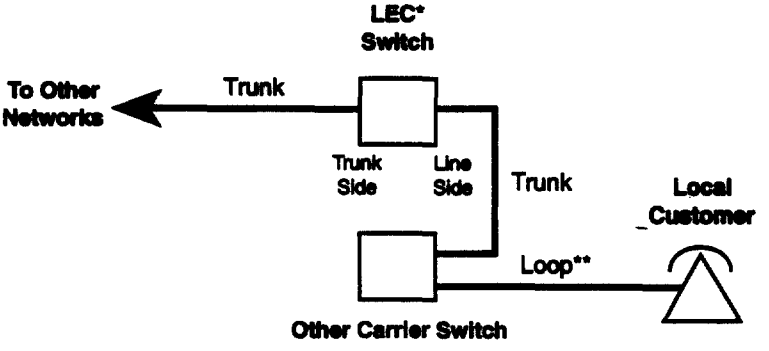

2E. Line Side Port

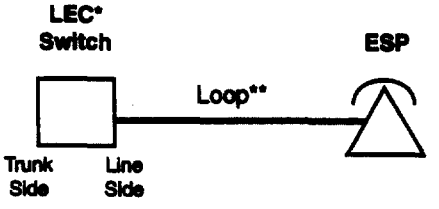

2F. ESP by Line Side Port

*Either an ILEC or a new market entrant.
**Also referred to as access line.

Copyright © 1996 Carol Weinhaus and the Telecommunications Industries Analysis Project Work Group, Boston, Massachusetts.

Figure 3: Percent of Total ILEC Switch Investment by Type of Connection

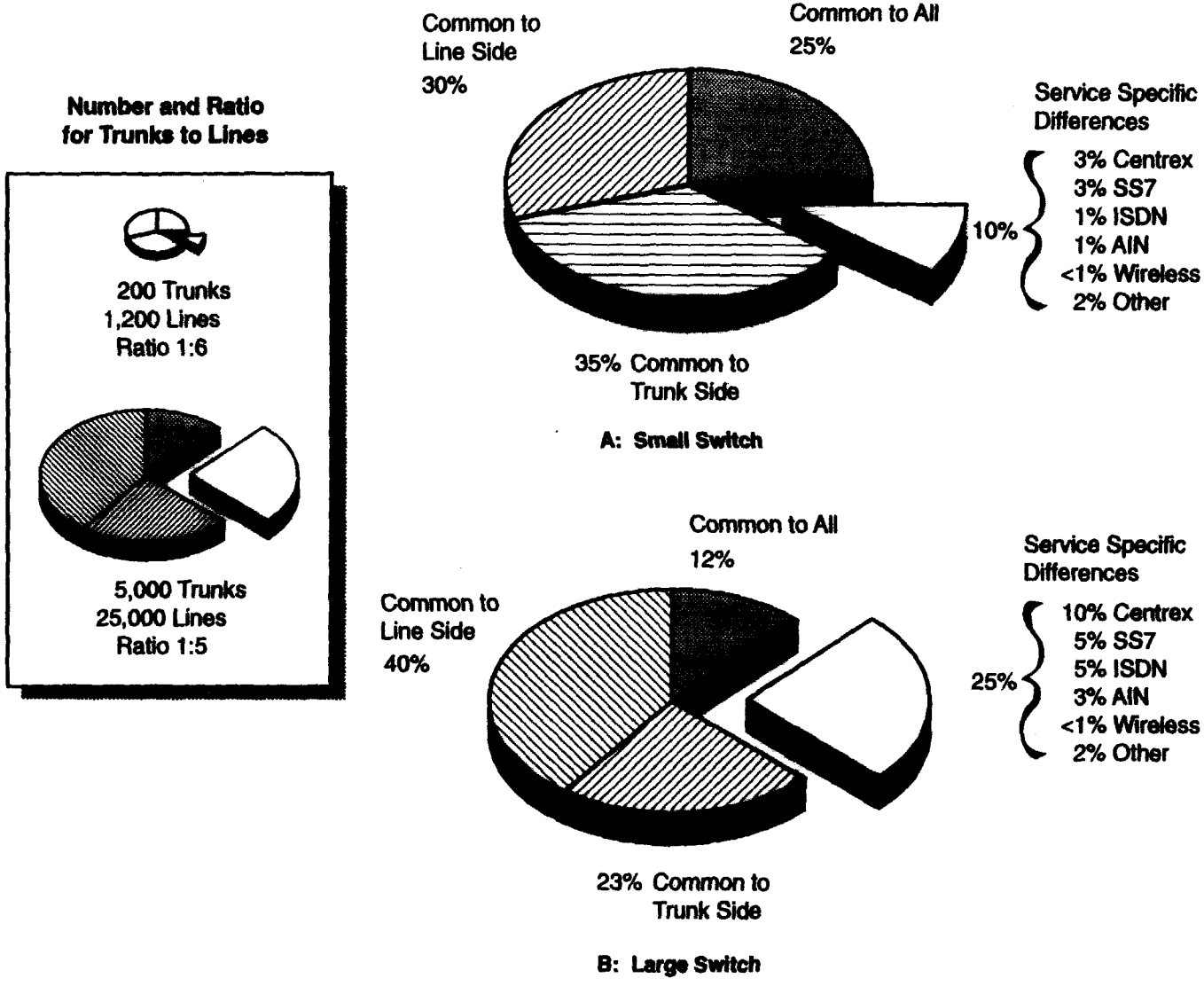

Note: Percentages are based on modeling assumptions.

Copyright © 1996 Carol Weinhaus and the Telecommunications Industries Analysis Project Work Group, Boston, Massachusetts.

Appendix 1: Full Text and Diagrams of

A Snapshot in Time: LEC Switch Investment and Price Structures for Connections to the Switch Just before the Telecommunications Act of 1996

A Snapshot in Time: LEC Switch Investment and Price Structures for Connections to the Switch Just before the Telecommunications Act of 1996

May 10, 1996, Reformatted for FCC Filing

Presentation at the July 1996 NARUC Meeting, Los Angeles, CA

Telecommunications Industries Analysis Project

Carol Weinhaus
Director
Telecommunications Industries Analysis Project
Public Utility Research Center
College of Business Administration
University of Florida

Project Address:
Meeting House Offices
121 Mount Vernon St.
Boston, MA 02108
(617) 367-6909

Bob Lock
Illinois Commerce Commission

John Bosley and Dennis Wax
NYNEX

Pat Constable, Mike Shelton, and Glen Sims
SBC Communications

Dan Harris
Bell Atlantic

Terry Monroe
New York Public Service Commission

Jeff Dupree
NECA

Bill Brown
BellSouth Cellular

Mark Jamison
Sprint

Peter Copeland
U S WEST

Charlene Lagerwerff
Federal Communications Commission

Rich Go
360° Communications

Charlie Rizzo
Bellcore

Paul Vasington
Massachusetts Department of Public Utilities

David Charlton
Corning Inc.

Hitoshi Imafuku
NTT America

Takashi Nakayama
InfoCom

Sanford Berg
University of Florida

Sally Simmons
Florida Public Service Commission

Ray Marner
Kalona Cooperative Telephone

Pete Martin
BellSouth

Douglas Rice
University of Florida

Copyright and Project Address

Telecommunications Industries Analysis Project:

A Snapshot in Time: LEC Switch Investment and Price Structures for Connections to the Switch Just before the Telecommunications Act of 1996

Carol Weinhaus, Bob Lock, John Bosley *et al.*
May 10, 1966

Presentation at the July 1996 NARUC Meeting, Los Angeles, CA

The Telecommunications Industries Analysis Project is associated with the Public Utility Research Center at the University of Florida College of Business Administration.

In addition to the work of project participants, the project appreciates the reviews of this paper by Jim McConnaughey of the National Telecommunications and Information Administration (NTIA); Doug Weiss of the Corporation for Public Broadcasting; David Berman of Bay Networks, Inc.; Brian Kahin of the Harvard Information Infrastructure Project, Harvard University; Linda Garbanati of Bellcore; and Bartlett Thomas of Continental Cablevision.

The views expressed in this paper are those of the Telecommunications Industries Analysis Project. The information in this paper is intended to provide general public information and does not constitute or foretell the official position of any of the parties who contributed to this paper. The opinions expressed in this paper do not necessarily reflect the views of the FCC or of any other agency or institution.

Graphics were produced by Erika Jobson, Cedar Designs, U.S. Route 1, HC 60 Box 3294, Camden, ME 04843, tel: (207) 236-3886.

For information on the project, contact Carol Weinhaus, at the project's address:

Meeting House Offices
121 Mount Vernon Street
Boston, MA 02108
Phone: (617) 367-6909
Fax: (617) 367-7127

Copyright © 1996 Carol Weinhaus and the Telecommunications Industries Analysis Project Work Group, Boston, Massachusetts. No part of this document may be reproduced in any form without written permission from the project director, Carol Weinhaus. Printed in the United States of America.

Table of Contents

List of Figures and Diagrams i

List of Acronyms iii

I. Introduction 1
Introduction 1

II. LEC Switch, Transport, and Local Loop 4
Major Network Elements 4
Connections by Type of Company or Customer 5
Basic Network Configurations for Connections between Companies 7
Switch Traffic Considerations: Duration/Capacity 11
Changes in How Customers Use Networks 13
Location of Connection Points 14

III. Percent of Total Switch Investment by Company/Customer 15
Definitions of Large and Small Switches 15
Percent of Total Switch Investment: Modeling Categories 15
Differences between Line Side and Trunk Side Connections 17
Percent of Total Switch Investment: Modeling Results 17
Other General Patterns for Switch Investment 18

IV. Different Price Structures by Type of Company 20
Different Price Structures 20
Methods for Setting Prices 20
Access Tariffs 21
Price Structures for Trunk Side Connections 22
Collocation Price Structures 26
Meet Point Price Structures 31
Price Structures for Line Side Connections 31
Enhanced Service Provider (ESP) Connection Price Structures 31

V. Summary 35
Summary 35

VI. Appendix A: Monopoly/Competition Time Line 36
Monopoly Competition Time Line 36
Local and Long Distance Services 36
Connection of Competing Companies 37
The Flurry of New Competitors 37
Telecommunications Act of 1996 38

VII. Appendix B: Definitions 39

VIII. Appendix C: Competitive Checklist 50

Table of Contents, cont.

IX. **Appendix D: Switch Modeling Definitions and Assumptions** 51
Definitions of Large and Small Switches 51
Basic Switch Investment Modeling Assumptions 52
Technical Definitions: Common to All Investments 53
Technical Definitions: Common to Line Side Investments 53
Technical Definitions: Common to Trunk Side Investments 53
Technical Definitions: Specific Services 53
Switch Capabilities Assumed in Model 55
Description of Types of Wireless Connection with a LEC Network 55
Requirements for Ports: Trunk Side and Line Side 56
Sources for Figure 4 and Switch Modeling —
Switch Traffic and Usage Statistics: Telephone Network 56
Sources for Figure 4 — Internet Network Statistics 58
Sources for Figure 4 — Cable TV Network Statistics 59

X. **Notes** 60

List of Figures and Diagrams

List of Figures

Figure 1 Monopoly/Competition Time Line, 1877-1996 3

Figure 2 Interconnection to ILEC Switch by Type of Company or Customer 6

Figure 3 Network Configurations for Connection to the LEC Switch 8
A. Long Distance Company Access 8
B. Trunk Side Port 8
C. Collocation: Trunk Side Port or Line Side Port 8
D. Meet Point on Trunk 9
E. Line Side Port 9
F. ESP by Line Side Port 9

Figure 4 Comparison of Traditional Switched Telephone Network Traffic, Switched Internet Use, and Non-Switched Cable TV Use 12

Figure 5 Percent Total ILEC Switch Investment by Type of Connection 16

Figure 6 Access: Network Configuration and Price Structures for LEC Switch Investment and for Routing Traffic through It 23
A. Long Distance Access Network Configuration 23
B. Long Distance Access Price Structures 23
C. Loop Customer Price Structures 24

Figure 7 Trunk Side Port Connection: Network Configuration and Price Structures for LEC Switch Investment and for Routing Traffic through It 25
A. Trunk Side Port Network Configuration 25
B. Trunk Side Port Price Structures 25

Figure 8 Collocation: Network Configuration and Price Structures for LEC Switch Investment and for Routing Traffic through It 27
A. Collocation: Trunk Side Port or Line Side Port Network Configuration . . 27
B. Other Carrier (CAP/ALT, Other LEC, Wireless Company, or Cable TV company) Pays LEC Directly for Collocation 27
C. IXC Pays LEC Directly for Collocation 28
D. Third Carrier Pays LEC Directly and Also Pays Middleman for Collocation 29

Figure 9 Meet Point: Network Configuration and Price Structures for LEC Switch Investment and for Routing Traffic through It 32
A. Meet Point on Trunk Network Configuration 32
B. Meet Point Price Structures 32

List of Figures and Diagrams, cont.

Figure 10 Line Side Port Connection: Network Configuration and Price Structures for LEC Switch Investment and for Routing Traffic through It 33
A. Line Side Port Network Configuration 33
B. Line Side Port Price Structures 33

Figure 11 ESP Line Side Connection: Network Configuration and Price Structures for LEC Switch Investment and for Routing Traffic through It 34
A. ESP by Line Side Port Network Configuration 34
B. ESP by Line Side Port Price Structures 34

List of Acronyms

List of Acronyms

2B + D	Two bearer (voice/data) channels and one data signaling channel
AIN	Advanced Intelligent Network
ALT	Alternative Local Telecommunications (service provider)
ALTS	Association for Local Telecommunications Services (trade association)
BOC	Bell Operating Company
BRI	Basic Rate Interface
Cable TV	Cable Television
Caller ID	Caller Identification
CAP	Competitive Access Provider
CCLC	Carrier Common Line Charge
CCS	Common Channel Signaling
CLEC	Competitive (or Certified) Local Exchange Carrier
CMRS	Commercial Mobile Radio Service
CMS	Commercial Mobile Service
CP	Central Processor
DS-1	Digital Service 1
DS-30	Digital Service 30; also referred to as DS-3
DS-512	Digital Service 512
E911	Enhanced 911 Services
ENET	Enhanced Network
ESP	Enhanced Service Provider
EUCLC	End User Common Line Charge
FCC	Federal Communications Commission
FX	Foreign Exchange
HH	Households
ICC	Interstate Commerce Commission
ICCF	Industry Carriers Compatibility Forum (ICCF)
ILEC	Incumbent Local Exchange Carrier
IP	Intelligent Peripheral
ISDN	Integrated Services Digital Network
IXC	Interexchange Carrier
LATA	Local Access and Transport Area
LEC	Local Exchange Carrier
Mbps	Megabits per second
MF	Multi-Frequency
MFJ	Modification of Final Judgment
NANP	North American Numbering Plan
NECA	National Exchange Carrier Association
NPA	Numbering Plan Area
NTIA	National Telecommunications and Information Administration
NY PSC	New York Public Service Commission
NXX	Central Office Code or Area Code (in a Telephone Number)
OCC	Other Common Carrier
PBX	Private Branch Exchange
PCS	Personal Communications Services
POP	Point of Presence

List of Acronyms, cont.

PRI	Primary Rate Interface
PSN	Public Switched Network
RBOC	Regional Bell Operating Company
RIC	Residual Interconnection Charge
SCP	Service Control Point
SLC	Subscriber Line Charge
SS7	Signaling System 7
SSP	Service Switching Point
STP	Signal Transfer Point
TIC	Transport Interconnection Charge
TV	Television

I. Introduction

Introduction

This paper describes how interconnection issues have been addressed in the U.S., including the current status of interconnection with traditional local telephone company networks. The objective of this paper is to provide a snapshot in time of investments and interconnection pricing structures associated with local telephone company switches. In the past, interconnections by different types of companies and customers were treated differently according to technical differences and to the politics of the day. This paper reveals four important points that policy makers should consider:

- Today's digital technologies are removing the technical differences between some types of connections, but not all.
- Today's political environment has removed many of the differences between various companies.
- Changes in how customers use networks (specifically, the increased use of faxes, Internet, point of sale, and other data services) are causing dramatic changes in the underlying assumptions about how networks need to be engineered.
- Even though the types of companies, the customer usage patterns, and technologies have changed, the old pricing structures have remained.

The *Telecommunications Act of 1996* requires sweeping changes in interconnection price structures. This *Act* not only requires telephone companies to interconnect with one another, the *Act* also provides rules and lays out new definitions for what constitutes a telecommunications carrier.[1]

> Each telecommunications carrier has the duty... to interconnect directly or indirectly with the facilities and equipment of other telecommunications carriers — *Telecommunications Act of 1996*, Sec. 251(a)(1).

In accordance with the *Act*, the ***Federal Communications Commission (FCC)*** initiated a proceeding to revise the rules or interconnection between companies.[2]

This paper sets the stage for discussion by describing a snapshot of *connections* to traditional local telephone company switches just before legislation passed. This paper does not attempt to define terms, such as "access" or "interconnect," since interpretation of the *1996 Act* is a matter of ongoing debate.

The legislation provides a blueprint for opening markets to competition and for removing traditional boundaries between telephone, ***Cable TV***, and broadcast industries. This paper lays the groundwork for revising the labyrinth of rules for setting prices for interconnection with local telephone companies. The term for these companies is ***Local Exchange Carriers (LECs)***. However, the *Act* also distinguishes between new entrants (also called LECs) and the traditional local companies, called ***Incumbent Local Exchange Carriers (ILECs)***. Therefore, in this paper, the term "LEC" refers to both the ILECs and the new market entrants.

I. Introduction, cont.

In order to allow quick identification of key concepts, these terms are in both boldface and italics when they first appear. These terms include names of different types of companies and customers that connect to the ILEC switch and names of major network elements.

It is important to note that current practices, which have evolved over time, are the starting point for implementing new interconnection policies and making sweeping changes. **Figure 1** provides an overview of the history of connection to the ***Public Switched Network (PSN)*** through the local exchange carrier. In the past, the rules for connecting companies and customers depended on the market philosophy (monopoly, competition, and regulation) in place at the time. The current move to competition can be seen as a pendulum swinging between the philosophies of monopoly and competition.[3] As **Figure 1** indicates, the United States is currently moving toward competition for a third time, nearly a century after the first cycle. For background for this chart, see **Section VI, Appendix A.**

The sections in this paper cover the following items:

- **Section II, LEC Switch, Transport, and Local Loop:** Describes the general types of connections with the LEC switch made by the companies or customers described in **Figure 1**. **Section II** also provides simple definitions of the LEC network elements associated with hooking up to the LEC network and routing traffic through it. In addition, there is a discussion of switch duration and capacity measures.
- **Section III, Percent of Total Switch Investments by Company/Customer:** Indicates the percentage of switch investments for what is common to all companies and services, and what is specific. Percentages are for both large and small switches currently being installed by ILECs.
- **Section IV, Different Price Structures by Type of Company:** Shows the different pricing structures for connection to the LEC switch and for routing traffic through it.
- **Section V, Summary:** Provides an overview of the main points covered in this paper: variation in prices for connection to the LEC switch, comparisons of percentages of LEC switch investment, and traditional switch engineering for traffic routed through the PSN.
- **Section VI, Appendix A: Monopoly/Competition Time Line:** Uses a time line to illustrate that when various companies and services arrived on the scene, different philosophies toward monopoly, competition, and regulation were dominant.
- **Section VII, Appendix B: Definitions:** Provides definitions for the names of key competitors and concepts.
- **Section VIII, Appendix C: Competitive Checklist:** Contains the language from the *Telecommunications Act of 1996* defining the competitive checklist that the Bell operating companies (BOCs) must meet before they may provide interLATA (Local Access and Transport Area) services.
- **Section IX, Appendix D: Switch Modeling Definitions and Assumptions:** Provides greater detail on the definitions and assumptions used to model the switch investment.
- **Section X, Notes**

Figure 1: Monopoly/Competition Time Line, 1877-1996

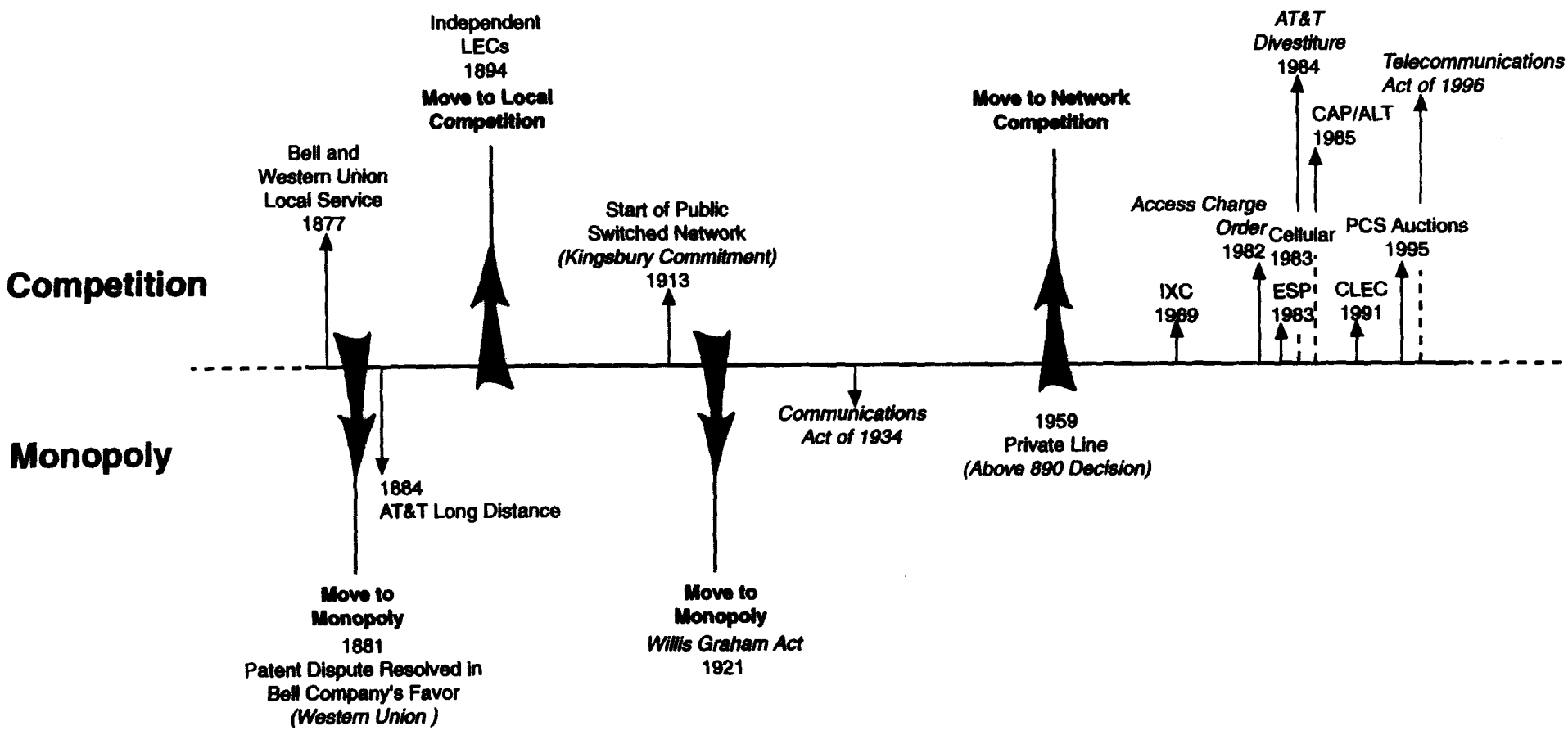

Copyright © 1996 Carol Weinhaus and the Telecommunications Industries Analysis Project Work Group, Boston, Massachusetts.

II. LEC Switch, Transport, and Local Loop

Major Network Elements

The types of connections for companies described in **Section II** depend on the technology, rules, and market philosophy existing at the time when the companies arrived on the scene. This paper focuses on the "local" switch since sooner or later traffic has to pass through this switch because it connects customers to the public switched network, or PSN. New entrants want to reach *all* customers on the PSN; and currently, the only way for everyone to reach everyone else is to route traffic through an ILEC switch at some point.

This paper is a snapshot of the PSN at the time of the *Telecommunications Act of 1996*. Points of connection other than the local switch, such as the line to the customer, may play a major role in the future. For a discussion about other points of connection that are closer to the customer, see **Section III, Location of Connection Points.**

In addition, this paper covers connections to the LEC switch because it is a major network element central to the interconnection requirements in the *Telecommunications Act of 1996*. The *Act* defines a checklist of minimum network/service requirements that the BOCs must provide in order to open local markets to competition. Completing this checklist allows a BOC to provide in-region interLATA long distance."[4] (For the complete checklist, see **Section VIII, Appendix C.**) Therefore, this section focuses on the following requirements from the Act's competitive checklist: loops, transport, and switching.[5] The definitions for these network elements are as follows:

- ***Loop Transmission:***
  The communications path from the company's switch to and from the customer is commonly called the ***local loop***, commonly called the ***"loop"***. Loops are provided by a number of different technologies. For a **wireline** transmission, the path is made of copper wire, coaxial cable, or optical fiber. Wireline networks include the traditional telephone network. Loops are also called ***access lines***, or even shortened to just ***"lines."***[6]

- ***Transport:***
  A ***trunk*** is a transmission route between two switches. These routes are also referred to as ***transport facilities*** in LEC networks.

- ***Switching:***
  A ***switch*** is a specialized computer that provides, among other functions, the ability to connect and disconnect one customer to any other customer connected to that switch, or to reach *all* other customers through trunks connected to the PSN. The LEC switches that connect loops with the PSN are also called ***central office switches***, or ***end office switches***, since the central office of the local telephone company was historically the building that housed these switches. For clarity in describing interconnection issues, this paper focuses on the central office connections.

  It should be noted that LECs may have other types of switches to which other companies may connect. Switches that link only trunks are called ***tandem*** switches. These switches simplify the routing of calls by avoiding the need to connect every switch to