every other switch. Instead, a tandem switch collects traffic from multiple switches, serving as a central traffic routing point. Tandem switches perform a function similar to that of an airline hub where passengers fly into a central point for routing to other destinations.[7] Often the tandem switch is the location of the connection point between two companies. In this case, the company that owns the tandem switch routes the call through trunks connected to the central office switch. These facilities are not covered in this paper since the focus is on the LEC local switch.

Figure 2 indicates three of the major network elements associated with interconnection with the LEC network: loop, transport, and switch. This figure provides a high-level, simplified view of complex relationships among connecting companies. There are two general categories of connection with the switch based on early technologies: loops and trunks. The earliest switches routed calls among only those loops attached to the switch. Later, trunks routed calls between switches. Today, the term ***trunk side*** refers to the ***port***, or location, on a switch where a trunk connects. The term ***line side*** refers to the port on a switch where the loop connects.[8] See **Section IX, Appendix D, Requirements for Ports: Trunk Side and Line Side**, for a comparison of the technical differences between trunk side and line side connections.

Connections by Type of Company or Customer

The focus of **Figure 2** is on the different types of companies and customers that connect to the ILEC switch. The following descriptions are part of the snapshot in time presented in this paper. However, as technologies continue to evolve and services continue to change, the traditional methods for defining services, measuring traffic, and designing networks become increasingly meaningless. For example, as more people work at home,[9] the distinctions between small business use and residential use become increasingly hazy. It should also be noted that cellular mobile telephone services, defined by the FCC as a local exchange service, have never made a distinction between business and residential customers. The types of connections illustrated in **Figure 2** can also be linked to the time line in **Figure 1**.

The following switched services have line side connections to the ILEC switch: ***Residential*** (service to homes), ***Single-Line Business*** (one-line service), ***Multi-Line Business*** (two or more lines in service), and ***Enhanced Service Providers (ESPs)***. The following companies generally have trunk side connections (between the ILEC switch and another company providing services): ILEC-to-LEC, ***Interexchange Carrier (IXC)***, and ***Competitive Access Provider (CAP)/Alternative Local Telecommunications (ALT) Provider***.[10] In some cases, the company connecting to the ILEC switch may use both line side and trunk side connections. These may be ***wireless companies***, also called ***Commercial Mobile Service (CMS) Providers*** — which include ***Cellular*** and ***Personal Communications Services (PCS)***. **Figure 2** refers to connections between companies and not to connections between the ILEC and the ESP/wireless company's customers. From the ESP customer's viewpoint, the connection to the ILEC switch is through residential or business services. From the wireless

Figure 2: **Interconnection to ILEC Switch by Type of Company or Customer**

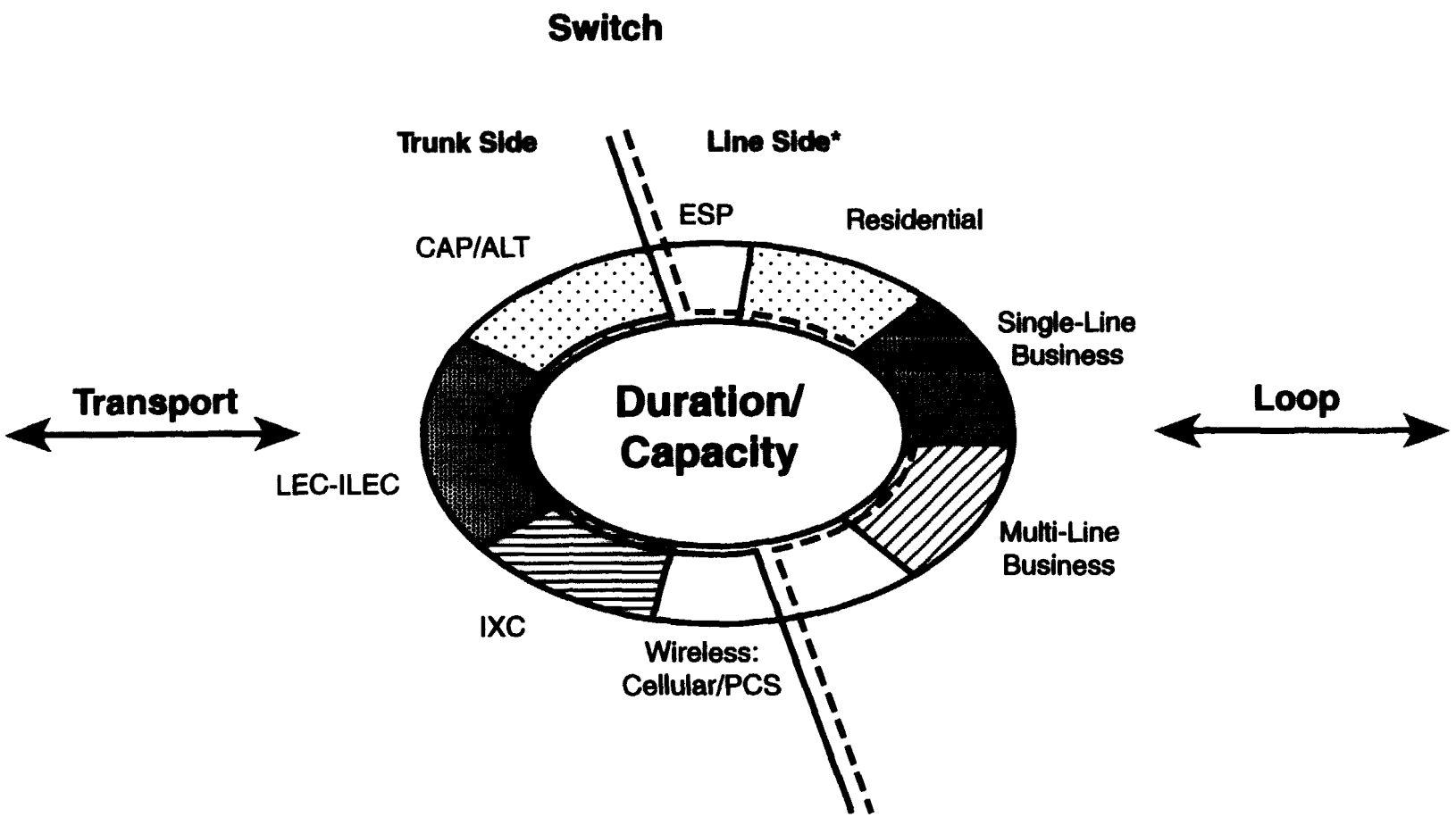

*In some cases, IXCs, new entrants, and others may also use line side connections.

Copyright © 1996 Carol Weinhaus and the Telecommunications Industries Analysis Project Work Group, Boston, Massachusetts.

customer's viewpoint, the connection to the ILEC switch is through the wireless carrier's switch.

Providing services, such as ***E911 (Enhanced 911)*** or operator services, to residential and business customers requires additional functions in a LEC switch. See **Section IX, Appendix D**, for a definition of these service specific features.

Basic Network Configurations for Connections between Companies

Before there can be a discussion on variations in price structures for connections between companies, it is important to understand the basic network configurations for these connections. The various diagrams in **Figure 3** illustrate the major types of network configurations for connections by various companies to the LEC (ILEC or new market entrant) switch. It is important to note that in **Figure 3** the emphasis is on the LEC switch and how other companies and local customers connect to it. For some connecting companies, the point of entry into the LEC network, is a tandem switch and not the local LEC switch. In this case, the call will travel through additional facilities (more trunks and switches). Therefore, the picture for some connections is more complicated than those covered in this paper.

Figure 3A illustrates the traditional network configuration for "access" connections between a long distance company and the LEC switch. This diagram reflects the long history of local and toll calls — from the start of the Bell-Independent partnership (formed to connect independent company local switches with the Bell long distance network) up through the breakup of AT&T.

In the case of an IXC, the local customer's traffic goes into a line side port on the LEC switch and out a trunk side port. A trunk (transport facility) carries the traffic to a specific location, called a ***Point of Presence (POP)***,[11] where an IXC connects to the LEC network. This location in a LEC service territory is where all such connections are made.[12] The IXC can either route traffic received from the LEC switch through its own network or pass the traffic to another company's network connected to the IXC. Other companies that may connect to the IXC POP (in order to use the access configuration to reach LEC local customers) include wireless companies and other LECs.

Figure 3B shows a network configuration in which a company, referred to as the "Other Carrier," connects one of its switches with the LEC switch using a LEC trunk. This configuration is similar to that in **Figure 3A**. In this configuration, the Other Carrier may be another LEC, a CAP/ALT, a wireless company, or a cable TV company.

The diagram in **Figure 3C** shows the network configuration for a variant of switch-to-switch connections — ***collocation*** arrangements. With collocation, a carrier pays for space in the LEC's building (called a ***central office***, or ***wire center***) and obtains trunk side ports or line side ports on the LEC switch. This location may be a physical presence or may be a

Figure 3: Network Configurations for Connection to the LEC Switch

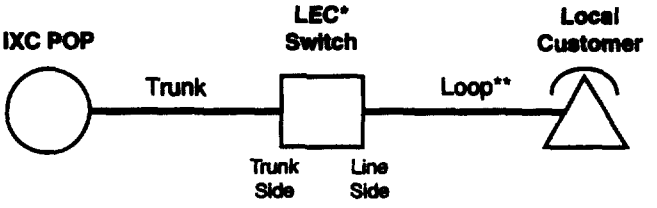

3A. Long Distance Company Access

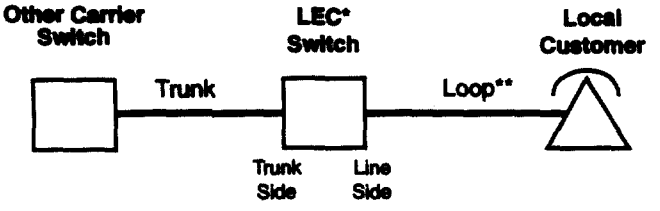

3B. Trunk Side Port

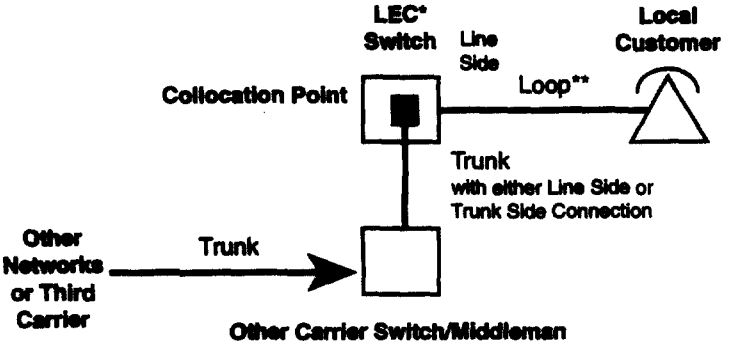

3C. Collocation: Trunk Side Port or Line Side Port

*Either an ILEC or a new market entrant.
**Also referred to as access line.

Copyright © 1996 Carol Weinhaus and the Telecommunications Industries Analysis Project Work Group, Boston, Massachusetts.

Figure 3: Network Configurations for Connection to the LEC Switch, cont.

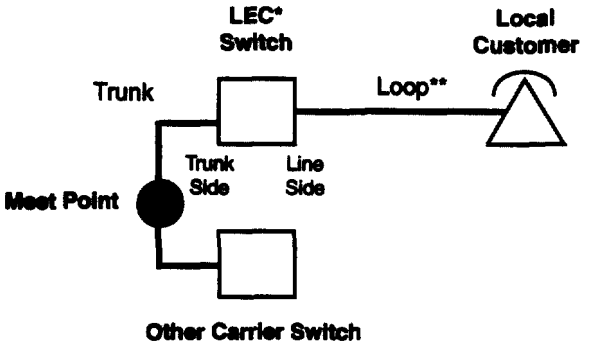

3D. Meet Point on Trunk

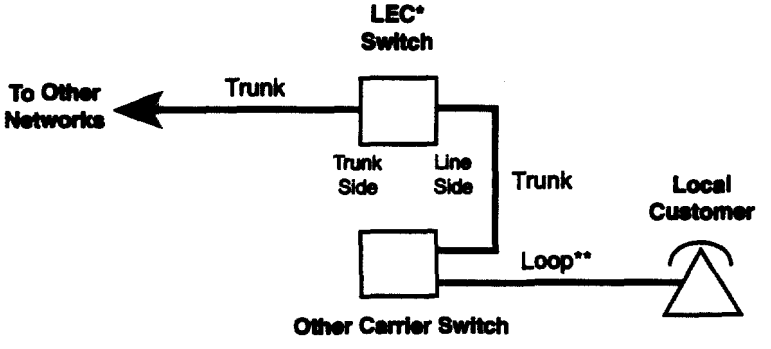

3E. Line Side Port

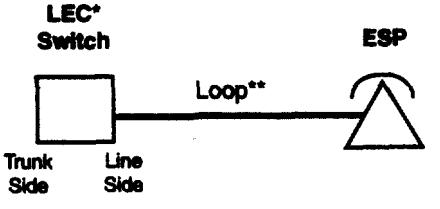

3F. ESP by Line Side Port

*Either an ILEC or a new market entrant.
**Also referred to as access line.

Copyright © 1996 Carol Weinhaus and the Telecommunications Industries Analysis Project Work Group, Boston, Massachusetts.

virtual arrangement — the connection is outside, but near to, the building housing the switch.

In **Figure 3C**, the Other Carrier collocates in the LEC central office and connects to either a trunk side port or a line side port. In this configuration, the Other Carrier may be another LEC, a CAP/ALT, a wireless company, an IXC, or a cable TV company. Often, a CAP/ALT will serve as a middleman connecting traffic from an IXC POP to the LEC switch. Also, a third party may connect to the Other Carrier's switch. This third party may be another LEC, an IXC, a wireless company, a cable TV company, or a large business customer.

In ***meet point*** billing arrangements, the LEC and the Other Carrier connect at a mutually agreed upon point on the trunk between their two switches (**Figure 3D**). The same types of companies that use collocation connections may, as an alternative, use meet point connections. Typically these arrangements are used by small telephone companies, and more recently, by new entrants who lack direct connections to IXCs. It should be noted that at the time of the *Act*, collocation and meet point arrangements were optional for the Other Carrier, but not for the LEC.

Figure 3E shows another network configuration used by wireless companies and CAPs/ALTs. Here the Other Carrier connects to the LEC switch through a line side port in order to route traffic to other networks, including the PSN. There are technically different types of wireless connections to the LEC switch (see **Section IX, Appendix D**, for details.) In the early days of IXC competition, the IXCs used line side connections.[13] Some IXCs still use these types of connections.

The last diagram shows an ESP connection (**Figure 3F**). This configuration shows how customers reach ESPs. In most cases, the ESP's own customers make the calls and the ESP receives them. (While these figures focus on how customers reach an ESP through the telephone network, ESP companies also need communications services to operate their business — purchasing, sales, etc. These business connections are the same as any other business and, therefore, are not covered in these diagrams.)

In **Figure 3F**, the ESP company is the customer and generally connects to the LEC switch through a loop with a line side port. In this diagram, the ESP's connection is similar to any local business customer connecting to the LEC switch. The ESP may take incoming traffic from its customers and directly provide services through a data base, may send the call to another database across the country, or may connect the customer to the Internet. This connection provides the ESP with a convenient way for its customers to call into the ESP service.[14]

Switch Traffic Considerations: Duration/Capacity

The PSN is currently engineered for traditional telephone voice and data traffic. The major properties of traffic passing through a switch are how many calls (capacity) and how long (duration). The following is a list defining key concepts that are used to determine what's needed in a given switch:

- ***Switch Capacity***: Theoretically a central office switch may be able to have all its loops and trunks in use simultaneously. But in reality, this number is improbable. If every customer were to dial a call into this switch at the same time, the switch would not be able to set up all these connections. The result is that calls are ***blocked*** (not completed). The average local switch is engineered to switch approximately 20% to 45% of its total loops at a given time. However, other usage measurements also determine switch capacity and components.

- ***Trunk Capacity***: A central office switch may be able to connect all the line side customers with one another. However, if every customer tries to make a call at the same time to a destination reached by trunks, a percentage of these calls will not be completed, and the call will be blocked. The result is that the customer can't make the call.[15] Switch engineers look at traffic patterns to determine the ratio of trunks to lines. **Figure 4** shows the average trunk to loop ratio used for traditional LEC switches. The range is from 1:4 to 1:10 for the ratios of trunks to loops.[16] The actual ratio depends on various factors such as number of calls, calling patterns (intra-office v. inter-office), call duration, and demand for specific services — i.e., call forwarding, call waiting, ***Centrex***, or ***Integrated Services Digital Network (ISDN)***. With a low ratio (1:10), call blocking (the inability to switch a call) may occur.

- ***Line Concentration Capacity***: A ***line concentration module*** connects traffic from several loops into the switching module of a digital switch. Essentially, the line concentration module is a place where the traffic is concentrated to fewer paths.[17] This allows more efficient use of facilities to the switch since high-use loops and low-use loops can be combined to share a common path into the switching module, thereby increasing the efficiency of the switching. An increase in traffic volume requires a decrease in the line concentration ratios, such as a decrease from a 8:1 to a 6:1 ratio of loops to paths. If too many loops are in use, calls never make it into the switching module and the customer making the call either hears a fast busy signal (an overflow tone) or hears no a dial tone.

- ***Duration***: This is the length of time a call takes — from call setup to call termination. Duration is greater than conversation time. Traditional telephone voice traffic ranges from 2 to 5 minutes per call. The actual duration of voice or data transmissions may be much larger or much smaller. For example, the average Internet connection from a home is 1 hour and 8 minutes, while a credit card verification takes only seconds.[18] The model in this paper assumes average traffic of 5 minutes (300 seconds) for all types of traffic.[19]

Figure 4: Comparison of Traditional Switched Telephone Network Traffic, Switched Internet Use, and Non-Switched Cable TV Use

Description of Switch Parameter:	*Traditional Telephone, Switched:*	*Internet, Switched:*	*Cable TV, Not Switched:*
Percent of U.S. Households with Service	94%	4%	63%
Holding Time per Connection: The average length of time per individual connection.	Assumption for model: 5 minutes per call (300 seconds per call).	1 hour 8 minutes per average session length.	Not Switched.
Capacity Measurements:	Various methods to measure capacity:	If the traditional telephone network is used for Internet access, then the engineering criteria are the same. Otherwise, depends on engineering of individual networks (nodes and transmission routes) owned by multiple parties. Also depends on how individuals connect to the Internet.	Not Switched, 100% Connected.
■ ***Trunk to Line Ratio:*** The largest percent of loops (lines) that can be routed to a destination beyond the switch at any given time. This is one measure of peak capacity.	Range is 1:4 to 1:10. Assumptions for model: Small Switch has 1:6 Ratio, or 16.7%; Large Switch has 1:5 Ratio, or 20%.		
■ ***Percent of Loops in Use:*** The largest percent of loops (lines) in use. This is a second measure of peak capacity.	Not an engineering criterion.		
■ ***Line Concentration Ratio:*** This is the number of loops whose traffic is channeled into a single path by one line concentration module. This is a third measure of peak capacity.	Assumption for model: 6:1 Ratio		
Busy Hour Call Volume per Hour: The number of calls a switch must be able to handle during its busiest hour, called the "peak load time."	Assumptions for model: Small Switch has 3,600 calls; Large Switch has 100,000 calls.		Not Applicable.
Call Completion: Percent of calls completed (destination point answers the call).	Assumption for model: 80-85%.		

This figure excludes information on lines not in service or needing maintenance. The average weekly viewing is for total TV (broadcast and cable TV) in households that have cable TV service is 59 hours and 12 minutes. **Section IX, Appendix D**, for sources and background on the data for this figure.

Changes in How Customers Use Networks

The current switches have been engineered for traditional parameters **(Figure 4)** while new technologies and new services are creating the need for different parameters. The cause is the widespread use of the traditional telephone voice network for data transmission. From the customer's view, these are faxes, e-mail messages, telecommuting from home, Internet use, point of sale transactions, and online information services.

Adding to the impact of increased data transmissions is the increased ability to tailor services to individual customers, such as offering personal 800 numbers. Another indicator is that if new 3-digit area codes (called ***Number Plan Area***, or ***NPA***, codes) continue to be assigned at the current rate of approximately one a month, the supply of 10-digit phone numbers will be used up around the year 2040.[20] Yet another example is the increase in home-based Internet users. While current Internet use is an extremely small fraction of the switched local traffic, there have been instances where customers have been unable to get a dial tone due to a large number of ESP users feeding into a given telephone line concentration module.[21] In these cases, calls are blocked and some customers are unable to get even a dial tone. While these cases are rare, they indicate that if Internet usage increases, switches may need reengineering.

In addition to the increases in calls of a longer duration (online services, Internet) than that of an average voice call, there have also been increases in calls of shorter duration, such as faxes, credit card justification, and point of sale debit cards.[22]

The column with telephone statistics in **Figure 4** focuses on what happens when a call is sent through the switch. The quality of service issue contains more elements than those presented in **Figure 4**, and this issue is not covered in this paper.

Figure 4 compares some usage and capacity measurements for traditional telephone network traffic with Internet use and with cable TV use. Cable TV has been added to this list to indicate that there are other alternatives to the traditional telephone industry for Internet connections. It should be noted that traditional cable systems have been engineered for one-way traffic (from the company's head end to the customer), but this may not be necessarily true in the future. Also, a few cable companies already connect their head end to a LEC switch to gain entry to the PSN.

It is the sum of all these changes in technologies and in markets, rather than any one specific trend, that is driving the need to change network parameters. As time goes by, modems get faster, more data can be sent through the same channel (better data compression), and more time is spent on line. This pattern accelerates the need for even more changes. When images took forever to download, customers abstained from downloading. As download speeds and software improved, more customers downloaded more information. This cycle of ever expanded, "bandwidth hungry" information creates the need to reengineer or upgrade existing networks and to build new ones.

Location of Connection Points

The 1996 *Act's* competitive checklist presents three major network elements — loop, local switch, and local transport. Inherent in these three elements are two points of interconnection with the switch: trunk side and line side. The diagrams in **Figures 2 and 3** are simplified to illustrate this.

There are, however, other ways to connect not only to the switch, but also to other points in the LEC network. Part of the debate associated with the implementation of the *Act* is about the future locations for interconnection. The *Telecommunications Act of 1996* states that the ILEC has the:

> duty to provide, for the facilities and equipment of any requesting telecommunications carrier, interconnection with the local exchange carrier's network....at any *technically feasible point* within the carrier's network [emphasis added].[23]

In addition to technically feasible, the *Act* requires that the interconnection "rates, terms, and conditions...are just, reasonable, and nondiscriminatory,"[24] and that interconnection "is at least equal in quality to that provided by the local exchange carrier to itself or to any subsidiary..."[25]

Even before this legislation passed there were debates over where companies and customers can connect to the LEC network.[26] For example, one area of debate is whether one of these points is on the path of the loop between the LEC switch and the customer.[27] Along this path, multiple loops may join together at a single connection point. Various companies have expressed an interest in gaining connections to their customers at these points as well.

III. Percent of Total Switch Investment by Company/Customer

Definitions of Large and Small Switches

Figure 5 shows the results of modeling based on assumptions, as well as averages and samples applied to the engineering standards for a current digital switch. This figure gives the percentages of total investment for major features of both large and small switches. This investment is for hardware and for associated software. This paper focuses on the initial investment (what a company pays when it purchases a specific switch) and not on the cost of upgrading technology or adding additional customers or services. Investment reflects purchase price, which is different from "common costs" and "incremental costs," as defined by economists."[28] For simplicity, the investments modeled exclude overheads for engineering, installation startup, and taxes. Generally, small switches serve primarily rural areas (**Figure 5A**) and large switches serve metropolitan areas (**Figure 5B**).

Since the objective of this paper is to indicate patterns and percentages, the assumptions were based on averages from large companies for both large and small switches, and from reports to the National Exchange Carrier Association (NECA) for small switches. The type of switch modeled is a digital switch representing current LEC purchases. For definitions of the services and for the assumptions used to model switch investments, see **Section II, Figure 4** and **Section IX, Appendix D**. The intent is to provide a snapshot of the PSN *before* implementation of the *Telecommunications Act of 1996*.

Percent of Total Switch Investment: Modeling Categories

The illustrations in **Figure 5** show the percentage of switch investment for the following categories: percent common to all, percent common to line side, percent common to trunk side, and the percent for service-specific or company-specific. These are defined as follows (see **Section IX, Appendix D**, for details):

- *Common to All:*
  These investments are needed for switching any type of service. This category includes cable and framework costs, power systems, operations support systems (maintenance and testing), call recording for billing, and other call services (i.e., announcements and tones). Common equipment generally does not vary with switch size (number of lines and trunks), with the exception of the central processor unit (whose capacity may be expanded).

- *Common to Line Side:*
  These investments are associated with any connections to the line side of the switch. This category includes line cards, line group frames and shelves, line test equipment, line concentrating equipment, and circuit packs. Some of this equipment forms the line side port.

Figure 5: Percent Total ILEC Switch Investment by Type of Connection

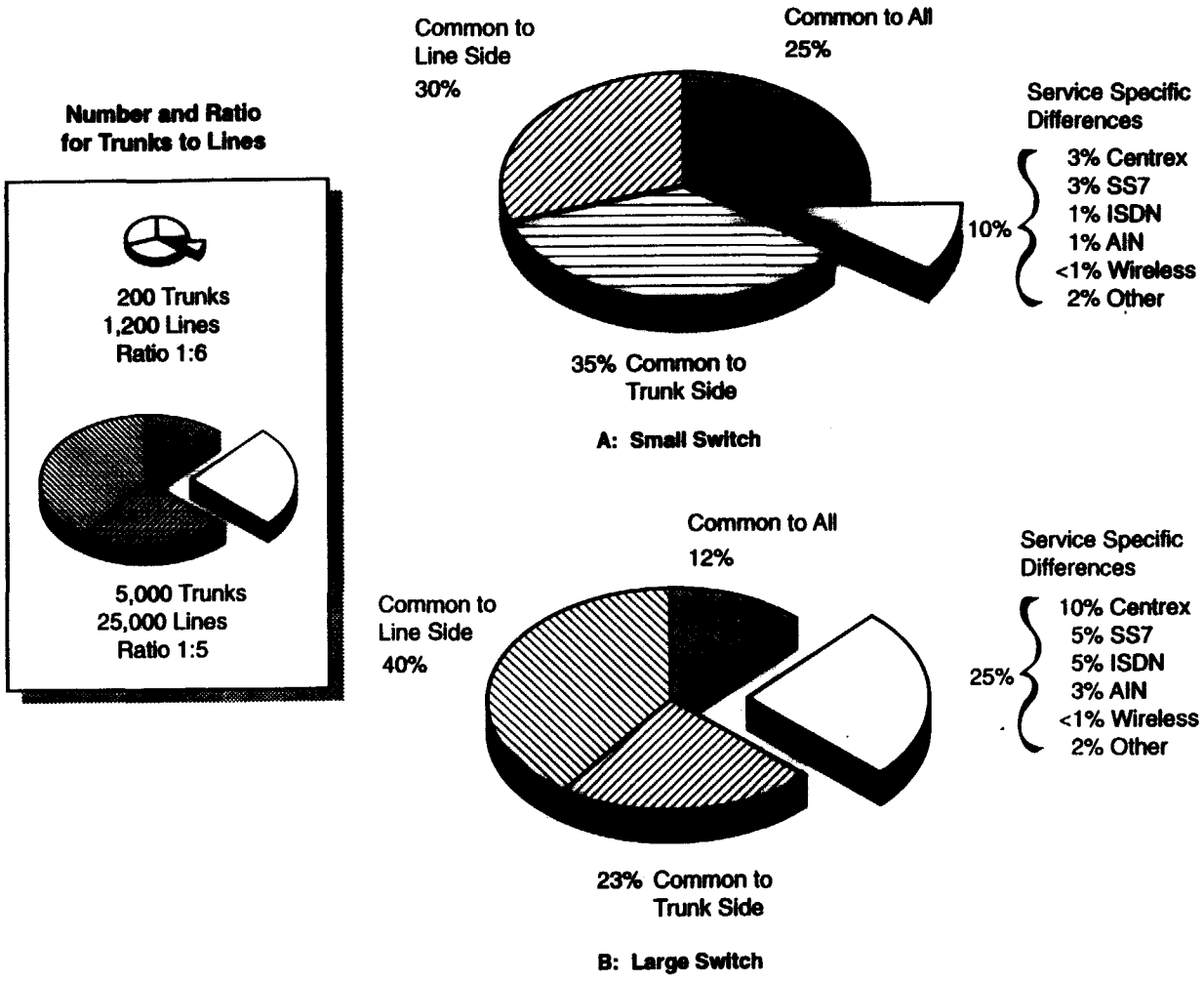

Note: Percentages are based on modeling assumptions (see **Section IX, Appendix D**).

Copyright © 1996 Carol Weinhaus and the Telecommunications Industries Analysis Project Work Group, Boston, Massachusetts.

- *Common to Trunk Side:*
  These investments are associated with any connections to the trunk side of the switch. This category includes trunk cards, shelves, frames, trunk test equipment, circuit packs, and links to the central processor in the switch. Some of this equipment forms the trunk side port.

- *Service Specific:*
  These investments are associated with specific services or functions — Centrex, ***Signaling System 7 (SS7)***, ISDN, ***Advanced Intelligent Network (AIN)***,[29] wireless, and other (various miscellaneous services, such as call waiting, voice mail, and E911). For definitions of these services, see **Section IX, Appendix D.**

Differences between Line Side and Trunk Side Connections

There are significant differences between the type of equipment and the investment for a trunk side connection verses a line side connection. On a per connection basis, the type of equipment used for trunks is inherently more expensive than the equipment used for loops. Not only is the total investment for the trunk equipment more expensive, but this total is also distributed over a smaller number of connections.

For example, fewer trunks than lines feed into the switch. The line side equipment generally has from 1,280 to 5,760 lines connected to a single line concentration module.[30] line concentration modules can be connected to a single line group controller that feeds traffic (voice/data) into the switch module. For trunk side equipment, 20 to 40 trunks can be connected to a single trunk group controller and on to the switch module.

Percent of Total Switch Investment: Modeling Results

The main points of **Figure 5** are as follows:

- *The major difference between types of interconnection depends on whether the connection is on the line side or on the trunk side.*
  In the model, the small switch has 30% of the investment common to all line side connections and 35% common to all trunk side connections. The large switch has 40% of the investment common to all line side connections and 23% common to all trunk side connections.

- *A significant portion of the investment is common to all connections.*
  In the model, the small switch has 25% of the investment common to all connections and the large switch has 12% of the investment common to all connections.

- *When taken in total, the sum of the service-specific investments is significant.*
  In the model, the total of the service-specific investments is 10% for the small switch and 25% for the large switch.

- *With the exception of Centrex services, the service-specific differences are relatively small.*
  The range of percent of investment is generally 5% or less for specific services. The only exception is Centrex services on a large switch (assumed in the model to have many large business customers). In the model, the percentage of investment specific to Centrex services is 3% for the small switch and is 10% for the large switch.

Note that **Figure 5** shows percentages, not dollars. Percentages may be different for different modeling assumptions (traffic patterns, type of companies connecting, mix of services, etc.).

Other General Patterns for Switch Investment

As additional lines are added to the switch, the utilization of the switch's common components increases. This may affect some or all of the switch components depending on which services are used. For example, increases in the number of lines or changes in traffic patterns affect the investments in the line side and trunk side categories. As additional lines are added, the utilization of the switch's capacity increases, and changes in the computing equipment and software may be required. In the model used for this paper, one element that produces a decrease in the percent of "common to all" investment for the larger switch (as compared to the smaller switch) is the increase in the number of lines and trunks.

Furthermore, the ratio of trunks to lines is based on the amount and type of calls. Changes in any of these patterns affect the switch investment. For example, more calls between customers attached to the same local switch require fewer trunks. More calls beyond the switch require more trunks.

The investment for services that are ordered on a per line basis — such as ***Caller Identification (caller ID)***, call forwarding, ISDN, and Centrex — is sensitive to the size of the switch (number of lines and trunks) and to the demand from customers.

The Centrex investment reflects demand patterns. In a mostly rural area, with predominately residential service, the investment in Centrex is small. In contrast, more urban areas, with a number of large business customers, this investment is large. The investment in Centrex software is currently high. However, once the initial investment in software and lines are made, the investment per new line decreases as more Centrex lines are added. Compared to other services that require service-specific software, Centrex also requires a relatively high percentage of investment in software compared to its other components.

III. Percent of Total Switch Investment by Company/Customer, cont.

The SS7 investment is less for a small switch since there are usually more calls between customers on the same local switch (intra-office) and this type of call does not use SS7 technology. ISDN, AIN, and wireless investment reflect demand. Currently large businesses and some Internet users purchase ISDN services. With AIN the majority of the investment resides outside of the switch and the switch portion is essentially software. Wireless investment, which covers line side and trunk side ports with the associated software is minimal at this time. The investment in the "other" services category is primarily for software.

IV. Different Price Structures by Type of Company

Different Price Structures

Historically, there have been various methods for setting interconnection prices. Some rules apply to some companies, but not to others; some rules apply to some industries, but not to others; and some rules apply to some technologies, but not to others. For instance, the price structures for IXC connections are different than those for new entrants.

This section shows not only that the rules and methods vary, but also that inconsistent pricing policies provide incentives for types of connections that otherwise might not be made.[31] This section indicates the different pricing structures for connection to the LEC switch and routing traffic through it. This section also sets the context for the sweeping changes in the way prices for interconnection will be set in the future.

The *Telecommunications Act of 1996* requires interconnection with the ILEC network at "any technically feasible point." It also adds that the prices must be "just, reasonable, and nondiscriminatory," and provides rules for price negotiations, for regulatory oversight,[32] and for pricing standards that are:

> based on the cost (determined without reference to a rate-of-return or other rate-based proceeding) of providing the interconnection or network element (whichever is applicable), and...non discriminatory, and...may include a reasonable profit.[33]

Figures 6 through 11 combine the various network configurations from **Figure 3** with the rules for how prices are set for connecting to the LEC switch and for routing traffic through it. While there are other pricing elements (tandem switching and others), the following discussion focuses on connections to the LEC local switch and on routing traffic through it. The charts below each diagram answer the following questions: Who pays for it? How is it paid for? and, How is the price set?

These charts indicate that there are large variations in pricing structures for network configurations that are essentially the same, or are only slightly different. (See **Section II** for a discussion of network configurations and technical differences. See **Section III, Figure 5** for differences in the percent of switch investments for the major types of connections.)

Methods for Setting Prices

A number of methods have been used to determine prices for connections with the switch:

- ***Federal and State Tariffs:*** Prices filed according to federal regulations by the FCC governing interstate calls and according to regulations by individual state regulatory commissions for calls within each state.

- ***Negotiated Contracts:*** Companies negotiate with one another and use contracts to set the price. Sometimes regulatory approval is required.

- ***Bill and Keep:*** Each company bills its own customers for local calls and keeps all the money it collects. There are no transfers of dollars between companies.

In the future, additional methods are also possible. For example, there is the broadcast TV model where advertisers pay for the network in the prices for advertisements, or the cable TV pay-per-view model in which customers pay for specific programs beyond the price of basic cable TV service.

Access Tariffs

The diagram in **Figure 6A** illustrates the network configuration for federal and state access prices[34] from **Figure 3A**. The chart **(Figure 6B)** below the diagram answers the three questions: Who pays for it, how is it paid for, and how is the price set?

The tariffed rates reflect the long history of local and toll calls — from the start of interconnection of local to long distance networks by the Bell-Independent partnership (formed for this purpose) up through the breakup of AT&T and the creation of access charges. Set by federal and state tariffs, these access prices are for origination and termination of calls through the LEC switch.

In order to clarify structures used for access charges, this section divides the discussion into two parts: one is the actual price elements that cover switch investment, and the other is price elements that are based on switch usage. This means some payments cover other network elements (not the switch) but these payments are based on measures of switch use. In **Figures 6 through 11**, these usage measurements are referred to as "routing through the switch." It is important to separate these two issues for the ongoing policy debates over revision of interconnection charges. This discussion only covers price structures for switched services (traffic routed through the local switch).

Long distance companies pay for the LEC switch investment through a per minute of use for local switching.[35]

In addition, the long distance companies pay for recovery of a portion of loop investment based on usage of the local switch (a per minute of use charge, called in the ***Carrier Common Line Charge***, or ***CCLC***). This is referred to as an "access charge" because it gives the long distance companies and their customers access to the PSN. The "access" allows for the origination and termination of a call. Long distance companies also pay a portion of other LEC investments (tandem switching, signaling, trunks between tandem switches and the local switch) and miscellaneous costs based on usage of the local switch (a per minute of use charge, called the ***Residual Interconnection Charge***, or ***RIC***).[36] The usage charges paid by the long distance carriers may include subsidies for companies in high-cost areas, and for keeping local service rates low.[37]

It is important to note that long distance companies pay access charges on both sides of the call (originating and terminating).

The LEC's local customers generally pay a monthly flat rate (but sometimes a per minute per call or some other form of measured service) for local telephone service **(Figure 6C)**. This includes investment in the local switch. However, they also pay a monthly flat rate for access into and out of the long distance network through the LEC local switch. This "access" charge is called the ***Subscriber Line Charge (SLC)*** and recovers a portion of the loop investment.[38] The SLC is included in this discussion because the local loop is needed to route traffic though the switch to customers.

The local customers — residential, single-line business, and multi-line business — subscribe to local telephone service and generally pay their LEC for calls they make (originate).[39] These traditional switched local services have origins in the first telephone services offered in the late 1800s. Some services, such as 800 services or ***private line services***,[40] have not been considered part of local exchange services until recently.[41] For 800 services, the customer that receives the call (terminating calls) pays their LEC for incoming calls.[42]

Price Structures for Trunk Side Connections

Figure 7A shows the network configuration where the Other Carrier connects one of its switches to the LEC switch using a LEC trunk. In this arrangement, the Other Carrier is another LEC, a CAP/ALT, a wireless company, or a cable TV company.

In addition to paying for the trunk, the Other Carrier pays for switch investment by paying a monthly flat rate for the trunk side port and by paying a per minute of use charge for switching. For wireless companies, this charge may be discounted below the standard rate for access.

These companies have the opportunity to negotiate with the LEC for interconnection prices. Once determined, these prices can be formalized by contract or by tariff.[43] However, for wireless carriers, the contract or tariff can only be changed through additional negotiations.

If the company is another LEC, their customers pay prices set by tariffs. The wireless, CAP/ALT, and cable TV customers pay prices set by their companies. In the case of cellular or wireless customers, these prices are effectively set by competitive forces in the marketplace. In the case of CAP/ALT customers, these same competitive forces impact pricing decisions. However, the starting point is based on the tariffed price of the incumbent LEC's competing service, which was established through regulation.

Figure 6: Access: Network Configuration and Price Structures for LEC Switch Investment and for Routing Traffic through It

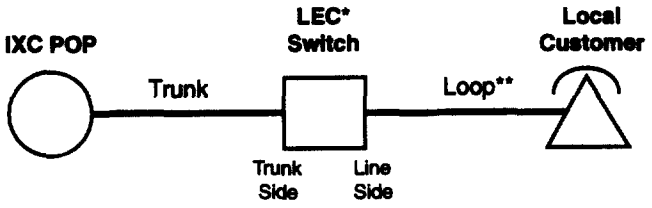

*Either an ILEC or a new market entrant.
**Also referred to as access line.

Copyright © 1996 Carol Weinhaus and the Telecommunications Industries Analysis Project Work Group, Boston, Massachusetts.

Figure 6A. Long Distance Access Network Configuration

Who pays for it?	*How is it paid for?*	*How is the price set?*
Long distance companies: IXCs, wireless companies, and new LECs.	Switch Investment: A per minute of use charge for the local switch.*	Federal and/or state tariffs. The usage charges may include subsidies for companies in high-cost areas, and for keeping local service rates low.
	Routing through the Switch: A per minute of use charge for a portion of loop investment based on usage of the local switch (called the CCLC).*	
	Routing through the Switch: A per minute of use charge for LEC investments (tandem switching, signaling, trunks between tandem switches and the local switch) and miscellaneous costs based on usage of the local switch (called the RIC).*	

*For both originating and terminating a call.

Figure 6B. Long Distance Access Price Structures

Figure 6: Access: Network Configuration and Price Structures for LEC Switch Investment and for Routing Traffic through It, cont.

Who pays for it?	*How is it paid for?*	*How is the price set?*
Residential, single-line business, and multi-line business customers.	Switch Investment: Switching is included in a flat rate, in a per minute rate, or in a per call rate in the monthly bill for local telephone service.	State tariffs.
	Routing through the Switch: A monthly flat rate for access into and out of the long distance network through the LEC local switch. This "access" charge is called the SLC and recovers a portion of loop investment.	Federal tariffs.

Figure 6C. Loop Customer Price Structures

Figure 7: Trunk Side Port Connection: Network Configuration and Price Structures for LEC Switch Investment and for Routing Traffic through It

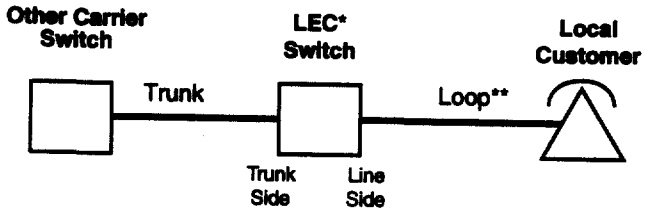

*Either an ILEC or a new market entrant.
**Also referred to as access line.

Copyright © 1996 Carol Weinhaus and the Telecommunications Industries Analysis Project Work Group, Boston, Massachusetts.

Figure 7A. Trunk Side Port Network Configuration

Who pays for it?	*How is it paid for?*	*How is the price set?*
Other Carrier: CAP/ALT, other LEC, wireless company, and cable TV company.	Switch Investment: Monthly flat rate per port for a trunk side port.	Federal and/or state tariffs or contracts.
	Switch Investment: Per minute of use charge for switching to terminate a local call. For a wireless company, this charge may be discounted below the standard rate for access.	One or more of the following methods: 1. Fee based on a negotiated contract. 2. State tariffs. 3. Bill and keep. 4. In some cases, the tariffed rates include subsidies.

Figure 7B. Trunk Side Port Price Structures

The wireless companies pay the LEC for terminating calls from mobile customers. However, the LECs generally do not pay the wireless companies for terminating calls made by wireline customers (traditional landline telephone company customers).[44] Cellular carriers and LECs were allowed to establish interconnection arrangements through negotiations.[45] The LECs were also required to provide nondiscriminatory treatment and other interconnection related requirements to cellular companies. Unlike traditional wireline telephone customers, cellular customers pay not only for the calls they make (originate) but also for the calls they receive (terminate).

The requirements for treatment of cellular companies were subsequently extended to all ***Commercial Mobile Radio Service (CMRS)*** carriers.[46] They apply to all types of interconnection arrangements including, but not limited to Type I, Type IIA, and Type IIB.[47] (For a description of these types of wireless connections, see **Section IX, Appendix D, Description of Types of Wireless Connection with a LEC Network.**)

CAPs/ALTs are generally wireline carriers and want interconnection facilities and arrangements that provide the same service and functionality as existing CMRS to LEC arrangments. However, the guidelines for interconnection arrangements between CAPs/ALTs and LECs are not yet clearly estabilshed. The "bill and keep" issue arose in the context of LEC to CMRS connections. Here also, the guidelines for competition are not clearly established.[48]

Collocation Price Structures

The diagram in **Figure 8A** shows the configuration for collocation arrangements; the Other Carrier provides the trunk and pays for a location in the LEC's central office or wire center. This collocation configuration is included because it is one way to interconnect to the switch even though it does not pay for any of the switch investment. The *Telecommunications Act of 1996* requires that ILECs:

> provide, on rates, terms, and conditions that are just, reasonable, and nondiscriminatory, for *physical collocation* of equipment necessary for interconnection or access to unbundled network elements at the premises of the local exchange carrier, except that the carrier may provide for *virtual collocation* if the local exchange carrier demonstrates to the State commission that physical collocation is not practical for technical reasons or because of space limitations [emphasis added] — *Telecommunications Act of 1996*, Sec. 251(c)(6), Interconnection, Additional Obligations of Incumbent Local Exchange Carriers

Figure 8: Collocation: Network Configuration and Price Structures for LEC Switch Investment and for Routing Traffic through It

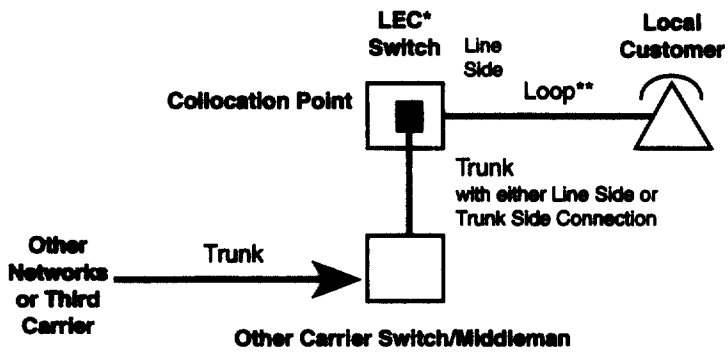

*Either an ILEC or a new market entrant.
**Also referred to as access line.

Copyright © 1996 Carol Weinhaus and the Telecommunications Industries Analysis Project Work Group, Boston, Massachusetts.

Figure 8A. Collocation: Trunk Side Port or Line Side Port Network Configuration

Who pays for it?	*How is it paid for?*	*How is the price set?*
Other Carrier: CAP/ALT, other LEC, wireless company, and cable TV company.	Routing through the Switch: Monthly flat rate for renting space in the LEC's central office building or for a connection into this building.	Rental fee that is based either on a negotiated contract or on federal and/or state tariffs.
	Switch Investment: Monthly flat rate per line side port.	Federal and/or state tariffs or contracts.
	Switch Investment: Per minute of use charge for switching to terminate a local call.	One or more of the following methods: 1. Fee based on a negotiated contract. 2. State tariffs. 3. Bill and keep. 4. In some cases the tariffed rates include subsidies.

Figure 8B. Other Carrier (CAP/ALT, Other LEC, Wireless Company, or Cable TV company) Pays LEC Directly for Collocation

Figure 8: Collocation: Network Configuration and Price Structures for LEC Switch Investment and for Routing Traffic through It, cont.

Who pays for it?	*How is it paid for?*	*How is the price set?*
Other Carrier: IXC	Routing through the Switch: Monthly flat rate for renting space in the LEC's central office building or for a connection into this building.	Rental fee that is based either on a negotiated contract or on federal and/or state tariffs.
	Switch Investment: Monthly flat rate per line side port.	Federal and/or state tariffs.
	Switch Investment: A per minute of use charge for the local switch.*	Federal and/or state tariffs. The usage charges may include subsidies for companies in high-cost areas, and for keeping local service rates low.
	Routing through the Switch: A per minute of use charge for a portion of loop investment based on usage of the local switch (called the CCLC).*	
	Routing through the Switch: A per minute of use charge for LEC investments (tandem switching, signaling, trunks between tandem switches and the local switch) and miscellaneous costs based on usage of the local switch (called the RIC).*	

*For both originating and terminating a call.

Figure 8C. IXC Pays LEC Directly for Collocation

Figure 8: Collocation: Network Configuration and Price Structures for LEC Switch Investment and for Routing Traffic through It, cont.

Who pays for it?	*How is it paid for?*	*How is the price set?*
A Third Carrier pays the Other Carrier/ Middleman. Third Carrier may be an IXC, wireless company, other LEC, cable TV company, or large business customer.	Routing through the Switch (but Not Paid to the LEC): Fee for connecting to the Other Carrier's central office.	One of the following methods: 1. Based on negotiated contracts. 2. Federal and/or state tariffs.

A Third Carrier (wireless company, other LEC, cable TV company, or large business customer) pays the LEC directly.	Switch Investment: Per minute of use charge for switching to terminate a local call.	One or more of the following methods: 1. Fee based on a negotiated contract. 2. State tariffs. 3. Bill and keep. 4. In some cases the tariffed rates include subsidies.
The Third Carrier (IXC) pays the LEC directly.	Switch Investment: A per minute of use charge for the local switch.*	Federal and/or state tariffs. The usage charges include subsidies for companies in high-cost areas, and for keeping local service rates low.
	Routing through the Switch: A per minute of use charge for a portion of loop investment based on usage of the local switch (called the CCLC).*	
	Routing through the Switch: A per minute of use charge for LEC investments (tandem switching, signaling, trunks between tandem switches and the local switch) and miscellaneous costs based on usage of the local switch (called the RIC).*	

*For both originating and terminating a call.

Figure 8D. Third Carrier Pays LEC Directly and Also Pays Middleman for Collocation