density range. The Convergence Module produces investments in the following categories:

- Distribution (aerial and underground copper cable and associated structure)
- Feeder (aerial and underground fiber and copper feeder cable and associated structure)
- Switching (end office and local tandem switching investment)
- Wire center (end office wire center and local tandem wire center investment)
- Operator services (operator tandem switching, tandem wire center, trunks and operator positions)
- Transport (common and dedicated)
- STPs
- SCPs
- Signaling links
- Drop investment per line
- NID investment per line
- Terminal and splice investment

In addition, the Convergence Module output sheet summarizes line and trunk counts, tandem routing fractions, DEM units and utilization ratios. Line counts include residential, business, special access and public access lines.

b) ARMIS Data

The ARMIS data used in the Expense Module includes investment and operating expenses and revenues for a given carrier and state. This data is used to derive the total investments, expenses and revenues for each BNF. The investment, expense and revenue categories are listed below and described in detail in the Key Algorithms section.

(1) plant specific operations

- general support - land, buildings, vehicles, furniture, office equipment and other equipment
- wire center switching - analog and digital electronic switching, operator systems
- wire center transmission - circuit equipment, transmission
- information origination and termination - station apparatus, customer premises wiring, public telephone, terminal equipment

- cable and wire facilities - poles, cable, conduit

(2) **plant non-specific operations**

- provisioning
- power
- plant operations
- network administration
- testing
- engineering
- access expenses

In addition, ARMIS data includes local network service revenues by the following categories:

- Access Revenue - end user, switched and special access revenue
- Basic Service Revenue
- Long Distance Network Revenue

c) Capital Structure Parameters

The Expense Module requires carrier-specific capital structure parameters to calculate the carrier's Weighted Average Cost of Capital ("WACC"), which is a discount factor used to calculate capitalized costs of BNFs. Parameters required are debt-equity ratio, cost of debt and cost of equity.

d) Factors Built Into the Expense Module

The module uses a number of ratios and factors to calculate monthly per-line loop and annual switching costs. These factors are explained in detail in the Key Algorithms section.

COST OF CAPITAL INPUTS

Debt %		0.6182	
Cost of Debt		0.0746	0.046
Equity %		0.3818	
Cost of Equity		0.1125	0.043
Overall Cost of Capital			**8.91%**
Weighted Equity Percent		0.4822	
variable support factor		0.010	
other taxes factor		0.050	
operating state and local income tax factor		0.010	*calculated input*
uncollectibles factor		0.021	
billing/bill inquiry per line per month	$	1.22	
directory listing per line per month	$	0.15	
service order processing fraction of 6623		0.346	
alternative CO switching factor		0.027	
EO traffic-sensitive fraction		0.700	
per-line monthly LNP cost	$	0.25	
tandem-routed toll fraction		0.200	
tandem-routed local fraction		0.400	*from Convergence Module*
interoffice local fraction		0.650	
State	Massachusetts		
Company	NEW ENGLAND TEL CO - MA		
DS-0/DS-1 crossover		9.00	
DS-1/DS-3 crossover		9.00	
Distribution structure fraction assigned to telephone		1.00	
Feeder structure fraction assigned to telephone		1.00	
Local call completion fraction		0.70	
Total local calls attempted		11,203,803,000	
Total intraLATA calls completed		1,274,618,000	
Total interLATA calls completed			
intrastate		273,655,000	
interstate		1,505,021,000	
Total local calls completed		7,842,662,100	
Total completed local interoffice calls		2,204,785,738	

model specific data

ECONOMIC LIFE & TAX INPUTS

tax rate	0.40
economic life	years
loop distribution	24
loop feeder	28
loop concentrator	17
end office switching	20
wire center	
tandem switching	15
operator investment	13
transport facilities	17
STP	14
SCP	14
links	14
public telephones	9
general support	18

3. Explanation of Key Algorithms

The Expense Module is driven primarily by the calculated annual capital cost and operating expenses of the carrier(s) under study. All costs are summarized for each of the eleven BNFs. The algorithms used to determine these amounts are described below.

a) Capital Costs

The model calculates annual capital cost for each BNF based on the net plant investment, the expected depreciable life, the return on the net asset and the grossed-up income tax on the return of the net asset. The model assumes straight-line depreciation and assumes that cash flows are in arrears (i.e. return from assets, tax gross-ups and depreciation are applied at the end of each year).

The discount rate ("WACC") used in capitalizing annual capital costs is based on the capital structure and the cost of debt and equity for the given entity.

The model calculates the investments required for each BNF. The model then determines the appropriate life of these investments based on the economic life spans for each of the basic network elements.

Once the element's life span has been determined, annual depreciation amounts are calculated (total investment ÷ depreciable life in years) and summarized over the discounting period to determine the annual accumulated depreciation (annual depreciation x equipment life service years). The annual accumulated depreciation is then subtracted from the total investment to determine the Annual Net Asset Amounts.

The return amount from the assets are then calculated by multiplying the Annual Net Asset by the return component of the cost of capital ("WACC"). Then the annual tax gross-up is determined by applying the nominal tax rate to the return amount [((nominal tax rate of 40%) * percent equity * return amount)/(1- nominal tax rate)].

The Total Annual Return is the sum of the annual accumulated depreciation, return on assets and tax gross-up amounts. The Total Annual Return is then discounted over the expected life period to determine the Net Present Value ("NPV") of the Annual Returns.

The last step in the algorithm is to calculate the Levelized Capital Cost and spread this cost over the different density ranges based on the proportion of the total investment associated with that particular density range. This done by dividing the NPV by the Present Value Factor ("PVF"). The PVF equals the sum of the discount factors for each of the years of the equipment's depreciable life. Because the depreciable life varies by network equipment category, it may easily be changed by the user.

The capital cost as a percent of the investment is computed by dividing the Levelized Capital Cost by the total investment.

b) Operating Expenses - General

Operating expenses are derived based on historic expense factors calculated from balance sheet and expense account information reported in each carrier's ARMIS report. These expense factors are applied to the investments developed by the Hatfield Model to arrive at associated operating expense amounts.

For expenses driven by their associated capital investments, these capital investments are used as the basis for expense factor calculations. Other expenses, such as network operations, vary directly with the number of lines provisioned rather than with capital investment. Thus, expense for these elements are driven by the number of access lines supported. Uncollectables, sales and marketing factors are calculated as percentages of revenues.

The Model includes two types of operating expenses: network-related and non-network-related. The Expense Module relies on historical data from ARMIS reports filed by the company under study to develop factors that can be applied to the investment outputs of the model to estimate network-related and non-network-related operating expenses in the Hatfield Model.

c) Network-Related Expenses and Expense Factors

The Expense Module assigns network-related expenses to each of eleven Basic Network Functions ("BNFs") plus public telephone terminal equipment. The module also assigns the cost of capital, expenses, total investment and attributable support expense to each BNF.

These operating expenses are added to the annual capital cost derived from the NPV to determine the total Expense Summary for each BNF. Each network-related expense is described below:

Network Support -- This category includes the expenses associated with motor vehicles, aircraft, special purpose vehicles, garage and other work equipment.

Central Office Switching -- This includes end office and tandem switching as well as equipment expenses.

Central Office Transmission -- This includes circuit equipment expenses applied to transport investment.

Cable and Wire -- This category includes expenses associated with poles, aerial cable, underground/buried cable and conduit systems. This expense varies directly with capital investment.

Network Operations -- The Network Operations category includes power, provisioning, engineering and network administration expenses.

d) Non-Network-Related Operating Expenses and Expense Factors

The Expense Module assigns non-network related expenses to each density range based on its proportion to total expenses in each category. Each of these expenses is described below:

Variable support -- Historical variable support expenses for LECs are substantially higher than those of similar service industries operating in more competitive environments. Based on studies of these variable support expenses in competitive industries such as the interexchange industry, the model applies a conservative ten percent (10%) variable support factor. Furthermore, it was verified that the support expenses captured by this factor are genuinely variable with operational scale. A regression analysis

was undertaken utilizing 1995 ARMIS 43-02 Holding Company data. This analysis regressed Corporate Operations expense (the dependent variable) as a function of revenues (a surrogate for total costs) less Corporate Operations expense (the independent variable). This analysis demonstrated that fixed support expenses were not statistically significantly different from zero; and that a fixed percentage amount for variable support expense was appropriate

General Support Equipment -- The Investment Module calculates investments for furniture, office equipment and general purpose computers. The Model uses actual 1994 company investments to determine the ratio of investments in the above categories to total investment. The ratio is then multiplied by the total local service investment estimated by the Model and treats the result as an additional investment needed to provide local service The recurring costs of these items are then calculated in the same way as recurring costs for investment categories estimated directly by the investment module of the Model.

e) Revenues

The only clearly used revenue figure is that for calculating the uncollectables factor. This factor is a ratio of uncollectable expense to adjusted net revenue.

4. Outputs of the Expense Module

Results of the Expense Module are displayed in a series of reports which depict detailed investments and expenses for each BNF for each density range, summarized investments and expenses for all BNFs, unit costs by BNF and total annual and monthly network costs. These are presented in Section IV, below.

Basic Network Function (BNF) outputs

The Hatfield Model produces cost estimates for eleven Basic Network Functions ("BNFs"), plus public telephone terminal equipment. These BNFs represent an unbundling of the local exchange network into discrete functions, which can be used singly or in combination to furnish services. The BNFs are described below and their inter-relationships are illustrated in Figure 7.

1. *Loop Distribution* -- The individual communications channel to the customer premises originating from the DLC remote terminal or SAI and terminating at the first point of termination at the customer's premises. In the Hatfield Model, this BNF also includes the investments in NID, drop and terminal/splice.

2. *Loop Concentrator/Multiplexer* -- The DLC remote terminal at which individual subscriber traffic is multiplexed/de-multiplexed and connected to loop distribution for

termination at the customer's premise. The Hatfield Model DLC equipment investment in this BNF.

3. *Loop Feeder* -- The facilities on which subscriber traffic is carried from the line side of the wire center switch to the Loop Concentration facility. The BNF includes copper feeder and fiber feeder cable, plus associated structure investments (poles, conduits, etc.)

4. *End Office Switching* -- The facility which provides the functionality required to connect appropriate lines or trunks to and from a desired communications path at the first point of switching. This functionality include such things as testing, translation and routing. As modeled in the Hatfield Model, this BNF includes the end office switching machine investments and associated wire center costs, including distributing frames, power and land and building investments.

5. *Operator Systems* -- The systems that provide for the processing and recording of special toll calls, public telephone toll calls and other types of calls requiring operator assistance, as well as Directory Assistance. The investments identified in the Hatfield Model for the Operator Systems BNF include the operator positions (e.g., personal computers), operator tandem investments (including required subscriber databases), wire center and operator trunks.

6. *Dedicated Transport* -- The full period, bandwidth specific interoffice transmission path between LEC wire centers or between LEC wire centers and an IXC Point of Presence ("POP"). It provides the ability to send individual and/or multiplexed switched and special services traffic between wire centers. Interoffice transport investments that provide dedicated transport are assigned to this BNF.

7. *Common Transport* -- A switched trunk between two switching systems on which traffic is commingled to include traffic to and from multiple IXCs, as well as LEC traffic. These trunks may originate at an end office and terminate at a tandem switch, or at another end office. Interoffice transport investments that provide common transport are assigned to this BNF.

8. *Tandem Switching* -- The facility that provides the function of connecting trunks to trunks for the purpose of completing inter-switch calls. Similar types of investments as are included in the End Office Switching BNF are also reflected in the Tandem Switching BNF.

9. *Signaling Links* -- Transmission facilities in a signaling network which carry all out-of-band signaling traffic between the switches and STPs, between STPs and between STPs and SCPs. Signaling link investment is developed by the Hatfield Model and assigned to this BNF.

10. *Signal Transfer Point ("STP")* -- This facility provides the function of routing TCAP and ISUP messages between network nodes (end offices, tandems and SCPs). The Model estimates STP investment and assigns it to this BNF.

11. *Service Control Point ("SCP")* -- The node in the signaling network to which requests for service handling information (e.g., translations for local number portability), are directed and processed. The SCP contains service logic and customer specific information required to process individual requests. Estimated SCP investment is assigned to this BNF

Figure 8 Local Exchange Basic Network Functions

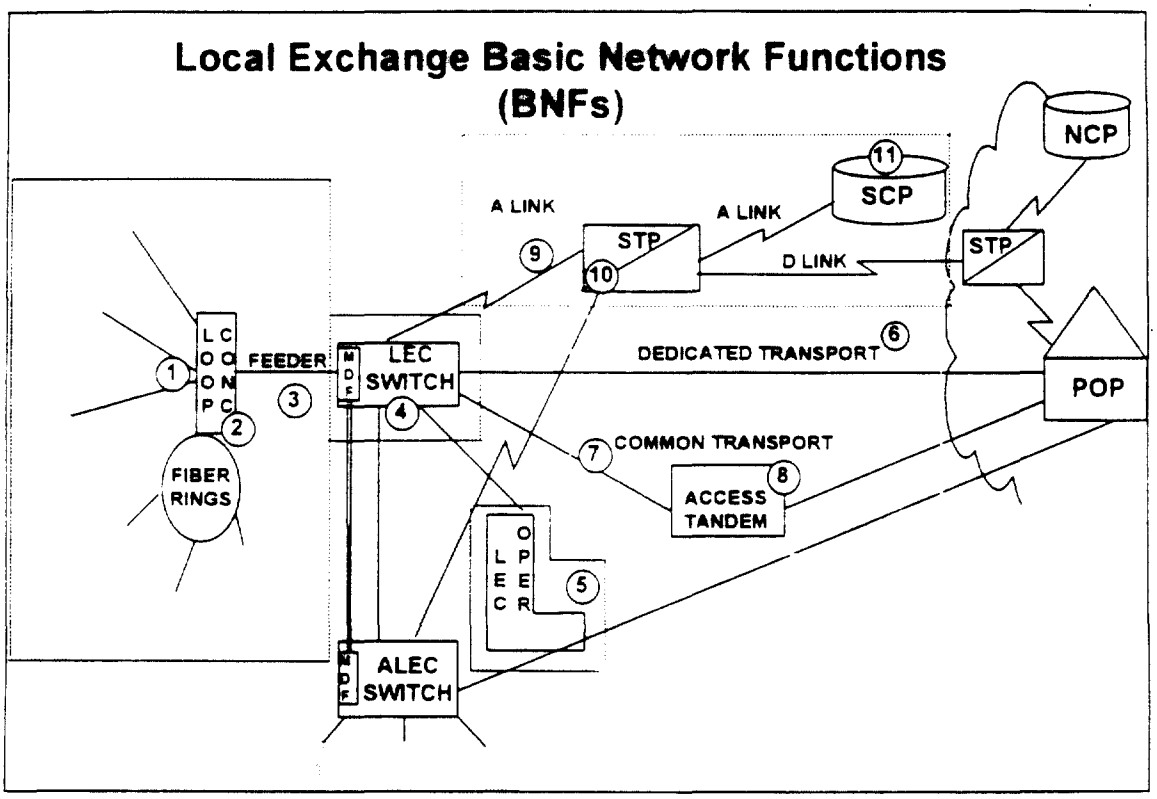

IV. ILLUSTRATIVE MODEL RESULTS

A. OVERVIEW

This section displays illustrative outputs of the HM. The main outputs exhibited are the TSLRICs of the eleven BNFs, the unit volumes of these BNFs and the monthly TSLRIC per unit of these BNFs. These outputs are further disaggregated across density zones for the loop BNFs.

The unit TSLRIC of the BNFs are then processed to develop an estimate of the unit TSLRIC of the collection of these BNFs that comprise switched local service and carrier access service

There are several reasons why a TSLRIC for switched local service plus carrier access is not the simple sum of the complete collection of BNFs. This is due largely to the fact that the LEC's network TSLRICs also include the costs of providing narrowband special access loops and the interoffice transport associated with these dedicated loops. Thus, while all of the local switching TSLRIC, all of the common transport and tandem switching TSLRICs and all of the signaling and operator systems TSLRICs are properly attributable to switched service; only a portion of the loop and dedicated transport TSLRICs are so attributable.

Outputs from the Line Multiplier Module and the Wire Center Module are used to determine the portions of loop costs and dedicated transport costs that are attributable to nonswitched local services. The remaining costs that are associated with switched service TSLRIC are then displayed

B. ILLUSTRATIVE OUTPUT

Table 23 displays illustrative results from the HM for Pacific Bell-California.

Table 23 Unit Cost by Network Element -- Pacfic Bell - California

Loop Elements	0 - 5 hh/mi2	5 - 200 hh/mi	200 -650 hh/mi	650 - 850 hh/mi2	850 - 2550 hh/mi2	> 2550 hh/mi2	Totals
Loop Distribution							
Annual Cost	$42,069,613	$170,326,755	$117,488,134	$41,617,759	$365,365,318	$545,637,407	$1,282,504,986
Units	109,113	1,288,296	1,451,816	584,063	5,367,413	8,634,088	17,434,788
Unit Cost/month	$32.13	$11.02	$6.74	$5.94	$5.67	$5.27	$6.13
Loop Concentration							
Annual Cost	$11,970,421	$63,182,353	$54,420,087	$18,399,339	$120,085,198	$103,851,184	$371,908,583
Units	109,113	1,288,296	1,451,816	584,063	5,367,413	8,634,088	17,434,788
Unit Cost/month	$9.14	$4.09	$3.12	$2.63	$1.86	$1.00	$1.78
Loop Feeder							
Annual Cost	$2,085,245	$5,030,115	$5,331,057	$2,615,247	$47,277,814	$94,858,571	$157,198,050
Units	109,113	1,288,296	1,451,816	584,063	5,367,413	8,634,088	17,434,788
Unit Cost/month	$1.59	$0.33	$0.31	$0.37	$0.73	$0.92	$0.75
Total Loop							
Annual Cost	$56,125,280	$238,539,223	$177,239,278	$62,632,345	$532,728,330	$744,347,163	$1,811,611,619
Units	109,113	1,288,296	1,451,816	584,063	5,367,413	8,634,088	17,434,788
Unit Cost/month	$42.86	$15.43	$10.17	$8.94	$8.27	$7.18	$8.66
Total Lines	109,113	1,288,296	1,451,816	584,063	5,367,413	8,634,088	17,434,788

Table 23 (continued) Unit Cost by Network Element -- Pacfic Bell - California

	Annual Cost	Units		Unit Cost	
End office switching	$655,911,223				
1. Port	$196,773,367	14,947,269	Switched lines	$1.10	per line/month
2. Usage	$459,137,856	238,082,755,975	Minutes	$0.00193	per minute
Signaling network	$44,560,625				
1. Links	$810,305		Link	$43.68	per link per month
2. STP	$33,216,716	178,488,411,302	TCAP+ISUP messages	$0.00019	per message
3. SCP	$10,533,603	12,052,424,400	TCAP messages	$0.00087	per message
Transport network					
1. Dedicated	$761,329,168	3,559,399	Trunks	$427.79	per DS-1 equivalent/month
Switched	$229,267,234	1,071,880	Trunks	$0.00177	per minute
Special	$532,061,934	2,487,519	Trunks	10,044	Trunk-minutes/month
2. Common	$64,108,935	55,739,855,180	Minutes	$0.00173	per minute per leg (orig or term)
3. Tandem switch	$109,328,741	30,459,521,088	Minutes	$0.00359	per minute
Operator systems	$15,296,019				
Total	$3,290,378,539				
Total cost per switched line	$14.89	per line/month			

C. DISCUSSION

Examination of these numeric results suggests that the derivation of the cost of tandem switching should be reviewed. This is because the reported unit cost of tandem switching exceeds the unit cost of end office switching. If revisions to the model are necessary to address properly this issue, this modeling will be updated.

In addition, one of the strengths of this model is its flexible ability to accept newly available data and/or modeling logic flows. As a result, as additional data become available, or new modeling demands are identified, HAI will enhance this tool.

Appendix 1

PRINCIPLES TO GUIDE STUDIES OF LOCAL EXCHANGE TOTAL SERVICE LONG-RUN INCREMENTAL COST (TSLRIC)

1. **TSLRIC measures only the long-run costs of providing the element in question.**
   Costs must be measured over a sufficiently long period of time so that any element-specific costs become variable.

2. **TSLRIC measures only the *forward-looking* costs of providing the element in question.**
   TSLRIC must measure forward-looking costs, not historic, embedded or book costs. Economic costs are forward-looking and are based on the most efficient generally available technology.

3. **TSLRIC is based on the costs that an *efficient, cost-minimizing* competitor would incur -- i.e., the costs of assets that are optimally configured, sized and operated.**
   Proper measures of TSLRIC must exclude the costs of inefficient design or operations, because those costs cannot be recovered in competitive markets and would weaken incentives for LECs to operate efficiently.

4. **TSLRIC includes only the *additional* costs of providing the particular network element(s), holding constant the supplier's output of all other items.**
   TSLRIC includes only those added costs that are attributable to production of the network element(s). Costs that are properly attributable to *other* outputs of the LEC, or costs that are fixed and shared with other network elements so that they would be incurred even if the network element(s) were not supplied, are excluded from TSLRIC.

5. **TSLRIC is based on the entire demand of *all* uses and users of a network element.**
   TSLRIC includes the economic costs of serving the total demand of all uses and users of a network element, including the demand of the supplying LEC.

6. **TSLRIC should reflect any significant geographic cost differences.**
   TSLRIC estimates should reflect any significant geographic differences in cost, to the extent that these cost differences are reliably measurable.

Definitions of the above cost terms are supplied in Appendix 2 to this document.

Appendix 2

GLOSSARY OF COST TERMS

Forward-looking costs: Costs that an efficient, prospective entrant would consider in investing in an industry, because the entry, exit and expansion decisions of such firms are based on expected costs and revenues.

Joint costs: Costs that derive from the joint production of products in fixed proportions.

Common costs: Costs which must be incurred if any of the firm's products are produced, but are unattributable to individual products on any cost-causative basis. It is a useful convention to limit the term to overhead costs.

Shared costs: Fixed costs that are incurred in the production of a specific subset, or various subgroupings, of all the products of a firm.

Stand-alone costs: Economic costs of producing a product or group of products in isolation from all other products (i.e., on a stand-alone basis).

Embedded costs: Costs of operations that are recorded on the firm's current accounting books.

Fully distributed costs ("FDC"): Cost per unit of output of a product, including directly attributable costs and an allocation of common or shared costs. The allocation of common costs among products is not based on cost causation and is inherently arbitrary.

Overheads: Costs incurred that are involved only indirectly in the production of outputs. Some overhead costs may be fixed and unattributable. Others may be vary with the firm's scale and thus be causatively attributable to the production of particular products.

Contribution: Amounts that, on a forward-looking basis, represent the difference between revenues and TSLRIC for a particular product or group of products. These amounts are intended to "contribute" to the recovery of the firm's common costs and shared-fixed costs.

Residual costs: Costs that represent the difference between the firm's current revenue requirement and the sum of the TSLRICs of all of its regulated services.

Update of the:

HATFIELD MODEL

Version 2.2
Release 1

Prepared for:

AT&T CORP.

and

MCI TELECOMMUNICATIONS CORPORATION

by

Hatfield Associates, Inc.
International Telecommunications Consultants
737 29th Street, Suite 200
Boulder, Colorado 80303

May 30, 1996

I. OVERVIEW

This document describes the several updates that Hatfield Associates, Inc. ("HAI") have performed to the "Hatfield Model Version 2.2, Release 1" ("HM"), since it was first released on May 16, 1996.[1] In addition, this document provides illustrative numeric upper bound estimates for 49 state jurisdictions of the Total Service Long Run Incremental Costs ("TSLRICs") for each of the eleven Basic Network Functions ("BNFs") used to provide narrowband local telephone services.[2] Finally, this document places these numeric results in context to other TSLRIC results produced by earlier versions of the HM, as well as in context to "TSLRIC" estimates that may have been proffered in other regulatory proceedings.[3] In particular, these other estimates may not be commensurable with the TSLRIC estimates of the eleven BNFs measured here. Often, these other estimates have attempted to cost more limited (or more expansive) definitions of the local network, or only subsets of the services (e.g., residential "universal service") that the local network is used to provide.

II. MODIFICATIONS TO THE MODEL

A. LOGIC MODIFICATIONS

As indicated in the May 16th documentation, the HM has now been updated to better reflect the scalability of tandem switch processors, the possible location of tandem switches in the same buildings as end office switches, and the use of partitioned switches to provide both end office and tandem switching functions from the same machine.[4] With these updates, the model's estimates for tandem switching TSLRICs display a more normal relationship to the cost of end office switching.[5]

---

1 As discussed in the documentation that accompanied the May 16, 1996 release, the HM is a flexible tool for estimating the economic costs of providing telephone service to business and residence users throughout the United State constructed by HAI for AT&T Corp. ("AT&T") and MCI Telecommunications Corporation ("MCI").

2 These eleven BNFs exhaust all of the network functions used to provide narrowband local service, intraLATA toll service, and carrier access service. For a fuller description of these BNFs and the services that they can be used to provide, see the May 16th documentation.

3 HAI is unaware of any other TSLRIC model of unbundled local network elements that has been submitted in CC Docket No. 96-98.

4 Many tandem switches are not stand-alone switching machines, but are partitioned end office switches.

5 Because this modification reduced the cost of tandem switching, the model's computations of optimal use levels and costs of common and dedicated transport were affected as well.

In addition to updating the tandem switching logic, HAI, has used new information to adjust the assumed length of dedicated transport legs for local, toll and access service to reflect more accurately the typical distances of these circuits. Adjustments have also been performed to capture more accurately the portion of interoffice local traffic that is direct-trunked and the portion of local traffic that is intraoffice.

B. DATA MODIFICATIONS

An update to the input data used in these model runs was to substitute 1995 ARMIS data (filed April 1, 1996) for the older 1994 ARMIS data that were used in the May 16th release. These new data generally affect the model's calculations because of the very substantial growth in customer access lines that the local exchange carriers ("LECs") reported in 1995.

III. ILLUSTRATIVE MODEL RESULTS

A. DESCRIPTION

The tables accompanying this document display numeric TSLRIC estimates for all eleven BNFs that comprise the LECs' local networks. In addition to these TSLRIC estimates, the number of units of each BNF produced is displayed along with the BNF's TSLRIC on a per-unit basis. In addition, the model computes the per unit TSLRIC for the bundle of all eleven switched network BNFs.

These numeric results are displayed for the major LEC in each of 48 state jurisdictions plus the District of Columbia. The major LEC is typically the Bell Operating Company in all states except Connecticut, in which it is Southern New England Telephone. Results are not available for Alaska or Hawaii.

The cost modeling for each LEC/Jurisdiction was performed in exactly the same fashion. The only source of difference in each LEC/Jurisdiction's TSLRIC calculations was the differences in the values of the demographic, geological, network structure and customer demand input data that were used to characterize each LEC/Jurisdiction. As discussed further below, although running the model identically across all states may limit its ability to capture any idiosyncratic characteristics of each LEC/Jurisdiction, it provides a benchmark for comparing how the uncustomized model operates on a national basis.

B. DISCUSSION

These numeric outputs from the HM accord well with other analyses of network element TSLRICs. As with any model of this type, however, there are likely to be additional useful refinements to the model or its inputs.

In particular, adjustments to the model's initial estimates for the TSLRICs of end office switching in Nebraska, signaling links in Delaware, and common transport in the District of Columbia may be appropriate. The extreme values for these variables in these jurisdictions may be the result of data errors in the location or number of certain switches, or in demand. Similarly, it is known that consistency problems may exist with certain data describing U S West's network and demands. This is due to the substantial number of exchanges that U S West has divested over the past several years. As a result, it is unclear whether the data used to characterize several U S West jurisdictions are used consistently.[6] HAI will investigate all of these issues and any others that may arise, and make adjustments, where found appropriate.

IV. CONTEXT WITH OTHER MODELING

As indicated earlier, the numeric results presented with this document provide a nationwide illustration of conservative upper bound TSLRIC values generated by the HM using publicly available demographic, geological, network and demand data -- without any customization to reflect unique characteristics of particular LEC/Jurisdictions. To the extent these data are insufficient to describe all of the rich differences between different states, more detailed, state-specific restrictions should be incorporated into the HM. Because the LECs predominantly are in control of such data, their cooperation in making these data publicly available will be extremely important to help improve modeling accuracy. Because these "national" TSLRIC estimates provide only upper bound figures for actual TSLRIC levels, the incorporation of better state/LEC-specific data should cause these estimates to converge downward towards even more accurate values.

A. WITH OTHER "HATFIELD" MODELS

As described in the May 16th documentation of the HM, Version 2.2 is based on different data from earlier versions, and may model different characteristics of local exchange networks and services. In particular, Version 2.2 uses newer 1995 data on customer demand for lines and minutes and on LEC network topologies. This version also incorporates updated methodologies for computing "structure" costs associated with the placement of outside plant. But most importantly, different versions of the HM were designed to accomplish different tasks.[7] Most typically, previous versions of the HM were designed to be used in state or federal regulatory proceedings to identify the costs of

---

6 Because the exchanges that U S West divested were generally their highest cost exchanges, lack of appropriate adjustment for these sales may bias upward the estimates of certain U S West TSLRICs. In addition, these divestitures will cause the network structure assumed by the model (e.g., location of served CBGs, switches, etc.) to change, thus changing other costs estimates.

7 See, page 1, footnote 1 of the May 16 document for an outline of the differences between the various previous versions of the HM.

"basic local service" or to size subsidies that may be required to ensure "universal" service. As such, these versions appropriately may not have modeled the costs of providing intraLATA toll service, carrier access service, or operator services. The network architectures and requirements for switching, transport and signaling for such services may differ as well. These purposes are in contrast to the purpose of Version 2.2, which is to cost the eleven unbundled local network elements. For these reasons, it may be difficult (and potentially fruitless) to compare numerical results generated by this model with those generated by previous versions.

B. WITH OTHER "TSLRIC" RESULTS

Similarly, it may be difficult to concord these results with "TSLRIC" results from other parties' models proffered in regulatory proceedings. This may be because the parties submitting such results may have different definitions for TSLRIC. In particular, the HM assumes TSLRICs that are characterized by:

- The new construction of a high quality network that incorporates copper distribution loops with copper or fiber feeder, digital switching, SS7 signaling, and all fiber interoffice transport. Other available estimates of LEC costs may assume a lower quality network, (e.g., loaded copper loops, mix of analog and digital switching, MF signaling, copper/coax/microwave interoffice transport).

- The construction of a network with the capacity to serve all narrowband switched and dedicated (residence and business) local, intraLATA toll and access service demand in the examined region. Some parties' estimates of TSLRIC may cost a network that provides only a subset of these services -- while other parties' estimates may include costs of over-built networks capable of providing video services or long distance services in addition to narrowband local services.

- The HM estimates TSLRICs consistently for the full set of eleven BNFs that comprise the LEC's complete set of unbundled switched network elements. Other models may estimate TSLRIC for only an individual BNF, or for a small group of BNFs. In addition, these other models may not define BNFs in identical fashion to HM definitions (e.g., they may fail to define a BNF to include the normal costs of installation, provisioning, maintenance, and interconnection to adjacent BNFs).[8]

In sum, unless these other estimates of TSLRIC are performed with respect to same definition of BNFs, are costed using the same methodology, and are based on the same model data inputs, the numeric results from this HM should not be expected to accord precisely with other figures existing in regulatory records.

---

[8] In addition, confusion may result when a cost estimate is termed to be a "TSLRIC" cost estimate, but in actuality includes only costs that would be included in a LRIC estimate.

V. SUMMARY

The HM develops estimates of economic costs through an engineering model designed to specify the network structure that can provide most efficiently narrowband local telephone services to all customers. As such, it conforms to TSLRIC costing rules and standards. The HM adopts realistic, but conservative, assumptions concerning the factors influencing prospective network costs to ensure that its economic cost estimates are reasonable and reflective of efficient LEC construction planning processes. Because of the conservative nature of its assumptions, the HM estimates establish a reliable upper bound to the true TSLRICs of these LEC network elements.

The Hatfield Model is flexible. It uses public information, but may accept substitute proprietary or company-specific information. Based purely on nationally available public information, it produces TSLRIC results that are very reasonable. But, the incorporation of richer, state-specific data or modeling logic will likely reveal even more economical network architectures to serve customer demand. Because of this, efforts should be made to secure this extra information. As such better data or improved logic become available, HAI will update this model to incorporate these advances.

COST OF NETWORK ELEMENTS

Alabama *BELLSOUTH TELECOMM INC - AL*

Loop elements	0 - 5 hh/mi2	5 - 200 hh/mi2	200 - 650 hh/mi2	650 - 850 hh/mi2	850 - 2550 hh/mi2	> 2550 hh/mi2	Totals
Loop Distribution							
Annual Cost	$6,885,306	$95,506,424	$39,816,125	$11,165,190	$57,738,829	$9,368,332	$220,480,205
Unit Cost/month	$30.38	$14.37	$8.73	$7.61	$7.15	$6.48	$9.83
Loop Concentration							
Annual Cost	$2,202,401	$30,179,233	$16,285,102	$3,427,283	$15,481,114	$1,604,998	$69,180,132
Unit Cost/month	$9.72	$4.54	$3.57	$2.34	$1.92	$1.11	$3.08
Loop Feeder							
Annual Cost	$431,731	$3,497,189	$1,742,798	$808,786	$7,203,054	$1,388,604	$15,072,162
Unit Cost/month	$1.90	$0.53	$0.38	$0.55	$0.89	$0.96	$0.67
Total Loop							
Annual Cost	$9,519,438	$129,182,846	$57,844,026	$15,401,259	$80,422,998	$12,361,934	$304,732,499
Unit Cost/month	$42.00	$19.44	$12.68	$10.49	$9.96	$8.55	$13.59
Total lines	18,886	553,869	380,130	122,306	673,013	120,527	1,868,730
Lines served by Digital Loop Carrier	18,886	543,166	266,242	58,201	261,133	26,673	1,194,302

	Annual Cost	Units		Unit Cost	
End office switching	$87,893,709				
1. Port	$26,308,113	1,696,824	Switched lines	$1.29	per line/month
2. Usage	$61,385,596	34,367,298,225	Minutes	$0.0018	per minute
Signaling network elements	$10,832,370				
1. Links	$69,944	302	Links	$19.30	per link/month
2. STP	$9,615,211	27,542,020,933	TCAP+ISUP messages	$0.0003	per message
3. SCP	$1,147,216	1,780,545,000	TCAP messages	$0.0006	per message
Transport network elements					
1. Dedicated	$62,544,388	308,992	Trunks	$16.87	per DS-0 equivalent/month
Switched	$27,746,183	137,086	Trunks	$0.0017	per minute
Special	$34,796,206	171,906	Trunks		
2. Common	$2,787,144	1,883,680,818	Minutes	$0.0021	per minute per leg (orig or term)
3. Tandem switch	$2,173,347	1,560,949,069	Minutes	$0.0014	per minute
Operator systems	$3,781,846				
Total	$446,861,325				

Total cost of switched network elements $20.22 per line/month

COST OF NETWORK ELEMENTS

Arizona *MOUNTAIN BELL - AZ*

Loop elements	0 - 5 hh/mi2	5 - 200 hh/mi2	200 - 650 hh/mi2	650 - 850 hh/mi2	850 - 2550 hh/mi2	> 2550 hh/mi2	Totals
Loop Distribution							
Annual Cost	$20,796,030	$28,950,782	$18,575,076	$7,261,481	$78,194,557	$39,567,270	$193,345,196
Unit Cost/month	$35.09	$11.49	$6.40	$5.45	$5.02	$4.49	$6.10
Loop Concentration							
Annual Cost	$5,163,980	$10,253,370	$8,937,979	$3,575,936	$37,100,795	$19,034,928	$84,066,988
Unit Cost/month	$8.71	$4.07	$3.08	$2.69	$2.38	$2.16	$2.65
Loop Feeder							
Annual Cost	$1,570,112	$1,139,553	$1,111,610	$641,000	$9,896,588	$6,091,994	$20,450,857
Unit Cost/month	$2.65	$0.45	$0.38	$0.48	$0.64	$0.69	$0.64
Total Loop							
Annual Cost	$27,530,102	$40,343,705	$28,624,666	$11,478,416	$125,191,940	$64,694,192	$297,863,021
Unit Cost/month	$46.45	$16.01	$9.87	$8.62	$8.04	$7.35	$9.39
Total lines	49,392	210,047	241,769	110,940	1,297,513	733,790	2,643,452
Lines served by Digital Loop Carrier	49,392	201,776	168,383	66,910	694,433	358,453	1,539,346

	Annual Cost	Units		Unit Cost	
End office switching	$132,895,271				
1. Port	$39,868,581	2,233,505	Switched lines	$1.49	per line/month
2. Usage	$93,026,689	35,584,873,424	Minutes	$0.0026	per minute
Signaling network elements	$8,198,940				
1. Links	$72,392	332	Links	$18.17	per link/month
2. STP	$6,653,505	26,436,016,685	TCAP+ISUP messages	$0.0003	per message
3. SCP	$1,473,043	1,922,438,200	TCAP messages	$0.0008	per message
Transport network elements					
1. Dedicated	$85,723,654	566,856	Trunks	$12.60	per DS-0 equivalent/month
Switched	$23,728,800	156,999	Trunks	$0.0013	per minute
Special	$61,994,854	409,947	Trunks		
2. Common	$3,997,177	2,534,149,415	Minutes	$0.0016	per minute per leg (orig or term)
3. Tandem switch	$2,538,903	2,271,275,207	Minutes	$0.0011	per minute
Operator systems	$4,200,610				
Total	$521,520,307				

Total cost of switched network elements $15.94 per line/month

COST OF NETWORK ELEMENTS

Arkansas *SOUTHWESTERN BELL - AR*

Loop elements	0 - 5 hh/mi2	5 - 200 hh/mi2	200 - 650 hh/mi2	650 - 850 hh/mi2	850 - 2550 hh/mi2	> 2550 hh/mi2	Totals
Loop Distribution							
Annual Cost	$12,268,011	$65,341,943	$22,165,737	$8,560,933	$38,089,994	$3,258,052	$149,704,670
Unit Cost/month	$30.51	$16.57	$11.13	$9.93	$9.25	$8.48	$12.79
Loop Concentration							
Annual Cost	$3,595,390	$15,961,410	$5,259,626	$1,493,861	$5,495,548	$337,388	$32,143,223
Unit Cost/month	$8.93	$4.05	$2.64	$1.73	$1.33	$0.88	$2.75
Loop Feeder							
Annual Cost	$540,357	$1,777,721	$1,035,756	$464,451	$3,241,805	$338,231	$7,398,321
Unit Cost/month	$1.34	$0.45	$0.52	$0.54	$0.79	$0.88	$0.63
Total Loop							
Annual Cost	$16,423,758	$83,081,073	$28,461,119	$10,519,245	$46,827,346	$3,933,671	$189,246,214
Unit Cost/month	$40.78	$21.07	$14.29	$12.20	$11.37	$10.24	$16.17
Total lines	33,561	328,603	166,009	71,849	343,292	32,013	975,326
Lines served by Digital Loop Carrier	33,561	317,162	102,255	28,967	106,755	6,298	595,017

	Annual Cost	Units		Unit Cost	
End office switching	$47,755,041				
1. Port	$14,326,512	855,950	Switched lines	$1.39	per line/month
2. Usage	$33,428,529	14,368,996,549	Minutes	$0.0023	per minute
Signaling network elements	$9,663,005				
1. Links	$60,706	272	Links	$18.60	per link/month
2. STP	$9,079,493	10,503,438,903	TCAP+ISUP messages	$0.0009	per message
3. SCP	$522,806	753,933,400	TCAP messages	$0.0007	per message
Transport network elements					
1. Dedicated	$27,739,665	181,272	Trunks	$12.75	per DS-0 equivalent/month
Switched	$9,471,761	61,896	Trunks	$0.0013	per minute
Special	$18,267,924	119,377	Trunks		
2. Common	$2,579,484	1,132,334,818	Minutes	$0.0023	per minute per leg (orig or term)
3. Tandem switch	$2,370,353	936,895,577	Minutes	$0.0025	per minute
Operator systems	$2,480,178				
Total	$276,039,520				

Total cost of switched network elements $23.41 per line/month

COST OF NETWORK ELEMENTS

California *PACIFIC BELL - CA*

Loop elements	0 - 5 hh/mi2	5 - 200 hh/mi2	200 - 650 hh/mi2	650 - 850 hh/mi2	850 - 2550 hh/mi2	> 2550 hh/mi2	Totals
Loop Distribution							
Annual Cost	$33,785,614	$130,590,774	$102,881,531	$41,801,191	$391,287,294	$595,829,294	$1,296,175,698
Unit Cost/month	$46.24	$13.00	$7.00	$5.97	$5.55	$5.04	$5.86
Loop Concentration							
Annual Cost	$6,799,099	$41,605,915	$45,559,654	$18,093,008	$128,671,487	$116,349,379	$357,078,542
Unit Cost/month	$9.31	$4.14	$3.10	$2.58	$1.82	$0.98	$1.61
Loop Feeder							
Annual Cost	$2,181,163	$5,131,312	$5,168,758	$2,743,387	$52,013,078	$107,196,085	$174,433,783
Unit Cost/month	$2.99	$0.51	$0.35	$0.39	$0.74	$0.91	$0.79
Total Loop							
Annual Cost	$42,765,877	$177,328,001	$153,609,943	$62,637,586	$571,971,858	$819,374,758	$1,827,688,023
Unit Cost/month	$58.53	$17.65	$10.45	$8.94	$8.11	$6.93	$8.26
Total lines	60,890	837,189	1,225,277	583,576	5,877,073	9,854,553	18,438,558
Lines served by Digital Loop Carrier	60,848	802,911	893,294	353,755	2,467,588	2,194,934	6,773,330

	Annual Cost	Units		Unit Cost	
End office switching	$707,674,707				
1. Port	$212,302,412	15,479,277	Switched lines	$1.14	per line/month
2. Usage	$495,372,295	230,141,339,661	Minutes	$0.0022	per minute
Signaling network elements	$47,349,686				
1. Links	$328,809	1,608	Links	$16.94	per link/month
2. STP	$35,778,983	184,177,295,101	TCAP+ISUP messages	$0.0002	per message
3. SCP	$11,243,875	12,460,864,000	TCAP messages	$0.0009	per message
Transport network elements					
1. Dedicated	$590,992,983	3,944,968	Trunks	$12.48	per DS-0 equivalent/month
Switched	$147,667,331	985,707	Trunks	$0.0012	per minute
Special	$443,325,652	2,959,261	Trunks		
2. Common	$35,223,697	21,345,730,186	Minutes	$0.0017	per minute per leg (orig or term)
3. Tandem switch	$12,574,383	16,491,963,305	Minutes	$0.0008	per minute
Operator systems	$21,384,178				
Total	$3,151,620,241				

Total cost of switched network elements $13.49 per line/month

COST OF NETWORK ELEMENTS

Colorado *MOUNTAIN BELL - CO*

Loop elements	0 - 5 hh/mi2	5 - 200 hh/mi2	200 - 650 hh/mi2	650 - 850 hh/mi2	850 - 2550 hh/mi2	> 2550 hh/mi2	Totals
Loop Distribution							
Annual Cost	$43,209,977	$44,498,696	$20,007,655	$8,485,663	$75,974,911	$43,645,785	$235,822,688
Unit Cost/month	$51.50	$11.99	$6.31	$5.54	$5.10	$4.62	$7.02
Loop Concentration							
Annual Cost	$8,430,569	$16,082,855	$9,659,677	$4,014,529	$35,396,190	$15,559,496	$89,143,317
Unit Cost/month	$10.05	$4.33	$3.04	$2.62	$2.38	$1.65	$2.65
Loop Feeder							
Annual Cost	$2,813,005	$1,830,664	$1,575,024	$729,565	$11,357,070	$7,488,840	$25,794,168
Unit Cost/month	$3.35	$0.49	$0.50	$0.48	$0.76	$0.79	$0.77
Total Loop							
Annual Cost	$54,453,551	$62,412,216	$31,242,356	$13,229,757	$122,728,172	$66,694,121	$350,760,172
Unit Cost/month	$64.90	$16.82	$9.85	$8.64	$8.24	$7.06	$10.44
Total lines	69,925	309,261	264,420	127,575	1,240,743	786,691	2,798,634
Lines served by Digital Loop Carrier	69,925	287,470	165,962	69,510	603,837	262,665	1,459,369

	Annual Cost	Units		Unit Cost	
End office switching	$145,656,760				
1. Port	$43,697,028	2,215,919	Switched lines	$1.64	per line/month
2. Usage	$101,959,732	37,397,367,626	Minutes	$0.0027	per minute
Signaling network elements	$9,585,359				
1. Links	$115,105	450	Links	$21.32	per link/month
2. STP	$7,686,821	25,203,964,676	TCAP+ISUP messages	$0.0003	per message
3. SCP	$1,763,433	1,853,713,800	TCAP messages	$0.0010	per message
Transport network elements					
1. Dedicated	$116,487,637	747,953	Trunks	$12.98	per DS-0 equivalent/month
Switched	$25,734,483	165,238	Trunks	$0.0013	per minute
Special	$90,753,154	582,715	Trunks		
2. Common	$7,248,289	2,766,206,015	Minutes	$0.0027	per minute per leg (orig or term)
3. Tandem switch	$3,090,534	2,447,043,723	Minutes	$0.0013	per minute
Operator systems	$5,442,895				
Total	$623,235,945				

Total cost of switched network elements $17.84 per line/month