13.4.4.3 E911 Impacts

With RTP, calls will be routed to the proper PSAP. The calling number will be forwarded to the PSAP so services that use the calling party will continue to operate. There should be no impact on call set-up time and post dial delay for 911 calls from either ported or non-ported numbers. There should be no impact on 911 call completion rates from ported or non-ported numbers.

13.4.4.4 SMS Database

All LNP portability alternative require an SMS database. With RTP, the overarching SMS database will have to interface with existing switch provisioning systems so that switches can be updated with the proper information.

13.4.4.5 SCP Database Responses

With RTP, no external database is required for call setup and therefore, no SCP response is required for call setup. A database (SCP) will be required for non-call associated activities such as determining the serving network of a given number for busy line verification or possibly, 10 digit translations required for CLASS services.

13.4.4.6 Type of Number Portability Supported

RTP can support service provider portability, location portability, as well as service portability if the service uses ISUP call set messaging. The extent that RTP can reasonably support location portability is not clear and requires further study.

13.4.4.7 Service Interactions

The following sections details how existing services will be handled in a number portability environment if RTP is employed.

13.4.4.7.1 CLASS Services

CLASS services require that non-call associated SS7 messaging is employed to ensure that services such as Auto Callback and Auto Recall will work. Presently, the messaging for these services is routed based on the first six digits (NPA-NXX) of the calling or called number. With number portability it will be necessary that all 10 digits of the calling and called number be used for routing. These 10 digit translations can either be done in Signaling Transfer Points (STPs) or in an associated database such as a Signal Control Point (SCP).

13.4.4.7.2 Operator Services Impact

RTP will not negatively impact operator services. Services such as Busy Line Verification will require a query capability t o determine which network a given number is served from. This will require an external database. In addition, LIDB

and ABS will require 10 digit translations (rather than the present 6 digit GTTs) to properly route messages.

13.4.4.7.3 End User Impacts

End user impacts are minimized with RTP. Calls to non-ported customers complete as they do today. Only calls to ported customers are handled differently than they are at present. In addition, since RTP using the LRN as a routing number is a single numbering solution, service such as Caller ID will continue to work as they do today.

13.4.4.7.4 Repair Services

In a number portability environment repair services and trouble reporting procedures will be available from all service providers. It may be necessary to access a database to determine the service provider for a given number. The database used for this could be the same as used for Operator Services.

13.4.4.8 Number Administration

Number portability is a generic LNP portability issue and RTP can work with number administration being handled by either a service provider or a third party.

13.4.4.9 Timing/Availability

The switch features required to support RTP are available by a least two switch vendors by 4Q97.

It should be noted however, that switch software is not the only gating issue for number portability. Other issues such as billing and the Service Management System (SMS) require resolution before number portability can be achieved. At this point it is unknown if the switch feature development is even in the critical path. Other deployment/implementation work items, such as ordering, provisioning, billing, maintenance, and tracking/reporting may take longer to analysis and put in place than development of a new switch feature.

13.4.4.10 SS7 Impacts

RTP will have minimal impacts on the SS7 network. Only ISUP messaging is required for call setup. IAMs between the Pivot switch and Release switches will require an additional octet (CI). Calls to ported numbers will also generate a Release + RI message and an additional IAM message with a Generic Address Parameter (GAP). All other SS7 traffic for call setup will be unaffected. CLASS and ABS/LIDB traffic will require 10 digit GTTs which will affect SS7 components (e.g., STPs).

13.4.4.11 Relative Cost

RTP is expected to be the least cost alternative for service provider number portability. No external databases are required for call setup, queries are only generated for calls to ported numbers, and the additional traffic on the SS7 network will be minimal. The switch feature cost and the effect on the real-time capacity of switches is not determined and requires further study.

13.4.4.12 Billing/Rating

The RTP architecture supports the use of a one-number approach. The availability of pertinent billing information, e.g., originating number, terminating number, connect date, connect time, elapsed time, will continue to be supported. Current rating schemes will remain functional under this architecture.

RTP will not require any new AMA structure codes or call codes. Existing structure code and call code formats will be used on all call scenarios. Besides the originating recording that normally records at the Pivot switch (when a call is made from the Pivot switch), additional recordings may record at the Pivot and Releasing switches. These access records will be FGD-like recordings with no carrier identification but with special indicator(s) to mark the messages as RTP.

On Alternate Billing Services (ABS) calls billing to a ported number, the LIDB should be updated to reflect the LEC responsible for the ported number. Additional billing infrastructures may be needed to enhance this billing identification process. (This is an event that needs to be administered using local policy decisions and is considered independent of the RTP architecture.) The information gathered through these billing identification processes [i.e., LIDB and/or local billing infrastructures should be sufficient to allow CMDS (Centralized Message Distribution System) to route messages to the correct billing center].

13.1.4.13 End User Impacts

The RTP architecture allows the continued use of 1+10D dialing for toll calls. The 1+ is the toll indicator. If the NPA-NXX of the dialed number indicates toll call, and 1+10D have not been dialed, then the normal network announcement prompting the caller to first dial 1+ is given.

The RTP architecture is transparent to callers and called parties. Non-ported customers, and ported customers, will not perceive that a call has been redirected as a result of number portability call processing.

RTP would be available to all customers within a selected service area.

Directory listing is independent of the LNP solution. Directory listings and information would depend on the individual state's mechanized listing's interface(s) to its directory unit and directory listings and information strategy.

The Repair capability is independent of the LNP solution. The RTP architecture will support the policy decision and strategy for repair calls. A referral to a customer's local carrier could be made from the service provider's 611 repair bureau. This could be accomplished by storing a contact (800) number for each

carrier to the Line Information Database (LIDB), for the numbers associated with each local carrier, for retrieval by the 611 repair bureau. Reciprocal arrangements could be established by all service providers.

No number change is required with the RTP architecture. It allows an end user to retain their existing telephone number.

13.4.4.14 Participating Carriers

RTP does not require that all carriers use this alternative. What is important for the industry is that a common network interface be developed so service providers can optimize their internal network for number portability.

13.5 Non-Geographic Numbering Proposal

13.5.1 General Description

A Database Architecture Using Non-Geographic Numbers

This section describes a nationwide approach to local number portability based on the use of Local Number Portability (LNP) databases utilizing non-geographic numbers (NGN). The subscriber is issued an NGN at initial subscription and continues to retain this NGN upon subsequent service provider or location changes. The use of NGNs permits the service provider to preserve existing network functions such as routing and billing. This will also allow the network to provide local number portability (LNP) to subscribers who desire this feature without having an impact on all subscribers. Finally, this architecture will be more cost effective to implement because it incorporates minimal impact on existing networks, structures, and operation.

The proposed architecture is designed to offer the LNP service to subscribers who desire this service without affecting the quality of service of the non-subscribers and having a minimal impact on existing networks. Since calls to LNP subscribers involve the number translation activity, these calls will experience longer call setup delay. The NGN architecture permits all other calls to be processed as they are today. As a result, non-subscribers can enjoy the same quality of service as they do today. This architecture does not require alteration to existing networks. It is an overlay network using the existing routing mechanism and billing methods. This also reduces the effort required to provision this service. Thus, it is possible to implement this method without having to burden the entire telephone user population with the cost and service impact of Local Number Portability. Only subscribers of the LNP service can then be charged for the service.

13.5.2 Architecture Description

When a user initially subscribes to the LNP service, a NGN is assigned to the subscriber. The NGN will be a non-geographic NANP number designated for LNP usage that may come from one of the INPA codes that have been assigned as non-geographic. LNP subscribers with an assigned NGN are free to obtain services from any service providers they choose while retaining their NGN. The administration of these numbers is assumed to be done on a centralized basis in a similar fashion as the existing 800 numbers. All LNP subscribers will have non-geographic portable numbers assigned to them in addition to their geographic numbers. The geographic number will then change if a subscriber changes their location or service provider.

The NGN contains no information (e.g., geographical location or service provider identity) about the subscriber except the user's identity. It serves as a logical address such as customer name. The network has to translate this logical address to a physical address to locate the subscriber for call delivery and

billing. Geographic numbers (GN) are physical addresses that contain location information.

The architecture illustrated by Figure 1 provides the number translation process required to support the LNP service. The LNP architecture requires LNP databases. The LNP database contains the NGN-to-GN mappings for LNP subscribers the service provider serves and SPID (Service Provider Identification) mappings for all other subscribers from the SMS. The LNP databases will probably be maintained by the service provider whereas the SMS database might be administered and maintained by an independent organization as is done for the 800 database.

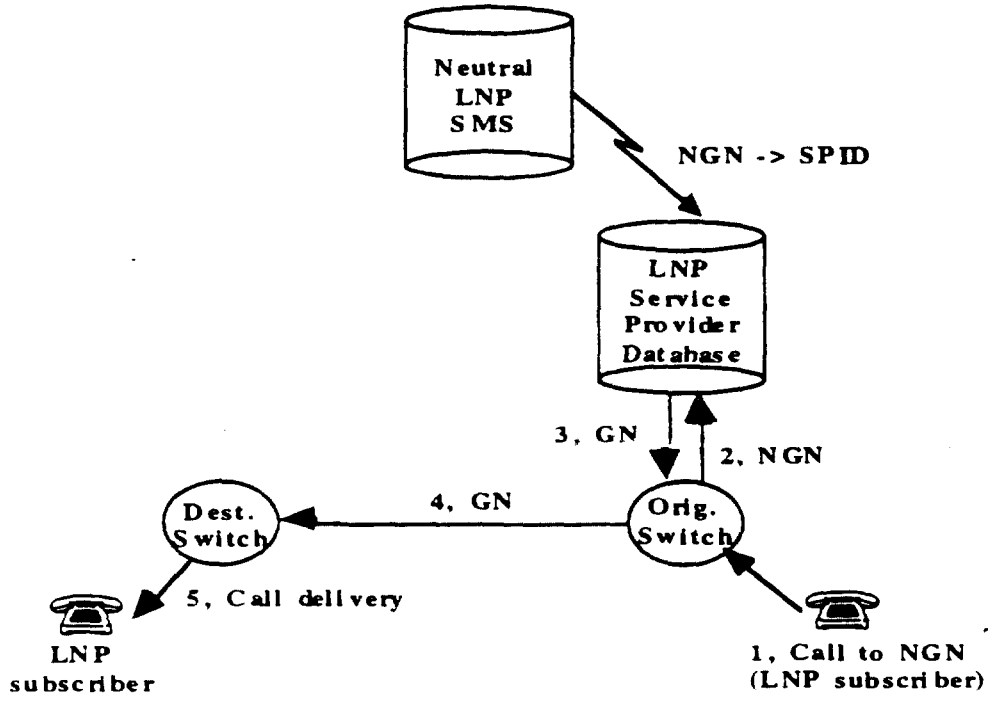

Figure A - Local Number Portability Architecture

13.5.3 Method of Operations

The following call flow illustrates the call delivery procedures of a call to an LNP subscriber (refer to Figure 1 above). The NGN approach requires minimal modifications to the existing call flow methodology used in today's network.

1. A caller dials the LNP subscriber's NGN.
2. When the originating switch detects a call initiation to an LNP subscriber, it sends a query to the LNP database. The LNP database is associated with the originating switch. The query request contains the dialed NGN.
3. The service provider LNP database translates the NGN to a GN and returns a response to the originating switch with the GN.
4. When the originating switch receives the GN from the LNP database, it routes the call based on the received GN using current call routing procedures.
5. When the destination switch receives the call, it terminates the call to the LNP subscriber using the GN.

The LNP architecture specifies that the originating switch queries the LNP database when it detects a call origination to a LNP subscriber. The switch-to-database interface can be IN (Intelligent Network) or AIN based. If between the switch and database interface, it is AIN based then Intelligent Network Application Part (INAP) may be employed for the query and response interactions. If the interface is based on existing IN implementations then simple query and response messages (e.g., similar to 800 messages) can be used.

13.5.4 Network Impacts

The adoption of the NGN approach for the provision of LNP does not have any significant impact on the existing network infrastructure. This statement is made based on the fact that once the database dip is performed, the geographic number clearly identifies the destination end user's serving end office. The ported number can be from an incumbent LEC to a new LEC, from a new LEC to an incumbent LEC, or between new LECs. The remainder of this section describes the various impacts that the NGN method will have on various network components and functions in today's network.

13.5.4.1 Switching

13.5.4.2 Originating switch

It is a known fact that all of the proposed local number portability architectures will directly impact the switching systems. The extent that changes will have to be done are primarily determined by the type of architecture used to serve LNP, and the switching systems deployed within that area.

From a high level point of view, the NGN LNP approach, using a dedicated non-geographic NPA code to trigger the query of an LNP database, would require only minor changes to the existing switching system. This should lead to the least incremental cost for switching system modifications. Only one dip needs to be performed at the origination of a call. No terminating dip is required. No intermediate (Interexcahange Carrier IC) dip is required. This greatly improves the overall Quality of Service (QOS) by reducing post dial delay.

This solution does not require new routing software and algorithms. Since the ported numbers are non-geographic and are mapped to the existing geographic NANP numbers, opening of new NXXs for ported numbers is not required. If a new service provider requires numbers to start into business, they will follow the existing guidelines to obtain CO codes as is done today in a non-ported environment. Switching equipment will need to recognize the non-geographic dialed number in a similar fashion that 800 numbers are interpreted today. This, function may be as simple as a data base entry in some switches to potentially adding new software to make this happen. In general the effort to accomodate this function is a minor task.

13.5.4.3 Tandem

The non-geographic LNP call model supports the existing telecommunications infrastructure and existing routing algorithms. For those calls to the non-ported numbers, the calls are routed as is currently done. For calls to the ported numbers, queries are performed to obtain the corresponding geographic numbers, the calls are then routed as currently done.

This call model provides seamless interconnections between end offices and tandem switches. If the end office is not LNP capable, the tandem switch can perform the database dip to obtain the corresponding geographic number and the call is routed accordingly.

13.5.4.4 Translations

LNP NGNs are translated to GNs allowing LNP calls to be routed as they are today.

13.5.4.5 Signaling

There is no need to modify existing signaling protocol to support the non-geographic number proposal.

13.5.4.6 Database Requirements

Most of the database requirements will be determined by the demand for LNP. In the NGN proposal, customer demand for LNP dictates the number of SCPs required. In contrast, the SCP requirement of the other proposals are not driven by customer demand but the number of subscribers within the LNP service boundary. The NGN database requirements are very similar to the 800 database since this is also a nationwide type of service. Most of the relevant issues regarding database requirements have been highlighted in section 7.1 of this report which are generic to all LNP proposals.

Note the NGN proposal only requires database dips for ported numbers. All calls to non-ported numbers proceed as they do today

13.5.4.7 Post Dialing Delay

The NGN approach will enable easy recognition of LNP subscribers from the number that is dialed; thereby decreasing the general call-setup delay time that would be experienced if all originated calls would require screening. Only those calls to the LNP subscribers require database dips. All other originated calls should not be affected. This is an important network consideration as a longer "call setup time" may lead to an increase in call abandonments and impact to the provisioning of new IN and AIN feature enhancements/services and other future telecommunications services.

For NGN ported calls the post-dial delay would incur additional call setup time/post dial delay in the exact same manner as today's calls to E800. The additional post dial delay for ported numbers could be covered by the 86-10 E800 requirements. These specifications could be enhanced to include LNP type calls.

For calls to non-ported numbers, no database dips are needed. Thus the call setup time/post dial delay would be the same as it exists today within the network without LNP.

13.5.4.8 Transmission Quality

The transmission quality will not be impacted due to the introduction of number portability. The transmission quality is basically determined by the type ano quality of the trunking connections between the carriers involved in the call.

13.5.4.9 Blocking

The NGN LNP solution would have no impact on calls to non-ported numbers. The blocking impact to ported number calls would be as a result of the incremental amount due to LNP processing; the networking to the SCP and the associated dip. Thus local type calls to ported numbers should comply with the blocking requirements currently associated with E800 type calls. If LNP engineering guidelines are created properly there should be very minimal impact on the blocking probabilities.

Most of the other LNP solutions require a database dip for every call, whether it is to a ported number or not. Thus, more queries to the database are needed and subsequently network blocking may be increased.

13.5.4.10 Network Reliability Impact

The NGN LNP solution is the only proposed solution that does not dilute the network reliability for non-ported numbers.

The NGN solution requires that call queries be limited to only calls made to LNP subscribers. All calls to a LNP designated subscriber, whether intra-office local, toll, or inter-LATA, whether it is to a customer who has changed providers or not, go through the extra step of launching an SS7 inquiry to the LNP portable routing database to receive routing/translation instructions. Using the NGN call model only information about ported numbers is stored in the LNP database. Thus a relatively small database is required. The overall network reliability for ported numbers may be affected since their call model is more complex. But, with redundant databases and signaling links, the network reliability impact should be minimal.

13.5.4.11 Prevents "Looping"

The ported numbers are easily recognized by a specific non-geographic NPA (e.g., 333). When ported numbers are dialed, the switch will perform a query. After the query, geographic routing numbers are returned and no additional queries are needed. This guarantees that no looping will occur.

13.5.4.12 Limits Queries on Intraoffice Calls

The NGN solution requires that call queries are limited to only calls made to LNP subscribers. All calls to an LNP designated subscriber, whether intra-office local, toll, or inter-LATA, whether it is to a customer who has changed providers or not, go through an additional step of launching an SS7 inquiry to the LNP database to receive routing/translation instructions. The ported numbers are easily recognized by their specific non-geographic area code.

Intra-office calls to Non-LNP subscribers do not require that any queries be launched to complete these calls. This greatly minimizes the number of queries and any impact that the intoduction of LNP would have on the quality of service in the network.

After the query, geographic routing numbers are used in the ISUP messages and no additional queries are required.

13.5.4.13 Avoids Redundant Queries

The NGN LNP solution requires that call queries be limited to only calls made to LNP subscribers. All originating calls to an LNP designated subscriber, whether intra-office local, toll, or inter-LATA, whether it is to a customer who has changed providers or not, go through the extra step of launching an SS7 inquiry to the LNP database to receive routing / translation instructions. Since the ported number has a unique non-geographic NPA code, it is easily recognized by the network. Also, since the database dip is always executed by the originating office or the tandem switch and a geographic routing number is obtained, and presented to the network, no subsequent database dips such as intermediate or terminating are required. This avoids any redundant queries.

13.5.4.14 E911 Impacts

Calls from non-ported numbers to 911 will continue to function as they do today. Calls from ported numbers to 911 will operate as follows: Every LNP customer is effectively assigned two network identities:

> The first is their non-geographic LNP directory number (e.g., 333-789-1234)
>
> The second is their geographic number (e.g., 214-718-1234).

When an LNP subscriber makes an E911/911 type call, the calling party number displayed at the Emergency Service equipment is the second number the geographic number indicating the customer's hierarchical location. There are no network changes foreseen that would be required in this area. The only action required is of an administrative nature, i.e., to insure that the service provider of the ported number coordinated the numbering data for the database.

13.5.4.15 SMS Database

The non-geographic LNP call model recommends the use of SCP, LNP databases. Each service provider launches queries to a specific SCP database. (This database

may be shared by more than one service provider). If the destination end user is served by the network of the originating service provider, this originating service provider database contains the called party geographic number. If the destination end user is served by another service provider, this database may contain the called party's service provider database address and launches a query to that database directly. This avoids 10-digit GTT at the STP.

The following figure shows the call flow of the NGN LNP call model. The numbers in this figure indicate the sequence of the call flow (See section 13.5.3).

Originating switch

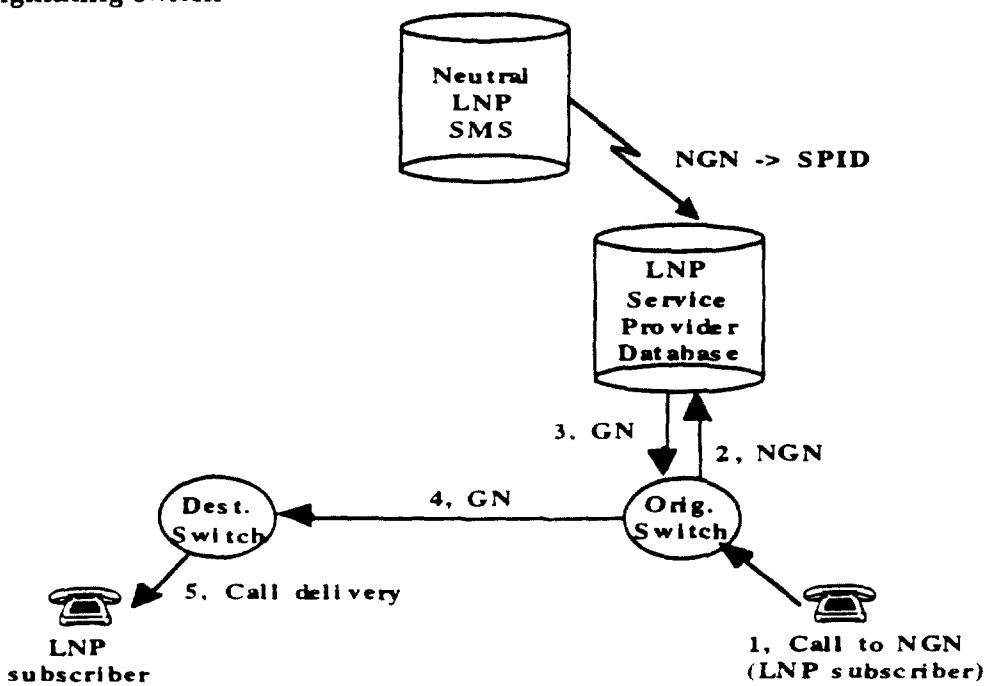

Figure A - Local Number Portability Architecture

13.5.4.16 SCP Database Responses

Like the 800 database, each carrier could own and maintain their own database, if desired. This would probably require a third party administrator to maintain uniform data in all systems.

Carriers would be able to share an SCP, as long as access is provided through an STP, which is a normal network configuration. The STPs would provide multiple link access to a variety of carriers. Once again, it would be assumed that the database would be managed by a third party for uniformity.

The decision to co-locate the LNP database with other AIN services will be based on the transaction handling capacity of the platform. The NGN LNP solution only requires database lookup for LNP customers, and as such will require less lookup than other LNP solutions. It will be a business decision of whether to co-locate a database or not.

13.5.4.17 Type of Number Portability Supported

Service Provider Portability

The non-geographic LNP call model fully supports service provider portability. Customers can change their service providers and retain their non-geographic numbers. The service providers are responsible for updating their customers' information in the LNP database.

Location Portability

The NGN LNP approach will support location portability. The geographic boundary can be LATA, NPA, state or even national. It is not limited by this approach but rather by industry agreement as well as government regulation.

Since non-geographic numbers do not have any geographic connotation, using the NGN approach for location portability, will not confuse customers with transported NXX codes or area codes that have moved from one location to another. The use of non-geographic numbers is supportive of location portability and comes at no additional cost.

If the ported number has moved and the call becomes a toll call, a toll indicator will be used to alert the calling customer.

Service Portability

The non-geographic LNP approach can support service portability. However, it requires that the new service provider has the capability to support the new service.

13.5.4.18 Service Interactions

If an IN trigger, such as E800, is used, there should be no feature impact on the end user because AIN triggers would not be used. If AIN is used, the PODP trigger will be utilized. Thus, no impact is anticipated.

13.5.4.19 Switch Features

The NGN LNP call model should have no conflict with any switch features that would use the 3/6/10 digit PODP trigger, because it will use a different sub-system identifier.

13.5.4.20 ISDN Features

The ISDN feature set should work as normal, because the NGN LNP approach does not break ISDN call processing triggers.

13.5.4.21 Telephone Relay Services (TRS)

The NGN LNP approach supports TRS. It will have no impact on this service.

13.5.4.22 Vertical Services

The NGN LNP solution has no impact on vertical services as they exist today.

13.5.4.23 Full Equal Access/Multiple PIC

The NGN LNP approach has no impact on equal access/multiple PIC.

13.5.4.24 Automatic Callback / Automatic Recall

After the originating switch performs the database query, the SS7 messages will contain the geographic numbers of both the calling and called customers. Automatic callback and automatic recall will work as it does today.

13.5.4.25 Screening List Editing

The LNP subscriber's geographic number should be used in the screening list. The screening list
will then function as it does today.

13.5.4.26 Caller ID and Privacy

Since the non-geographic LNP proposal requires an associated geographic number, a ported customer's ANI will always be the customer's dialable geographic number. As such, the geographic number will technically work for all existing network functions that use ANI Based features. However, it may cause some minor confusion if the called parties not always recognize the geographic numbers associated with calling parties for some services such as calling number delivery, some enhanced CLASS services (which capture the calling number), or on their toll bills when they have accepted a collect call from a ported customer.

Nonetheless, with time, customer education regarding the nature of the non-geographic numbers and their associated geographic number will overcome these minor implementation issues. For example, it should be noted that Calling Name service (which is growing rapidly) does delivers the correct name under the NGN LNP proposal, even though the calling number may not be one the customer recognizes. To technically overcome these minor issues would require expensive network changes to signaling and switches, which would identify and signal forward the non-geographic number in addition to the geographic ANI. Should standards bodies make changes to an existing ISUP parameter (e,g. the Generic Address Parameter (GAP))to transport more than one telephone number, both the geographic and non-geographic numbers will be available to support all CLASS features.

If the calling number is considered to be the ported customer's assigned geographic number, then NGN LNP proposal supports this supplementary service without any impact. If the calling number is considered to be the customer's assigned non-geographic number, then the NGN LNP proposal will display the calling customer's geographic number, and not his portable non-geographic number. The important issue here is that the called party has a number that he can reply to.

13.5.4.27 Caller ID with Name

The caller ID with name feature is not impacted by the NGN LNP proposal.

13.5.4.28 Call Forwarding

The NGN LNP proposal does not impact the call forwarding service. After the database dip, the ISUP messages carry the geographic numbers of the calling and called parties as it is done today. The call forwarding feature should function as it does today.

13.5.4.29 Calls to Ported Service Access Code Numbers (500, 800, 900, etc.)

No impact on call set-up times to SAC numbers.

13.5.4.30 ISDN Circuit Switched Voice

The calling party geographic number will be presented to an ISDN BRI/PRI in the calling party number information element. Since the non-geographic LNP proposal requires an associated geographic number, a ported customer's ANI will always be the customer's dialable geographic number. The redirecting number will be presented to an ISDN set in the redirecting number information element.

13.5.4.31 ISDN Circuit Switch Data

After the database dip, the call will be routed using the geographic numbers. The call will be routed properly.

13.5.4.32 Selective Call Acceptance

This service will work properly if the customer has programmed the geographic number of the parties he wishes to be able to reach him. However, if the customer programs the non-geographic number, then the caller would be blocked when it was desired that the caller not be blocked, because the ISUP messages contains only the geographic numbers of the calling and called parties. This could be overcome if the customer programs the geographic number of the originating caller.

13.5.4.33 Selective Call Rejection

This service will work properly if the customer has programmed the geographic number of the parties he wishes to reject. However, if the customer programs the non-geographic number, then the caller would not be blocked when it was desired that the caller should be blocked. This could be overcome if the customer programs the geographic number of the originating caller.

13.5.4.34 Customer Originated Service Order Activation/Deactivation

No impact to the customers. However, the service provider needs to use the assigned geographic number when updating the database.

13.5.4.35 Number Administration

The NGN LNP proposal operates in a manner similar to the 800 SMS database administration arrangement. Non-geographic numbers can be centrally administered or they can also be locally administered. This will depend on industry agreements.

The non-geographic LNP solution requires the reservation of a set of non-geographic NPA codes. Initially only one such code will be needed but if demand for portability grows additional codes will be necessary. Since these non-geographic numbers are both service provider and location portable the numbers will remain with the subscribers when area code splits occur.

13.5.4.36 Operator Services Impact

No changes are required to the traditional End Office or Access Tandem signaling to the Operator Service Switches (either TOPS or OSPS). Calling non-geographic customers' end offices would signal forward their assigned geographic numbers (i.e., ANI), and called non-geographic numbers would be translated at the end office or access tandem prior to signaling to the operator switch. Billing numbers subsequently signaled by DTMF to the operator switch would use existing DTMF signaling technology.

Likewise no changes are required to the call completion signaling from the Operator Service Switches (either TOPS or OSPS) to the end offices or access tandems. All numbers used in this signaling would also be geographic numbers and all signaling would be as exists today.

The non-geographic LNP call model does not have any known impact. It does not require any changes to the network interfaces for DA systems. With the translation at the operator switch of non-geographic listings of ported numbers returning the geographic number, then rating and billing would be performed as done today. If the geographic number (or both geographic and non-geographic number) is maintained in the DA retrieval system, then translation is unnecessary for proper rating and billing of DACC calls.

Calls from non-geographic numbers would provide the associated geographic number ANI. Therefore, rating and billing for DACC calls would proceed as it does today.

13.5.4.37 Timing/Availability

The non-geographic LNP approach can be implemented in a timely fashion (less than one year) since it is very similar to the expansion of 800 service to include the use of the 888 code in addition to the 800 numbering resource. Since there are no new standards required to implement the non-geographic approach no additional timing or availability concerns or impacts are foreseen.

13.5.4.38 SS7 Impacts

No new Signaling Values are required to implement the NGN LNP solution. Proper routing and billing is possible without any modifications to the existing signaling protocol. It may be nice to enhance the protocol in the future to provide for indicators that a database dip has been performed, and to allow both the Ported number and the geographic routing number to be carried via SS7, but these enhancements are not required for the NGN LNP solution.

To separate LNP Service from other data base/service control point (SCP)Services that could be provided between the Switch and data base/SCP, a new unique SS7 SCCP subsystem number (SSN) should be assigned.

13.5.4.39 Capacity

With the non-geographic LNP solution, only those calls to the ported numbers require database queries. Thus, the impact to the signaling network capacity is minimal.

Other LNP solutions which require database queries on all calls, whether to ported or non-ported numbers, will dramatically impact signaling network's capacity.

13.5.4.40 Relative cost

Since the NGN LNP solution requires minimal changes to existing switching equipment, virtually no change to existing signaling systems, and is very closely related to the existing 800 type database the cost to implement this solution is minimal. All other proposals involve significantly more changes and upgrades to the existing equipment, signaling and network and will consequently cost much more to implement.

13.5.4.41 Billing/Rating

The general method of billing being proposed is a switch based AMA format that will be LSSGR compatible. This does not preclude the billing of LNP type calls on an AIN basis if a service provider so chooses. Billing will require the assignment

(addition) of a unique call type to reflect the new LNP non-geographic NPA code (e.g., 333). It is assumed the existing record format for E800 type calls can b. used for LNP by replacing the E800 entry with the LNP non-geographic NPA code entry. In a later phase of the project it may be beneficial to modify the AMA record format such that the geographical as well as the non-geographical Directory Numbers are recorded. This would allow a service provider greater flexibility in the down stream billing center as to how the call is displayed and billed.

13.5.4.40 AMA recording

The general method of billing being proposed is switch based AMA format that will be LSSGR compatible. This does not preclude the billing of LNP type calls on an AIN basis if a service provider so chooses. Billing will require the assignment (addition) of a unique call type to reflect the new LNP non-geographic NPA (e.g., 333). It is assumed the existing record format for E800 type calls can be used for LNP by replacing the E800 entry with the LNP non-geographic NPA code entry. In a later phase of the project it may be beneficial to modify the AMA record format such that the geographical as well as the non-geographical Directory Numbers are recorded. This would allow a service provider greater flexibility in the down stream billing center as to how the call is displayed and billed, but would not be required initially to provide LNP service. This enhancement would allow the network to continue to deal with the geographic number to determine the routing and rate plan, but allow the dialed ported number to appear upon the customer bill.

13.5.4.41 Transparency

Calls from non-ported numbers to non-ported numbers process exactly as they have always done with no impact at all.

The NGN LNP call model provides call rating based upon the geographic number associated with the ported number after a database query has been performed for ported numbers, in conjunction with the originating NPA-NXX of the calling party. This allows the switching system to directly determine the rate plan that should be used, local or toll.

Calls from ported numbers to non-ported customers will use the geographic routing number of the originating party (NPA-NXX) and the NPA-NXX of the dialed number to directly determine the rate plan. Calls are rated based upon the geographic number associated with the ported number of the calling party. The NPA-NXX of the geographic number uniquely identifies the exchange and service provider of the calling party.

Calls from a non-ported number to a ported number are also rated based upon the geographic number associated with the ported number. If the customer has not moved physically, there is no impact. If the customer has moved outside the rate center, the new geographic number associated with the non-geographic number will indicate the new rate center for accurate rating and billing. In this case, a toll indicator can be provided to the caller.

Unlike other LNP solutions which port existing geographic numbers, there is no association in consumers minds that a ported number is associated with a specific rate center.

13.5.4.42 LERG Impact

No changes are required of the LERG for the LNP service.

13.5.4.43 Sent Collect

Sent collect calls from non-geographic ported numbers will always be rated properly based upon their associated geographic numbers. The AMA recording modifications discussed above for later phases of the project will capture the non-geographic number for appearance on the bill of the called party.

Sent collect calls to non-geographic ported numbers will likewise be rated based upon the associated geographic number and properly billed to the ported number of the called party. Billing information will be forwarded to the entity identified by the geographic number for customer billing and settlement for alternate billed calls.

13.5.4.44 800 Calls from Ported Number

In the NGN LNP approach, 800 calls from a ported non-geographic number are routed based upon the associated geographic number of the originator. 800 calls from a ported non-geographic number are also rated based upon the associated geographic number of the originator

13.5.4.45 Access Record

The NGN LNP call model will generate accurate access records, rated based upon the geographic numbers associated with ported numbers.

13.5.4.46 10-digit Number Recording

Since, by definition, non-geographic numbers all reside in a dedicated non-geographic NPA(s), 10 Digit recording is not a problem. All ported numbers will be 10-digit NANP numbers from one or more designated NPAs. Each ported number will have an associated 10-digit NANP geographic number associated with it, which identifies the serving central office, and thereby the V&H coordinates and carrier. There is no impact.

13.5.4.47 Carrier Identification

The proper carrier identification information will be recorded within the AMA record based on the geographic number, so that the record will be treated properly.

13.5.4.48 CMDS Message Clearing

Under the NGN number portability call model, CMDS message clearing is carried out based entirely upon the geographic number associated with each non-geographic number in concert with the CIC code of the carrier used.

13.5.4.49 End User Impacts

Toll indicator/caller confusion

The non-geographic LNP call model can provide a toll indicator to the end user . Once the switch performs the database query, the destination end user's geographic number is obtained. From the geographic number it can be determined if the call is or is not a toll call. If it is a toll call, an alert can be provided to the caller.

Transparency

Customers will not perceive a difference in call redirection when a number is ported. The calling parties dial as usual, independent of whether the called number is ported to another wireline, a cellular mobile line or a PCS line. The called or calling parties would not receive any call redirection indicator unless it is required.

Ubiquity

The non-geographic LNP approach provides a total network solution. It supports ubiquitous number portability by using databases to store information for all customers that have the specific non-geographic numbers (LNP numbers). This call model supports service provider portability, location portability, as well as service portability for any type of customer terminal (land-line, wireless or PCS).

Only calls to the specific non-geographic numbers require database queries. If a local exchange does not have the capability to perform the query, the call can be routed to another switch that has the capability. Thus, it is not necessary to deploy the LNP capability to all the switches in a network. This procedure is similar to the way that 800 service is deployed.

13.5.4.50 Directory listing

The NGN LNP approach is similar to how current 800 calls are processed. Mechanized directory listing and information would be supported as done currently.

13.5.4.51 Participating carriers

The same types of carriers that are involved in the routing and rating of 800 calls should be involved in supporting the implementation of the NGN LNP method. If certain carriers choose to not be involved in LNP then any calls to ported non-

geographic numbers will be processed by the first switch (or tandem) in a network that participates in the provision of LNP.

13.5.4.52 Additional remarks / Summary

The NGN LNP proposal represents a nationwide overlay network approach to provide LNP. The NGN LNP proposal incorporates a minimal set of changes to the existing network infrastructure while supporting the ability of a telecommunication user to port their number in the context of service provider portability, location portability and service portability. This is done in the context of using non-geographic numbers which can be assigned to all customers who desire to keep their number when they either change providers, move, or change their telephone service. This is the only LNP plan that provides a permanent portability solution since all plans using geographic numbers will be subject to change if area code splits are implemented in a specific portability region. The NGN approach is ideally suited for a national solution to provide portability in an identical fashion thoughout the country. Since the NGN approach is very similar in concept to today's 800 service there will be significantly less development effort, cost and time needed to implement this approach.

14.0 Interim Solutions

It is generally recognized that the provisioning of a ubiquitous number portability capability nationwide could take several years and significant resources to accomplish. As such, it can be expected that the initial service deployment for number portability will be in geographically limited, non-contiguous areas. Such deployments may utilize unique, non-standard technologies and methodologies that may not meet all of the objectives detailed in 4.0, but provide a measure of number portability until a permanent solution is fully developed and deployed. Most near-term alternatives will probably require routing traffic through the facilities of the carrier to whom the NPA/NXX of the dialed number was originally assigned (e.g., donor switch), and redirecting such traffic at that point based upon information contained in the incumbent's internal or external data base.

14.1 Near Term Alternatives

Several different alternatives have been proposed for providing near-term number portability among service providers, including different forms of call forwarding and Direct Inward Dialing (DID). Using a call forwarding approach, the dialed number would initially be routed to the switch assigned the NPA/NXX. At that point the number would be retranslated to a new, 10-digit telephone number, which is substituted to complete the call to its intended destination. A pictorial description of this arrangement is shown as Figure 14.1-1 below.

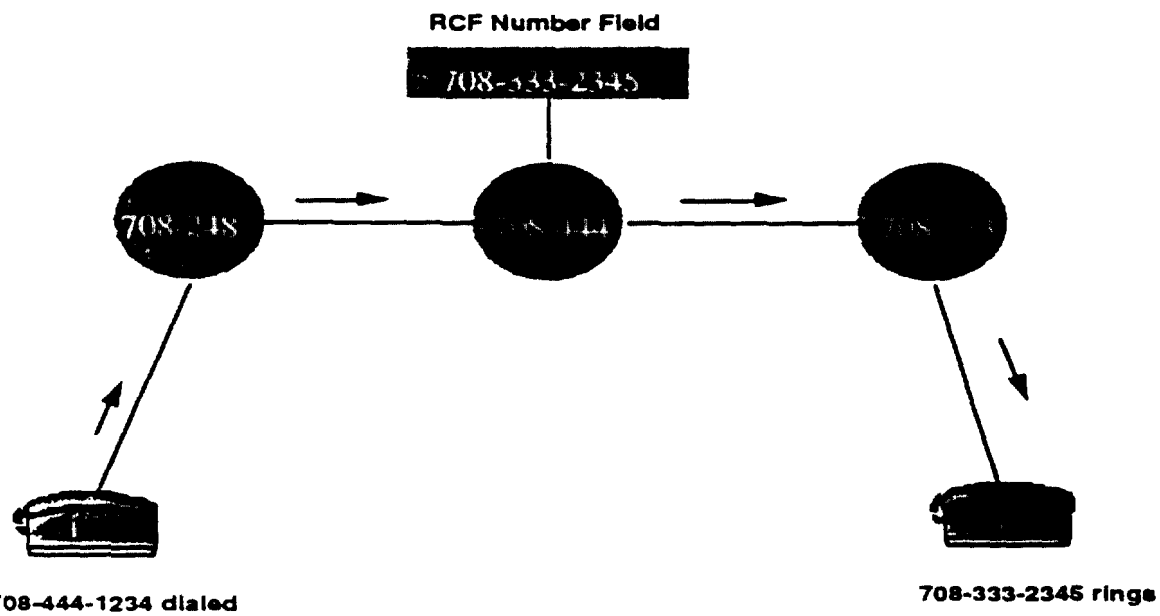

Figure 14.1-1

To avoid the need for assigning two telephone numbers to the called subscriber under this scenario, it may be possible to simply append a 10XXX/101XXXX carrier access code onto the original dialed number at the incumbent LEC's switch for

rerouting over existing Feature Group D trunks to the competing provider. A pictorial description of this arrangement is shown as Figure 14.1-2 below.

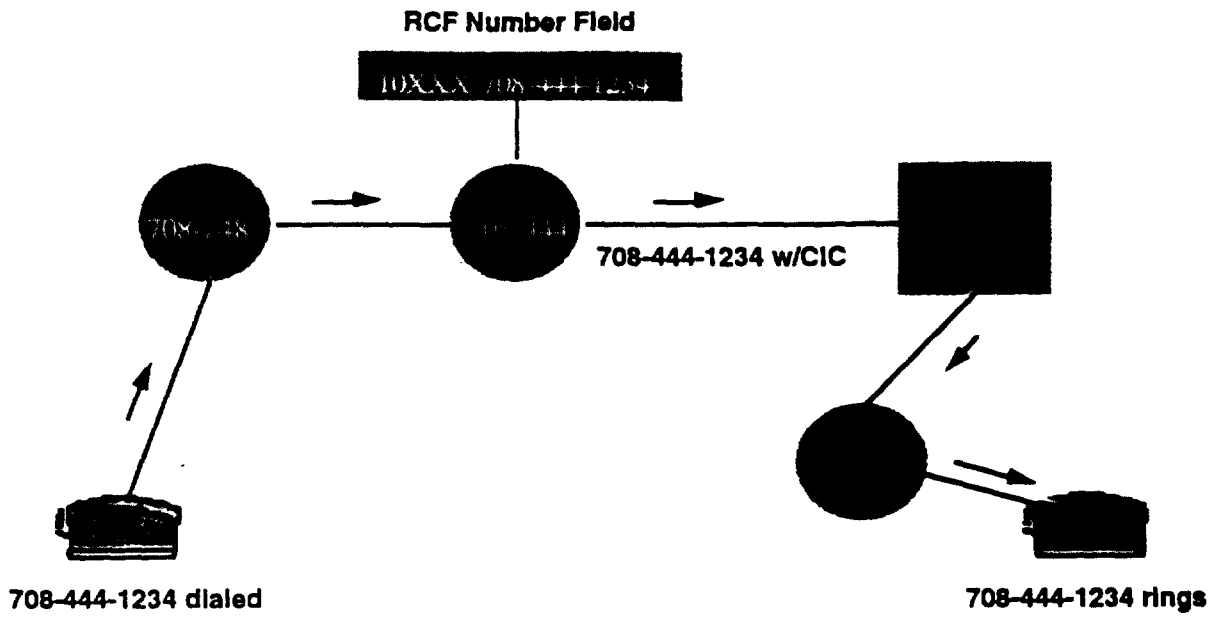

Figure 14.1-2

Another set of alternatives employ DID-type routing, which, again, requires the call to initially be routed to the switch assigned the dialed NPA/NXX. The call is thereupon placed onto a dedicated trunk group that is connected to the competing provider's switch. A pictorial description is shown as Figure.14.1-3 below

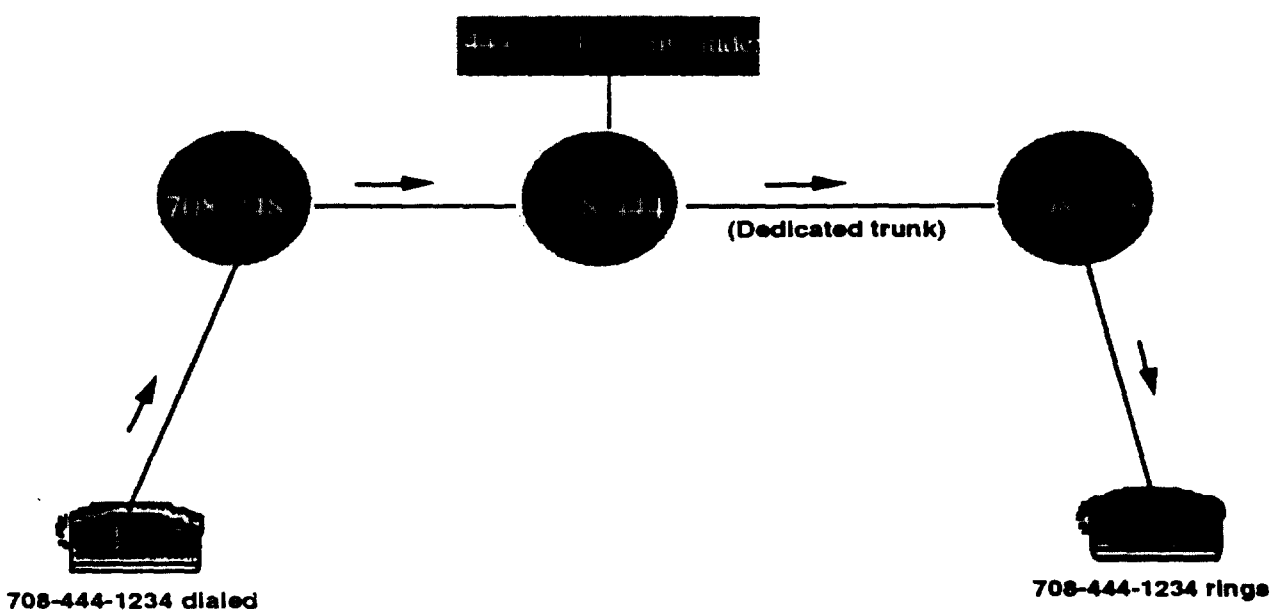

Figure 14.1-3

To avoid the need for dedicated trunk groups from each switch in which numbers have been ported, it may be possible to append a unique pseudo-code onto the dialed number at the incumbent LEC's switch which will identify the competing provider, and allow the call to be routed to the tandem over a common trunk group. At tandem the pseudo-code is recognized and removed, and the call is forwarded the appropriate competing provider. A pictorial description of this arrangemen shown as Figure 14.1-4 below.

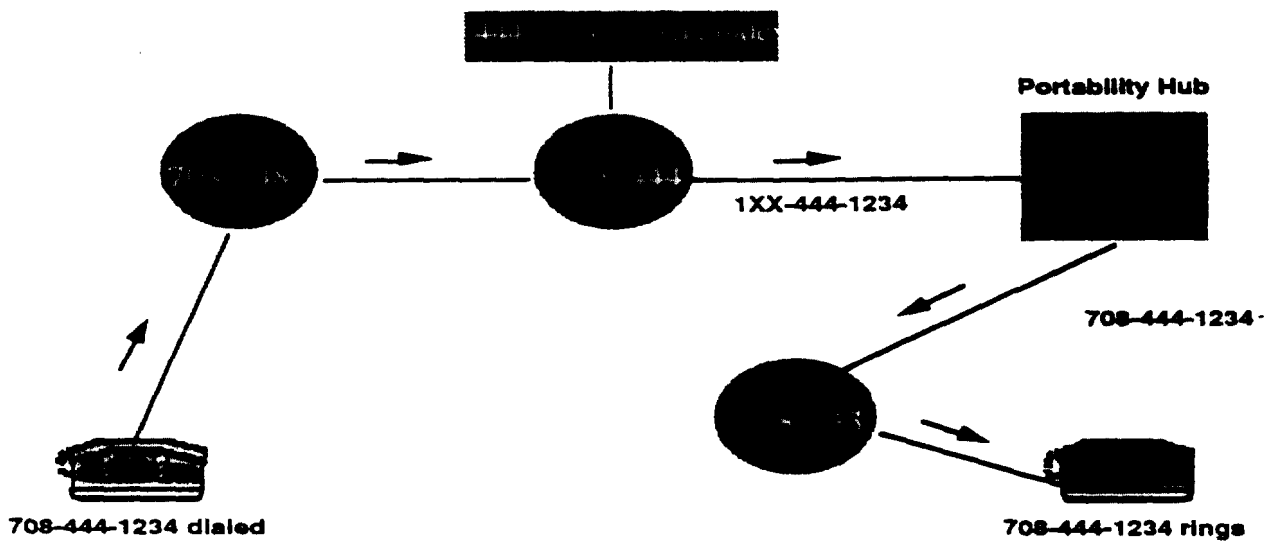

Figure 14.1-4

As described above, most near-term alternatives require an initial routing of the call into the incumbent LEC's network, performing some form of internal or external data base dip at that point, and thereupon redirecting the call to the competing provider's network. It is generally acknowledged that such methods contain certain technical inefficiencies and limitations in the provisioning of number portability that hopefully can be avoided once a more permanent solution is developed and implemented. They do, however, allow for fast deployment of the capability itself in specific locales without impacting other, non-portability service areas and don't require any commonality in technology or methods.

GLOSSARY

DEFINITIONS

The following definitions are offered for terms contained within this document. Many of these definitions are taken verbatim from documents created in other INC workshops or industry forums.

Access Time - the time beginning **[period commencing]** when the caller completes dialing a call and ending when the call is delivered by the originating Access Provider to the Service Provider or to a Transport Provider for the Service Provider. (Note that Access Time is only one component of call set-up time.)

Advanced Intelligent Network (AIN) - a service-independent architecture which allows its service provider to create and/or modify telecommunications services.

ANI (Automatic Number Identification) - the automatic identification of the billing number associated with the calling station.

ANI (Automatic Number Identification) II Codes - ANI II digits are two digits that are sent with the originating telephone number identifying the type of originating station (for example: Plain Old Telephone Service [POTS]{00}, Hotel/Motel [06], etc.). Use of the ANI II codes in an SS7 message is referred to as the Originating Line Information Parameter (OLIP).

BTA (Basic Trading Area) - One of 487 basic areas of commerce as defined by Rand-McNally, used to define a wireless serving area.

BRIDS (Bellcore Rating Input Database System) [formerly BRADS] - a data base system that contains NANP rating data including Canada and the Caribbean, while not part of the NANP also includes Mexico due to its proximity. This system generates the Terminating Point Master (TPM) for billing purposes.

Call Set-up Time (see access time)

CIC (Carrier Identification Code) - is a numeric code which is currently used to identify an entity who purchased Feature Group B and/or Feature Group D access services. This code is primarily used for routing from the local exchange network to the access purchaser and for billing between the Local Exchange Carrier and access purchaser. CICs are assigned by the North American Numbering Plan administrator.

CO Code (Central Office Code) - The sub-NPA code in a telephone number, i.e., digits D-E-F of A 10-digit NANP area address. CO Codes are in the form OF "NNX" or "NXX", where n is a number from 2 to 9 and X is a number from 0 to 9 . CO Codes may also be referred to as NNX codes, NXX codes or NNX/NXX codes.

Domain - A set of all possible numbering values or addresses.

Donor Switch - The switch to which the dialed NPA/NXX has historically been assigned, and from which the dialed number was initially ported.

Entity - For the purposes of obtaining a numbering resource, an entity is an applicant that meets the criteria of the guidelines and as a business, purchases telecommunication arrangements.

Geographic numbers - numbers which correspond to discrete geographic areas within the NANP area.

HLR (Home Location Register) - The location register to which the end user information is assigned for record purposes.

ICCF - The Industry Carriers Capability Forum provides an open forum under the auspices of the Carrier Liaison Committee to encourage telecommunication entities to discuss and resolve, on a voluntary basis, nationwide technical issues associated with telecommunications network interconnection, and the issues associated with the assignment and use of NANP/NANP area numbering resources.

INC (Industry Numbering Committee) - a standing committee of the Industry Carriers Capability Forum (ICCF) that provides an open forum to address and resolve industry-wide issues associated with the planning, administration, allocation, assignment and use of numbering resources within the NANP area.

Intelligent Network (IN) - a telecommunications network architecture in which processing capabilities for call control and related functions are distributed among specialized network nodes rather than concentrated in a switching system.

LATA (Local Access and Transport Area) - also referred to as service areas by some BOCs, and serve two basic purposes: to provide a method for delineating the area within the BOCs may offer services and, to provide a basis for determining how the assets of the former Bell System were to be divided between the BOCs and AT&T at divestiture.

LERG (Local Exchange Routing Guide) - contains information about local routing data obtained from the Routing Data Base System (RDBS). This information reflects the current network configuration and scheduled network changes for all entities originating or terminating PSTN calls with the NANP excluding Canada.

Location portability *- the ability of an end user to retain the same geographic or non-geographic telephone number (NANP numbers) as he/she moves from one permanent physical location to another. Location portability will involve either of the following scenarios:*

1) new location is within the same wireline serving central office area.

2) new location is within a different wireline serving central office area. or wireless serving area.