Table 1 Characteristics of the Three Levels of Performance

Class	Composition		Bandwidth Rate	Total Rate	Threshold
low-res 384 × 640	MPEG stream audio ancillary data	digital	4 Mb/s	4Mb/s	6 dB CNR
medium-res 576 × 960	enhanced motion vectors selection information additional audio	digital	4 Mb/s	8 Mb/s	17 dB CNR
	selected residual coeffs.	analog	2.5 Ms/s	2.5 Ms/s	
high-res 768 × 1280	enhanced motion vectors selection information additional audio	digital	4 Mb/s	12 Mb/s	29 dB CNR
	selected residual coeffs.	analog	2.5 Ms/s	5 Ms/s	

be made to seem as though they were random, a substantial improvement would result.

D. An Example of a Terrestrial System Having the Desired Properties

We now present the outline of a terrestrial broadcasting system that is "ideal" in the sense that it is intended to meet the requirements previously discussed. It uses some of the techniques that were mentioned earlier and is suitable for use either with a centralized transmitter or in a single-frequency network. The latter gives the highest possible spectrum efficiency; the former gives spectrum efficiency at least as good as the all-digital schemes. It features multiresolution combined source and channel coding. As a result, it supports a good transition scenario and makes possible the manufacture of relatively inexpensive receivers for either configuration of transmitters. Coverage is extended at the lowest performance level and very high resolution is achieved in regions of high signal strength. Interoperability is good, as the signal can easily be decoded at a number of performance levels, the lower levels requiring simpler decoders. Simpler encoders can be used when broadcasting lower-resolution material, such as upconverted NTSC, in which case coverage is further extended. Hybrid analog/digital transmission is used along with a combination of spread spectrum and COFDM for high efficiency and good multipath performance. Digital data is subjected to a powerful forward error-correction process. An all-digital version is available for applications that require it.

The particular system under simulation has a maximum resolution of 768 × 1280 × 60 fps progressively scanned. There are three levels of quality, recoverable at different receiver CNR's, as shown in Table 1. This system is meant to be an example of what can be done with the methods used, and is not a prescription for the best possible scheme for any particular application, although it is thought to be reasonable for use in the US with 6-MHz channels. Fig. 5 shows sample frames at the three levels of resolution. These frames are from a coded sequence with a good deal of motion.

1) Source Coding: A pyramid scheme as in Fig. 6 is used. A high-level block diagram of one level of the coder is shown in Fig. 6. It is clear that the system is closely related to MPEG. The input signal to the coder is the difference between the filtered original and the image as reconstructed by the receiver from the lower levels, if any. A low-pass filter picks out the portion of the difference signal to be coded. The resulting signal is downconverted and the predicted frame at the same level is subtracted. The prediction error is subjected to a wavelet transform (any other transform might be used) and the coefficients to be retained are then adaptively selected. The selected coefficients are transmitted as analog samples and the adaptive selection information is transmitted digitally,[33] using less than one bit/sample.

The predicted frame consists of the previous frame plus a motion-compensated coded version of the predicted change from the last frame to the current frame. Fig. 6 shows the motion estimation being performed by comparing the current frame with the reconstructed previous frame at this coding level. In all likelihood, the final system will calculate the motion vectors directly from the original high-resolution video, using an incremental scheme for the motion information required at each level. Finally, the reconstructed frame is upconverted and subtracted from the input signal to form the input signal for the next level. The decoder at the receiver consists of the elements within the dotted lines.

The lowest level of the pyramid uses MPEG-2 coding and all-digital transmission at a gross data rate of about 10 Mb/s, including audio, forward error correction, and ancillary data. The net corrected video data rate is something less than 4 Mb/s. MPEG coding permits advantage to be taken of available chips. In the simplest receiver, the entire source decoder would consist of a single such chip. The higher levels of the coder generate analog coefficient amplitudes,

[33] This means that the amplitude and identification of the coefficients are not jointly coded, as in MPEG, and that the correlation between these two values is not fully exploited in the compression scheme. Much of this apparent correlation is related to the fact that the selected coefficients are larger and more numerous at lower spatial frequencies and smaller and less numerous at higher spatial frequencies. The sparsity of higher-frequency coefficients is heavily exploited in the vector coder used to transmit the identification of the selected coefficients. The overall efficiency of coding the coefficient information is at least as high as in MPEG.

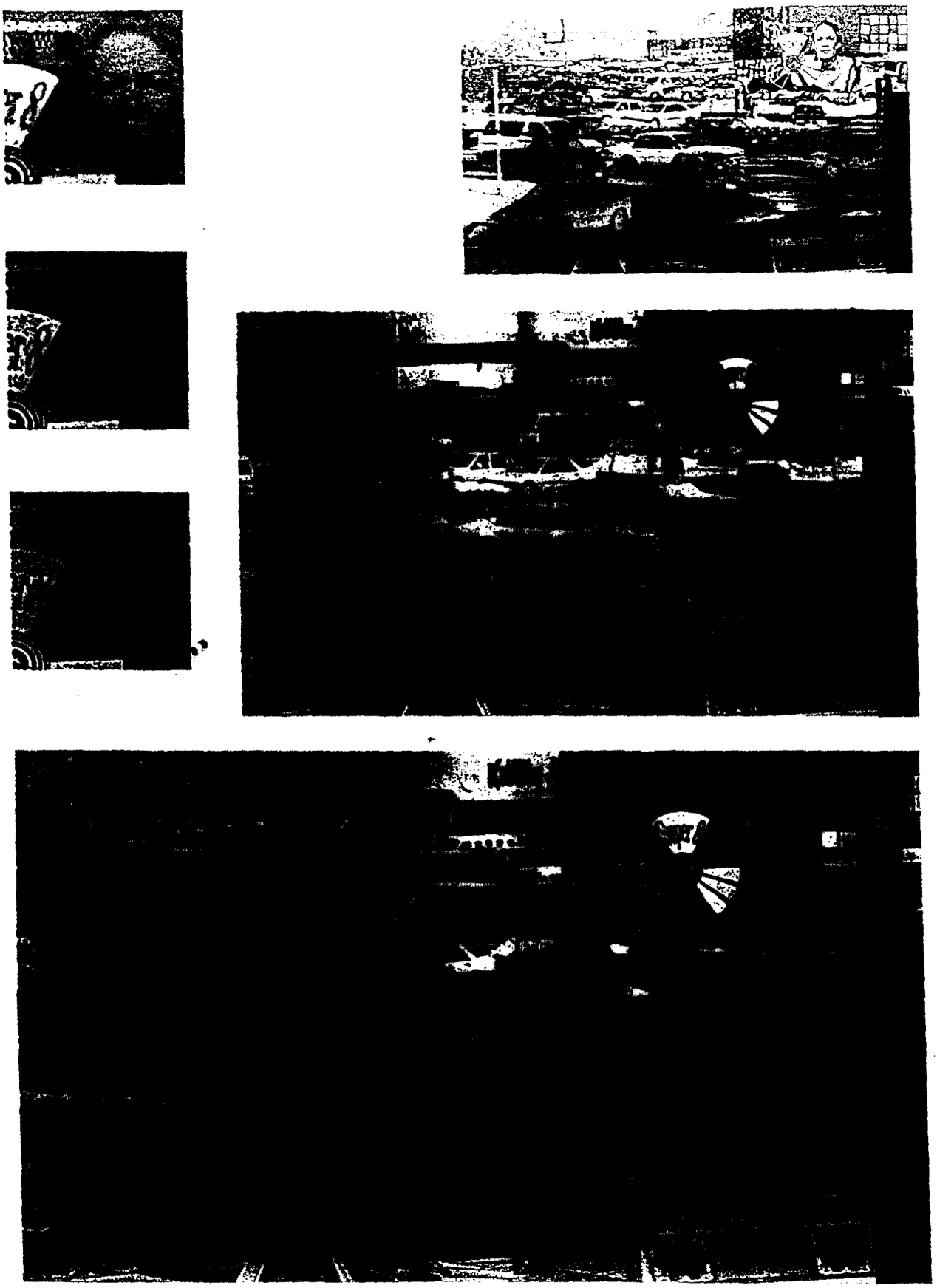

Fig. 5. These three pictures are of a single frame in a sequence with a good deal of motion, produced with the 3-level system described in Section VIII. They are the low-, medium-, and high-resolution versions with the parameters [illegible] in Table I. All three pictures are somewhat reduced in resolution by the printing process. In order to show the true resolution more accurately, the [illegible] difficult portion of each picture has been enlarged to the same size. Defects that may be present in these enlarged pictures are nearly [illegible] at a time separation or lag distance of 60 frames/s.

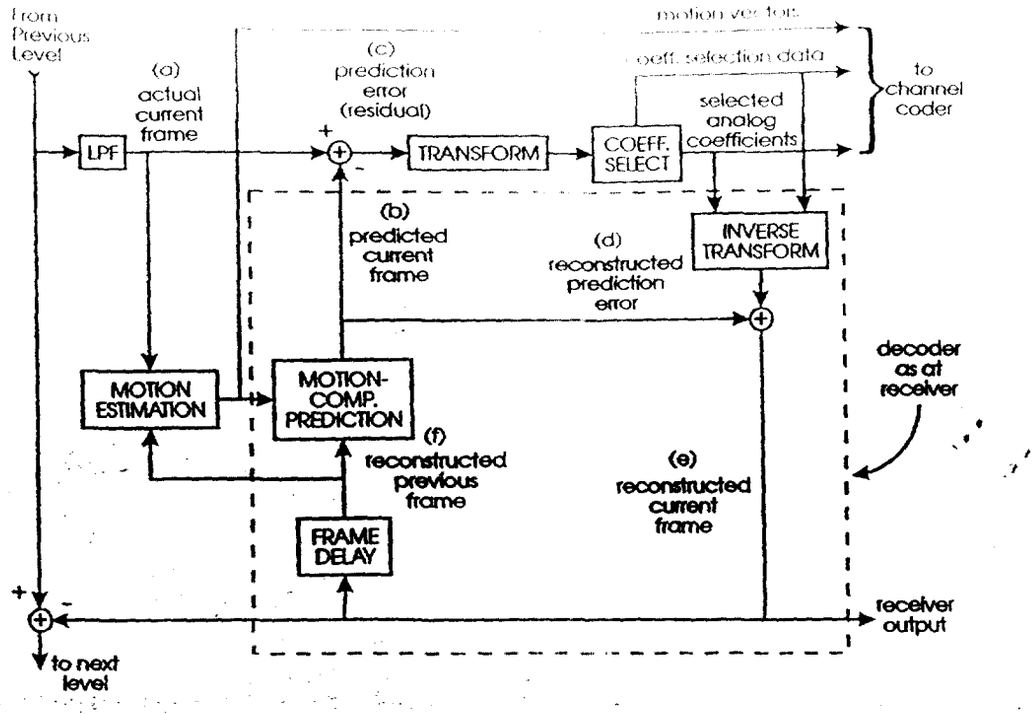

Fig. 6. *One Level of the Pyramid Source Coder/Decoder.* The video data for the current frame that was not coded at lower levels is processed by a low-pass filter, providing the data (a) to be coded at this level. The predicted current frame (b) is then subtracted from the LPF output. The resultant prediction error (c) (the "residual") is subjected to a wavelet transform (any other transform could be used) and the "important" coefficients then selected in a quantity such as not to exceed the allowed transmission capacity, which is 2.5 Msamples/s each for levels 2 and 3. Motion vectors are estimated by comparing the actual current frame with the reconstructed previous frame (f) in the motion estimator. (Motion estimation can be performed in many different ways.) Motion vectors plus coefficient selection data go to the digital input of the channel coder, while selected transform coefficients go to the analog input. Complete decoding for each level, using a method identical to that of the receiver, is required at the encoder in order to produce the reconstructed previous frame and, from it, the predicted current frame, using motion-compensated prediction. The reconstructed current frame (e), which is produced by adding the reconstructed prediction error (d) to the predicted current frame (b), is subtracted from the signal from the previous level to produce the data for the next level, if used. For the purposes of this explanation, it is assumed that there is no delay in any module except the delay module and the motion-compensated predictor. Physical implementation as a pipeline processor requires additional delay modules.

digital coefficient selection data, digital motion vectors, and ancillary data, together with additional audio data, if desired.

Embellishments as used in MPEG and similar systems may, of course, be used here as well. For example, prediction can be bidirectional (at the cost of additional storage) the better to deal with newly revealed areas, a decision between inter- and intraframe coding can be made on a frame-by-frame or block-by-block basis, and the coding can be adapted to the frame rate of the original, as for 24-fps film [35]. On scene changes, the prediction error is naturally much larger than for continuous motion, but the changes can be spread out over several frames to minimize the peak data rate. Of course, scene changes can be flagged.

2) Channel Coding: The transmission uses the constellation shown in Fig. 7. It is a nonuniform 64-PSK scheme with 5 Msymbols/s, for a gross data rate of 30 Mb/s[34] and a net error-free data rate of about 12 Mb/s. Digital data sets the angle of the constellation point, and analog data (actually a constant plus the bidirectional coefficient pulse stream at 5 Msamples/s) sets the amplitude. Three digital streams, each of 4 Mb/s, are fed into the three identical error-correction systems, each consisting of an outer (rate .8) Reed–Solomon coder and an inner (rate .5) trellis coder. The output of each of the systems is a four-level (2 bits/sample) stream at 5 Msymbols/s. The three outputs are combined to produce a 64-level signal that determines the angle of the constellation point.

This particular constellation is used because it allows nearly independent decoding of analog and digital data. For the lowest level, with a gross digital data rate of 10 Mb/s and a net error-corrected data rate of only 4 Mb/s, the constellation looks like 4-QAM or 4-PSK, and is very easy to decode. In addition, it is quite robust in the presence of phase noise. It should facilitate the design of less expensive receivers.

The channel coder is shown in Fig. 8. The two streams of analog data from levels two and three of the pyramid coder, each of about 2.5 Ms/s, are weighted, added, and input to the spread-spectrum modulator (SSM). The output of the SSM is an analog data stream at 5 Msamples/s in which each sample is a linear combination of a large number of successive analog coefficients, weighted in such a way that the coefficients of level 2 are recoverable at a lower CNR than those of level 3, and that the relative SNR of the recovered coefficients is optimum according to their spatial frequency. The three streams of digital data are processed

[34] We cannot, of course, expect to receive 30 Mb/s with a usably small error rate except at very high CNR. In order for trellis coding to have a high coding gain at a particular CNR, the equivalent raw error rate of what is sent in the channel must be very high.

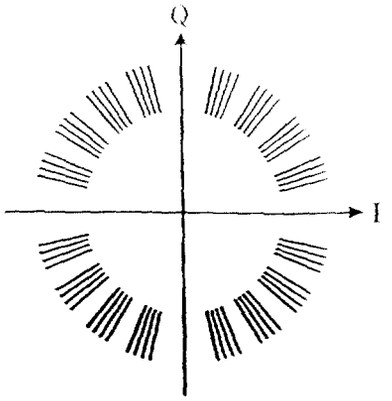

Fig. 7. *The Constellation.* This is the hybrid constellation to be used by the system. Digital data modulates the angle to give nonuniform 64-PSK with about 10–12 dB between levels. The amplitude is a constant plus a function of the analog transform coefficients after spread-spectrum processing. The lengths of the lines are proportional to the rms value of the analog signals.

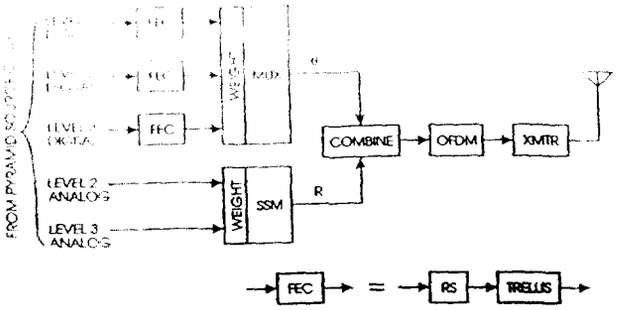

Fig. 8. *Channel Coder.* Digital data from the three levels is processed by three identical forward-error-correction modules, each consisting of a .8 rate Reed–Solomon block coder plus a .5 rate trellis (convolutional) coder. The coded data is weighted and combined in the multiplexer to give the desired angle of the constellation point. Analog data from levels two and three are weighted, subjected to spread-spectrum processing, and added to a constant to produce the desired radial amplitude of the constellation point. The two are combined to produce five complex megasymbols per second. The analog and digital data streams are combined and input to the OFDM processor, whose output goes to the transmitter.

by the FEC as previously described, and then combined with the output of the SSM to form a complex hybrid symbol stream at 5 Msymbols/s. The latter is input to the COFDM processor, which produces a baseband version of the signal for input to the transmitter [36].

The corresponding receiver is shown in Fig. 9. The receiver generates the modulated signal at baseband, corrupted by noise and frequency distortion in the channel. The COFDM demodulator produces a version of the complex hybrid symbol stream, and the properties of the channel (gain, phase, and CNR for each carrier) are estimated on a continuing basis. The amplitude of the demodulated signal is passed to the spread-spectrum demodulator (SSD) along with the channel estimate to produce the coefficients for levels 2 and 3. The phase of the demodulated signal is passed to the demultiplexer, which also makes use of the channel estimates, and is then separated into the three original streams. These are decoded by the error-correction decoders, again using the channel estimates. The recovered analog and digital signals are used in the pyramid decoder to generate the several levels of the video signal.

Two key performance measures for the digital part of the system are shown in Fig. 10. The BER of each of the three data streams, as a function of the CNR in a channel perfect except for noise, is depicted by the solid lines, using the left-hand scale. Notice that the thresholds are separated by 10 to 12 dB. As expected, the performance of each stream is not as good as if that stream had been transmitted by itself, and the performance of all three is limited by the analog data that was added to the digital data. The weighted average SNR of the recovered analog information of the upper two levels is shown in the right-hand scale. Note that the two forms of data are nearly independent, since the phase and amplitude can be decoded separately. The added analog data has some effect on the BER, as does the channel noise.

Note that the thresholds for the three levels of quality are about 6, 17, and 29 dB, when transmitted at full resolution. When transmitting at the lowest resolution only, as for upconverted NTSC, simple 4-PSK is used and the threshold is about 3.2 dB. When transmitting the two lowest levels only, the thresholds are about 5.5 and 15.5 dB.

The dotted lines in Fig. 10 show the performance of both the digital and the analog transmissions in the presence of of echoes. The particular collection of echoes used was one of those used by ATTC in their recent tests of the all-digital systems—the one we judged to be most difficult. Comparison with the solid lines permits an assessment of the degradation of threshold caused by multipath. Note that the quantification of the relative performance of single- and multiple-carrier modulation systems in the presence of multipath is a question that has generated a certain amount of controversy. This measurement is the start of an attempt to answer that question in an empirical manner. The echo results are preliminary.

3) All-Digital Version: For changing this scheme to all-digital, while preserving the maximum similarity so as to enhance interoperability between the digital and hybrid versions, the coefficients need simply to be quantized with an appropriate number of bits/sample and then entropy-coded if desired. Spread spectrum can still be used so as to have two thresholds for the coefficients; the three thresholds for the data that is transmitted digitally in the hybrid version are unchanged. The main effect of using all-digital transmission is that the channel is used less effectively so that somewhat higher CNR is needed in an analog channel for the same picture quality. On the other hand, full digital representation may have some advantages, such as allowing the use of digital VCR's.

IV Conclusions

We have analyzed the performance factors of an advanced television system for terrestrial broadcasting in the US that are required to maximize its acceptability by the various stakeholders. The latter include regulators,

Table 2 Echo Ensembles Used by ATTC

Ensemble A

Path	Delay	Phase	Atten
1	0.00 μs	288 deg	20 dB
2	1.80 μs	180 deg	0 dB
3	1.95 μs	0 deg	20 dB
4	3.60 μs	72 deg	10 dB
5	7.50 μs	144 deg	14 dB
6	19.80 μs	216 deg	18 dB

Ensemble B

Path	Delay	Phase	Atten
1	0.00 μs	288 deg	20 dB
2	1.75 μs	180 deg	0 dB
3	1.947 μs	0 deg	20 dB
4	3.60 μs	72 deg	10 dB
5	7.50 μs	144 deg	14 dB
6	19.70 μs	216 deg	18 dB

Ensemble C

Path	Delay	Phase	Atten
1	0.00 μs	288 deg	18 dB
2	1.80 μs	180 deg	0 dB
3	1.95 μs	0 deg	20 dB
4	3.60 μs	72 deg	20 dB
5	7.50 μs	144 deg	10 dB
6	19.80 μs	216 deg	14 dB

Ensemble D

Path	Delay	Phase	Attn
1	0.00 μs	288 deg	20 dB
2	1.80 μs	180 deg	0 dB
3	1.95 μs	0 deg	20 dB
4	3.60 μs	72 deg	18 dB
5	7.50 μs	144 deg	14 dB
6	19.80 μs	216 deg	10 dB

Ensemble E

Path	Delay	Phase	Attn
1	0.00 μs	288 deg	20 dB
2	1.80 μs	180 deg	0 dB
3	1.95 μs	0 deg	14 dB
4	3.60 μs	72 deg	10 dB
5	7.50 μs	144 deg	20 dB
6	19.80 μs	216 deg	18 dB

Ensemble F

Path	Delay	Phase	Attn
1	0.00 μs	288 deg	0 dB
2	0.20 μs	180 deg	10 dB
3	1.90 μs	0 deg	14 dB
4	3.90 μs	72 deg	18 dB
5	8.20 μs	144 deg	20 dB
6	15.0 μs	216 deg	20 dB

Ensemble G

Path	Delay	Phase	Attn
1	0.00 μs	180 deg	19 dB
2	0.20 μs	0 deg	0 dB
3	0.28 μs	180 deg	22 dB
4	0.35 μs	180 deg	17 dB
5	0.50 μs	180 deg	22 dB
6	0.80 μs	180 deg	19 dB

These are the seven collections of echoes used in the ATTC tests of the all-digital systems. The Zenith system suffered about a 2.5 dB increase in threshold, averages over all seven collections. The test shown in Fig. 10 used only Collection D, which we judged to be the worst.

broadcasters, equipment manufacturers, program producers, and the viewing public. The factors that emerge as most important are spectrum efficiency, coverage versus quality, cost, interoperability, and the existence of an acceptable transition scenario. As a result of this analysis, we find that existing proposals do not meet all the requirements, and so we have proposed an alternative. The latter makes use of hybrid analog/digital transmission together with joint source and channel coding. It provides several levels of quality according to receiver cost and signal conditions and supports single-frequency operation. A simple receiver can be used for the lowest level of quality, and omnidirectional antennas can be used in most locations.

Appendix

Misconceptions about Digital Broadcasting

Digital processing has many well known advantages over analog processing. For this reason, digital signal processing is already widely used in the TV studio. Digital video tape recorders are now common and, of course, a digital signal representation is needed to utilize these machines. There is also no doubt that digital source coding is superior to analog source coding. For this reason, all the earlier proposed HDTV systems, including MUSE, which uses analog channel coding, use digital source coding. The real issue is whether *all-digital transmission* is required in order to achieve the high compression ratios made possible by digital source coding. The answer is no, as evidenced by the hybrid system described above in Section III-D. Hybrid transmission permits compression comparable to that attainable with digital transmission. At the same time, it permits better utilization of the transmission capacity of the terrestrial broadcasting channel, which, after all, is purely analog. This and other aspects of digital transmission are discussed in the following paragraphs.

A. Utilization of Channel Capacity

This is not an easy subject to address, since there are so many variables and so many differences in the functional characteristics of digital and analog systems. This discussion is, therefore, open to varying interpretations.

An analog HDTV video signal, such as that of the NHK "studio" system, has a bandwidth of about 32 MHz. To fit this within an analog 6-MHz channel requires a bandwidth compression ratio of 5.3. Narrow MUSE attains a ratio of

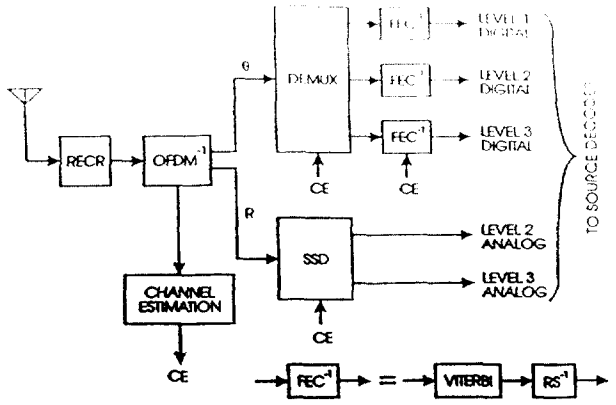

Fig. 9. ***Channel Decoder.*** **The decoder is the inverse of the encoder except for channel equalization. The frequency response of the channel is estimated continuously. The estimate is used in the digital demultiplexer, the error-correction modules, and the spread-spectrum demodulator. The recovered analog and digital data are fed to the source decoder to reconstruct the image.**

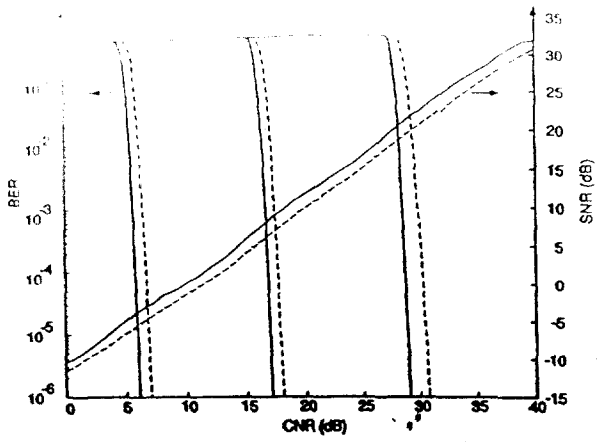

Fig. 10. ***Noise Performance, With, and Without Echoes.*** **Solid lines show the echo-free case while dotted lines show the performance in the presence of echoes from Collection D of Table 2. The BER, after error correction, is shown at the left for each of the three digital data streams, as a function of receiver CNR. The weighted average SNR of the recovered analog signals is shown at the right for the two higher levels. These echo results are preliminary.**

4:1 by reduction in diagonal resolution together with a kind of temporal interlace, the latter being made acceptable by motion-adaptive interpolation. The balance of the required compression ratio is achieved by reduction in vertical resolution to 750 lines. Digital systems of comparable picture and sound quality to that of Narrow MUSE, on the other hand, have an uncoded data rate of more than 600 Mb/s, and use about 17 Mb/s for coded video in the channel,[35] for a compression ratio of about 40. Since digital systems are designed to operate with a threshold CNR of about 16 dB, while Narrow MUSE needs about 40 dB, a valid comparison must use a digital channel coder reconfigured to have a threshold of 40 dB. That raises the transmission rate by a factor of 40/16, or 2.5. In that case, the digital source coder would need a compression factor of 16, rather than 40. This can be compared with the value of just 5.3, as needed by an analog system of about the same quality. This comparison between bandwidth compression in an analog system and data compression ratio in a digital system is valid because the noise on the uncompressed analog video has the same effect as channel noise in the kind of coding system used in Narrow MUSE. The ratio 16/5.3 is therefore a measure of the inefficiency of digital transmission in the analog channel. ***Thus digital transmission is less, not more, efficient than analog transmission in this case.*** Furthermore, at receiving points where the CNR threshold for digital transmission is exceeded, and where the analog system is capable of effective utilization of the additional channel capacity by producing better pictures, the performances of the two kinds of systems diverge even more. Finally, the analog system preserves usable service at CNR's that cause the all-digital schemes to fail entirely.

[35] For this example, we take a digital system of resolution 720 × 1280 × 60 fps progressively scanned, with the chrominance resolution set at half the luminance resolution in both directions. The compressed data rate is that of the AT&T/Zenith system. The inefficiency comes from many sources, including transmission at less than the Shannon rate, heavy error correction, more audio data, and, perhaps, a less efficient description of the fundamental image information.

B. Noise and Interference Rejection

It appears that journalists writing about the "digital revolution" have a vision of distinct ones and zeros (pulses and no pulses) traveling through a channel and being cleaned up by clipping out the noise after reception. Of course, this is not the case in broadcasting. In order to achieve a transmission rate anywhere near the theoretical capacity, large numbers of successive bits must be coded together, complex analog waveforms must be used to represent the blocks of data, and extensive error correction must be used.

Even some of those who do understand the technology persist in making the unqualified statement that digital transmission is more resistant to noise than is analog. This is misleading, since it is only true if the attempted transmission rate is far below the channel capacity. The quantization noise introduced by digital transmission is always larger than the noise that can readily be clipped out. For a valid comparison, the transmission rates of the digital and analog systems must be equal. It has never been proven, and probably is not true, that for a given transmission rate in a channel of given capacity, digital transmission is more resistant to noise than analog.[36]

Noise rejection by clipping[37] is confined to applications in which the transmission rate is well below the channel capacity. In proposed digital cable systems, many programs are to be transmitted on one wire at rates as close to the

[36] When we speak of the "transmission rate" of an analog signal, we must also give an error criterion. A good example would be the case discussed above where a comparison was made between Narrow MUSE and an all-digital system, in which the analog transmission in the noisy channel produced pictures of about the same quality as the digital transmission.

[37] This argument is not confined to simple hard-decision decoders. It applies equally to more sophisticated schemes in which, at the final decision level, a choice is made as to which message was most likely to have been sent, given the received signal and, perhaps, some knowledge of the channel characteristics.

channel capacity as practical and with good error correction. To use repeaters in that case, complete demodulation, decoding to a baseband digital data stream, and recoding would be required at every repeater, a procedure that would be impossibly expensive. In any event, the ability to regenerate digital signals many times in a long series of repeaters with simple reshaping and negligible effect on the BER, which might be applicable to some kinds of long-distance relaying applications, is not relevant to terrestrial broadcasting, where repeaters are not used.

C. Multipath Rejection

One does not see ghosts in digital television pictures, and perhaps this is the reason why some observers have come to believe that digital transmission suppresses ghosts. In fact, the presence of ghosts, even of rather small amplitude, raises the BER to such a degree that digital transmission becomes impossible. *Ghosts must first be removed in order to permit digital transmission at any useful rate.* This is done by some kind of equalization, as discussed in Section III-C. Ironically, should an analog channel be properly equalized, then analog transmission will give greatly improved picture quality. To some extent, this will be done with the "ghost eliminators" that have been developed for NTSC [37].

Acknowledgment

Although this work was supported for the most part by Scitex America, Inc., some MIT funds were also contributed by Prof. Jonathan Allen, Director of the Research Laboratory of Electronics. Graduate students Susie J. Wee and Michael O. Polley did the simulations and also gave material assistance in evolving the the system described in Section III-D and in preparing this paper. Deborah Manning carefully edited the drafts. Valuable comments were made by reviewers, both formal and informal. The errors remaining and the opinions expressed are those of the author alone.

References

[1] E. D. Petajan, "Grand alliance television system," this issue.

[2] M. L. Dertouzos *et al.*, *Made in America.* New York: Harper, 1990.

[3] C. E. Shannon and W. Weaver, *The Mathematical Theory of Communication.* Urbana, IL: Univ. Illinois Press, 1963, pp. 67 and 100; T. M. Cover *et al.*, *Elements of Information Theory.* New York: Wiley, 1991.

[4] S. U. H. Qureshi, "Adaptive equalization," *Proc. IEEE*, vol. PROC-71, pp. 1349–1387, Sept. 1985.

[5] *Digicipher HDTV System Description.* San Diego, CA: General Instrument Corp., 1991.

[6] W. F. Schreiber, "Advanced television systems and their impact on the existing television broadcasting service," submitted to the FCC, MM docket no. 87-286, Nov. 1987, doc. 3, sec. 3.2.

[7] W. R. Neuman, "The mass audience looks at HDTV: An early experiment," in *Nat. Assoc. Broadcast.*, Las Vegas, NV, Apr. 1988.

[8] N. K. Lodge, "The picture quality implications of low bit-rate terrestrial television," in *IEE Colloq. on Develop. in Terrestrial Broadcast. for the UHF Band*, London, Jan. 1992.

[9] O. Bendov, "The effect of channel assignment on transmitter and receiver requirements for equivalent HDTV/NTSC coverage," in *NAB*, Las Vegas, NV, 1994.

[10] Testimony of M. Lebhold of Apple Computer before the House Subcommittee on Tech., Environment, and Aviation, June 1993; J. Sculley, Chairman and CEO, Apple Computer, Nat. Assoc. Broadcast., Las Vegas, Apr. 1993; Computer Syst. Policy Project, letter to J. Quello, May 1993.

[11] T. M. Cover, "Broadcast channels," *IEEE Trans. Inform. Theory*, vol. IT-8, p. 2014, 1972.

[12] "Coding of audio, picture, multimedia, and hypermedia information," ISO/IEC cd 13818-2, Dec. 1993, Sec. 7.7–7.9; K. Joseph *et al.*, "MPEG++: A robust compression and transport system for digital HDTV," *Image Commun.*, vol. 4, nos. 4–5, pp. 307–323, Aug. 1992.

[13] W. R. Neuman, private commun.

[14] A. N. Netravali *et al.*, *Digital Pictures.* New York: Plenum, 1988, pp. 497; K. Knowlton, "Progressive transmission of gray-scale and binary pictures by simple, efficient, and lossless encoding schemes," *Proc. IEEE*, vol. PROC-68, pp. 885–896, July 1980.

[15] P. J. Burt *et al.*, "The Laplacian pyramid as a compact image code," *IEEE Trans. Commun.*, vol. COM-31, pp. 532–540, 1983; G. Morrison *et al.*, "A spatially layered hierarchical approach to video coding, signal processing," *Image Communication.* New York: Elsevier, 1993, pp. 445–462.

[16] M. Isnardi *et al.*, "A single-channel compatible widescreen EDTV system," 3rd HDTV Colloquium, Canadian Dept. Commun., Ottawa, 1987.

[17] P. G. M. deBot, "Multiresolution transmission over the AWGN channel," Philips Labs., Eindhoven, The Netherlands, June 1992.

[18] "Description of the COFDM System," CCETT, Groupement D'Intéret Economique, Cesson Sevigné, France, 1990; M. Alard and R. Lasalle, "Principles of modulation and channel coding for digital broadcasting to mobile receivers," *EBU Rev.-Tech.*, Aug. 1987, pp. 168–190; P. J. Tourtier *et al.*, "Multicarrier modem for digital HDTV terrestrial broadcasting, signal processing," in *Image Communication.* Amsterdam: Elsevier, vol. 5, 1993, pp. 379–403.

[19] D. Parsons, *The Mobile Radio Propagation Channel.* New York: Wiley, chap. 8.

[20] F. Ferri *et al.*, "Performance analysis of OFDM systems for terrestrial HDTV broadcasting," and M. Kuhn, "The single frequency network of Deutsche Bundepost—Telekom," presented at *Int. Workshop on HDTV*, Torino, Italy, Oct. 1994.

[21] S. A. Lery *et al.*, "Extending HDTV coverage using low power repeaters: A cellular approach," *IEEE Trans. Broadcast.*, vol. 38, pp. 145–150, Sept. 1992.

[22] S. B. Weinstein and P. M. Ebert, "Data transmission by frequency multiplexing using the discrete Fourier transform," *IEEE Trans. Commun.*, vol. COM-19, pp. 628–634, Oct. 1971; B. Hirosaki, "An orthogonally multiplexed QAM system using the discrete Fourier transform," *IEEE Trans. Commun.*, vol. COM-29, pp. 982–989, July 1981.

[23] D. Pommier *et al.*, "A hybrid satellite/terrestrial approach for digital audio broadcast with mobile and portable receivers," in *Proc. NAB Eng. Conf.*, 1990, pp. 304–312.

[24] B. LeFloch, "Orthogonal frequency division multiplex," this issue.

[25] J. N. Ratzel, "The Discrete representation of spatially continuous Images," Sc.D. dissertation, MIT, EECS Dept., 1980; W. F. Schreiber and D. E. Troxel, "Transformation between continuous and discrete representations of images: A perceptual approach," *IEEE Trans. Patt. Anal. and Mach. Intell.*, vol. PAMI-7, pp. 178–186, Feb. 1985.

[26] E. A. Krause, "Motion estimation for frame rate conversion," Ph.D. dissertation, MIT, EECS Dept., 1987; D. M. Martinez, "Model-based motion estimation and its application to restoration and interpolation of motion pictures," Ph.D. dissertation, MIT, EECS Dept., 1986.

[27] G. D. Forney, *Concatenated Codes.* Cambridge, MA: MIT Press, 1966.

[28] A. G. Mason *et al.*, "Digital terrestrial television development in spectre project," IBC, 1992; A. G. Mason *et al.*, "A rugged and flexible digital modulation scheme for terrestrial high definition television," *NAB*, 1992.

[29] M. L. Moher and J. H. Lodge, "A time diversity modulation strategy for the satellite-mobile channel," in *Proc. 13th Biennial Symp. Commun.* Queen's Univ., Kingston, Canada, June 1986; P. Hoeher, "A statistical discrete time model for the

WSSUS multipath channel," *IEEE Trans. Vehic. Tech.*, Mar. 1991.
[30] A. J. Viterbi, "Error bounds for convolutional codes and an asymptomatically optimum decoding alogrithm," *IEEE Trans. Inf. Theory*, vol. IT-13, Apr. 1967, pp. 260–269; G. D. Forney, Jr., "The Viterbi algorithm," in *Proc. IEEE*, vol. PROC-61, pp. 268–278, Mar. 1973.
[31] "Test results, grand alliance transmission subsystem," Techn. Subgroup, FCC, ACATS, Jan./Feb. 1994.
[32] T. G. Stockham, Jr., T. M. Cannon, and R. B. Ingebretsen, "Blind deconvolution through digital signal processing," *Proc. IEEE*, vol. PROC-63, pp. 678–692, Apr. 1975.
[33] op. cit, [4].
[34] J. Nicolas *et al.*, "On the performance of multicarrier modulation in a broadcast multipath environment," to appear in *Proc. ICASSP-94*.
[35] W. F. Schreiber *et al.*, "Channel compatible 6-MHz HDTV distribution systems," *SMPTE J.*, pp. 5–13, Jan. 1989.
[36] W. F. Schreiber, "Source and channel coding of advanced TV in the US: Achieving high spectrum efficiency in terrestrial broadcasting," *Münchner Kreis*, Nov. 1993.
[37] "Proposal for ghost cancelling system for NTSC TV," N.A. Philips Labs, May 1991.
[38] H. Hamazumi *et al.*, "Hierarchical TV transmission by spread-spectrum multiplexing," *SMPTE J.*, vol. 103, no. 12, pp. 811–816, Dec. 1994.
[39] W. F. Schreiber, "Spread-spectrum television broadcasting," *SMPTE J.*, vol. 101, no. 8, pp. 538–549, Aug. 1992.
[40] J. J. Nicolas, "Investigation of coding and equalization for the digital HDTV terrestrial broadcast channel," Ph.D. dissertation, EECS Dept., MIT, Cambridge, MA, Sept. 1994. Also Tech. Rep. 585, Res. Lab. of Electron., MIT.

BIBLIOGRAPHY

[1] W. F. Schreiber, "Considerations in the design of HDTV systems for terrestrial broadcasting," *SMPTE J.*, vol. 100, no. 9, pp. 668–677, Sept. 1991.
[2] ——, "All-digital HDTV terrestrial broadcasting in the US: Some problems and possible solutions," in *Symp. Int.—Europe-USA*, ENST, Paris, May 1991.
[3] ——, "Advanced television in the United States," Europe. Commission Rep., July 1993.
[4] T. Naveen and J. W. Woods, "Motion compensated multiresolution transmission of high definition video," *IEEE Trans. Circ. and Syst. for Video Tech.*, vol. 4, pp. 29–41, Feb. 1994.
[5] R. Hopkins, "Progress on HDTV broadcasting standards in the United States," in *Signal Processing Image Communication*, vol. 5, New York: Elsevier, 1993, pp. 355–378.

William F. Schreiber (Fellow, IEEE) received the B.S. and M.S. degrees in electrical engineering from Columbia University. He received the Ph.D. in applied physics from Harvard University in 1953, where he was a Gordon McKay and Charles Coffin fellow.

Dr. Schreiber worked at Sylvania from 1947 to 1949 and at Technicolor Corporation in Hollywood, CA, from 1953 to 1959. From 1959 to 1990, he was a faculty member at MIT, where he is now Professor Emeritus of Electrical Engineering. He was Director of the Advanced Television Research Program from 1983 until his retirement. He was a Visiting Professor of Electrical Engineering at The Indian Institute of Technology, Kanpur, India, during 1964–1966, at INRS-Telecommunications, Montreal, Quebec, during 1981–1982 and 1991–1993, and at the Swiss Federal Institute of Technology, Lausanne, in 1990. He has been interested in image processing since 1948, and has worked in graphic arts, including color processing and laser scanner design, in facsimile, and in television. This work has included theory and extensive practical applications.

Dr. Schreiber is a member of the Technical Association for the Graphic Arts (TAGA), SPIE, and the National Academy of Engineering. He is a fellow of SMPTE. He has received the Honors Award of TAGA, the David Sarnoff Gold Medal from SMPTE, the Gold Medal of the International Society for Optical Engineering (SPIE), and is a four-time recipient of the Journal Award of SMPTE.