Progressive scan raises costs for broadcasters.
The cost of the I-to-P converter that is required when the source material is in I form will be a negligible part of the total cost of shifting to multiplex digital transmission. If broadcasters become convinced that there is money to be made in SDTV digital transmission, they will make the investment. If they are not convinced, the small cost of the converter will not enter into their decision.

No one knows how to make progressive-scan cameras with high SNR.
Since excellent cameras have been demonstrated in Japan for the 525-line P format, one would think that this canard would have disappeared. There was never any question at all about the SNR of P cameras except at the HDTV level

Many programs that will be used for SDTV transmission exist in NTSC format.
Although it may seem odd to go from I to P at the TV transmitter and then go from P to I at the receiver, the total cost and quality loss that will be encountered will be small. NTSC video always has rather low vertical resolution. Even 360-line P transmission is sufficient to do justice to an NTSC signal. If we fail to think about the future, we shall be stuck for decades with a digital system that retains many of the inherent analog NTSC limitations and defects. When will there be a better chance to change to a superior system than now?

Transcoding
A key issue is the cost and quality of transcoding, which must be widely used in any TV broadcasting system. Format conversion is so much a part of TV -- todays's and tomorrow's -- that it must be considered in system design. No one can disagree with the statement that transcoding is easier and more successful from a P format than from an I format. The basic reason is that, if the frame rate is the same, no temporal interpolation is required. Note that, even after decades of experience, NTSC<->PAL conversion is far from perfect.

Conclusion
There is not a single compelling reason to use interlace in any new TV system. Interlace does not conserve bandwidth, improve SNR, or provide any substantial economy. On the contrary, it will retain all the interlace artifacts now present in NTSC and prevent high-quality transcoding. That means, of course, that the spectrum allocated to television broadcasting will not be used with maximum possible efficiency.

If we permit interlaced transmission, progressive transmission will be driven out just as bad money drives out good money under Gresham's Law, and we shall forever have poorer quality for the same data rate than we would have had with progressive. We shall not have another opportunity to shift to a substantially better system for many decades than we have right now. Now is the time to make this change.

Some More Thoughts About Interlace

One would have thought that everything that might be said about this subject had already been said. However, after the Advanced Digital Video conference organized by NIST in Washington May 10-11, it seems that we are not quite finished.

The Grand Alliance proposes to transmit a number of different formats including 1080 (active) lines x 1920 interlaced and 720 x 1280 progressive scan. (proscan) Film will be 1080 lines progressive at 24 fps. It seems that the main reason for including all these formats is that no GA participant was willing to give up his favorite format. This admittedly raises the receiver cost. The GA members have agreed to make all receivers accept all formats. Of course, they do not have the power to do enforce this, and the FCC is most unlikely to do any kind of receiver regulation. Whether the FCC will even prove willing to mandate the special film format remains to be seen.

Another reason that appeared in news reports was that there was strong sentiment for having more than 1000 lines, thus the change from 960 interlaced (which was the ATRC format) to 1080. Everyone pays lip service to the idea that proscan is better and so there is a migration plan to go to 1080 proscan eventually. Of course, 1080 lines interlaced will not give higher vertical resolution than 720 progressive. The attempt to do so will make the interlaced receiver have so much interline flicker as to be unwatchable. There apparently still are some who don't believe this, but it is nevertheless true and easily demonstrated.

The failure to understand the vertical resolution implications of interlace extends to the testing process itself. The first round of testing used a BTS 720-line proscan camera that was not very good. Later, a clever scan converter was developed that made improved 720-line proscan material from 1125/60 interlaced. Since the output of the converter has to be worse that its input, and has to have a vertical resolution substantially below that of the input, the proscan systems were put at an immediate disadvantage that will remain until a good 720-line proscan camara appears. This is because the proscan systems themselves undoubtedly have a higher vertical resolution that the video from the 1125/60 interlaced camera.) This extra resolution is going to waste in the tests. Note that the two proscan systems did much better than the interlaced systems for computer-generated material.

I find that I have developed a certain amount of paranoia after spending 10 years on HDTV. Readers may think that this is the reason why I am suspicious of the choice, since 1080 active lines makes the 1125/60 system the production standard once again. Some of the same people who tried so hard to make 1125/60 the international production and program-interchange standard are still at it. Another item along these lines is that both Ikegami and Matsushita had offered to build 720-line proscan cameras for the US system proponents for about $1 million, but withdrew their offers. It is rumoured that they did so under pressure, both Japanese and American. At the NIST meeting, Matsushita demonstrated an excellent 525-line proscan camera. If a 525-line camera can be made, I would be willing to bet that a 720-line camera can also be made.

My Assumptions

I regard the following as facts, but since everyone does not agree, I shall call them assumptions. On an interlaced display, if there is a substantial difference between adjacent lines in a frame (which lines, of course, are in different fields and displaced in time by 1/60 sec) interline flicker at 30 Hz will appear. If the adjacent lines are identical, they must be resolved by the eye to see the flicker. If adjacent lines are different, the larger the differing area, the greater the distance at which the interline flicker is visible. An extreme case is one in which the odd lines are white and the even lines are black — a legitimate although very unusual NTSC picture. This flickers at 30 Hz and is visible even from a distance at which the entire display seems to be a point source.

The computer industry has abandoned interlace because of the severe flicker caused by display of computer-generated alphnumerics and graphics. At recent SMPTE conventions, there have been about as many computer monitors on the floor as TV displays. One would have to be blind not to notice that the TVs were shimmering away while the computer displays were nice and quiet.

For many years in my MIT laboratory, we had a 512-line interlaced display operating from a frame store connected to our computer. Many of the pictures in the system were from a high-resolution laser scanner, and flickered wildly in detailed areas. Many highly experienced TV professionals saw this and usually thought that the monitor was faulty. Later we made a side-by-side comparison of interlace and proscan of the same image — the back of a dollar bill — and showed it to executive and engineering personnel from ABC, CBS, NBC, Tektronix, Ampex, and others. None had even seen it before and were generally astonished. The reason for this is that video from interlaced cameras is inherently of low vertical resolution. In tube cameras, it is because the entire target is discharged in 1/60 sec. (If it were not, that would lead to other problems, such as serrated vertical edges of horizontally moving objects.) CCD cameras usually discharge two lines at a time when in interlace mode.

As a result of this situation, most TV professionals have never seen the very large interline flicker that invariably results when full vertical resolution is present in the video. They are therefore improperly calibrated at to what picture quality to expect with a certain number of lines, and generally do not realize that the lack of flicker means that the resolution must be much less than the number of lines per frame. I believe that this accounts for the mistaken notion that 1080 lines interlaced has a higher vertical resolution than 720 lines proscan.

One rarely gets to see resolution charts during HDTV demos, but I have seen some. It is worth noting that current 1125/60 cameras have a *limiting* vertical resolution of not much more than 700 lines. In addition, interline flicker is never seen in demos of the 1125/60 interlaced system, whereas some interline flicker is seen in NTSC. I conclude, therefore, that the vertical resolution of the HDTV cameras is lower, with respect to 1125, than that of 525-line cameras is to 525. Another piece of evidence comes from a demo at the old CBS laboratories in Stamford, Conn. They had an 1125/60 system that they had modified so that it could be operated at 562 lines progressive. When switched to proscan, the resolution did not decline noticeably. All that happened was that the line structure became more visible

A final incident that can be added to the mountain of evidence that already exists comes from a tour of European TV laboratories that I made in 1985. All of them were showing 625-line video (PAL) upconverted to 625-line proscan or 1250 line interlace. My comment in every case was that the upconverted images, while they looked quite nice, were softer than the originals. We had the same result in our own audience testing facility when the viewers unexpectedly preferred NTSC interlaced over the images on a Hitachi upconverter. The moral of the story is this: If the picture flickers on the interlaced display, it can be improved by upconversion, but not otherwise. If the interlaced picture does not flicker, then upconversion cannot make much of an improvement, and the need for interpolation is likely to reduce the sharpness.

The Consequences of Permitting an Interlaced Format

If the FCC approves the use of the 1080-line interlaced format as one of the many formats to be transmitted when HDTV broadcasting starts up, then I predict that we shall not have proscan for the forseeable future. The 1080-line format will become the dominant format and eventually the only one used. It is conceivable that this eventuality might be forstalled if the FCC were willing to establish some receiver standards, but I think that it is most unlikely to do so. If the FCC showed a desire to go that route, then I believe that Congress would give them the authority to do so if they felt that they did not already have such authority.

The horizontal deflection circuitry of a TV receiver is costly relative to other circuitry, since higher power is required. The power and cost go up as the scan rate increases. Generally, therefore, interlaced receivers are cheaper to manufacture and will have lower prices. Furthermore, to prevent interline flicker on these sets, the video will have to be limited in vertical resolution. This will happen automatically with video from interlaced cameras, but will have to be done deliberately with telecine- and computer-generated material, of which we can expect more and more as time goes by.

Presumably, receivers that accept more than one format will do so by scan converting to their display format, which is likely to be fixed. Scan conversion is probably cheaper than using a multisync monitor. The 1080-line interlaced receiver (the cheapest) will therefore waste all the extra vertical resolution provided by 1080-line proscan for movies and 720-line proscan that may be used by some broadcasters. That, however is not the worst result. Lower performance for a lower price is to be expected. The worst result is that the attempt to introduce even higher resolution such as 1080 proscan, will find a population of cheaper receivers that will flicker markedly with such material. If the 1080 proscan has to be filtered down so as not to flicker on 1080 interlaced receivers, then there is no point at all in making the transition, and we shall be stuck with interlace forever. In other words, we shall have introduced an unsolvable reverse-compatibility problem by permitting any interlaced broadcasting. This would defeat the FCC's expressed desire for nondisruptive improvability over time.

The Interoperability Argument

Progressive scan and square pixels are the minimum demands of the non-TV imaging interests whose lobbying pushed the FCC into making interoperability a subject of study by the Advisory

Committee on Advanced Television. (ACATS) The focus of this study has, unfortunately, gotten diverted into the question of choosing a packet transmission format suitable for use on general-purpose digital communication networks. Of course, if there are going to be a number of formats transmitted, then the signals must identify themselves, and there is nothing wrong with headers and descriptors to serve that purpose. However, the main difficulties that will be encountered in transcoding from the broadcast format to something suitable for a computer display relate much more to the fundamental scanning parameters rather than to a good packet structure. Even the question as to whether a transmission is digital or analog is much less important than whether the formats are progressive or interlaced.

The main reason for the difficulty in transcoding between NTSC and PAL, for example, is that a high degree of temporal aliasing is almost always present. (For the kind of motion routinely seen in TV, even hundreds of frames/sec would not be enough to eliminate temporal aliasing without introducing an unacceptable degree of blurring.) If not for this, the sampling theorem and some appropriate low-pass filters would suffice. As it is, with aliasing present, any temporal filtering is likely to produce defects such as multiple images or excessive blurring.

In principle, it is possible to design a coding system that is independent of the sampling grid and that could be displayed on any grid at all with a quality that depended only on the resolution offered by the grid. Such is the case with contour coding of typographical characters as in the Postscript page-description language. However, TV coding has not gone that route, and I suspect that hardly anybody wants to discard MPEG at this point and go back to the drawing board. With progressive scan, temporal filtering is not needed for most transcoding. With respect to film, we have all gotten used to the defects of 3/2 pulldown and are prepared to live with it until motion-compensated interpolation becomes practical.

What to Do?

At the recent NIST meeting, I suggested that it might be possible to avoid the reverse compatibility problem presented by a population of interlaced receivers by labelling receivers as to scan format and by requiring all transmissions, in whatever format, to be of full vertical resolution. This would minimize direct regulation of receivers, but, indirectly, would require interlaced receivers to incorporate vertical low-pass filters. I thought this would have been a reasonable compromise, since it still permits broadcasters to use the 1080-line interlaced format. The proposal met with no positive response. I have concluded, therefore, that we should simply forbid broadcasting of interlaced HDTV images. This type of decision is certainly within the FCC's standard-setting prerogatives, and there is ample precedent for making this kind of rule. I intend to push for this solution in whatever forums are open to me, and I urge others to do the same.

The interlace/progressive argument would be much clearer if there were suitable demos that showed that proscan gave better results at the same data rate as interlace. There are many partial demos, including a paper from Eric Petajan of Bell Laboratories distributed at the NIST meeting. This paper showed that when an original proscan sequence was converted to interlace by discarding every other line in every other frame, and that when both versions were coded to the *same* data rate, the proscan sequence (which had twice the uncoded data rate) looked *better*. This

indicates that there is *no* penalty in transmission rate for using proscan.

I still cannot understand why companies that have a financial interest in the outcome are not willing to spend the money required to do more along this line.

William F. Schreiber 26 May 1994

Interlace

Aside from the compatibility question, there is no more troublesome aspect of TV system design than whether to use interlace or progressive scanning. Not only is there widespread misunderstanding of the technical aspects of interlace, even among TV professionals, there are political and economic considerations that have further confused the situation.

Interlace is widely misunderstood, even by TV professionals. The computer industry has abandoned it because of intolerable interline flicker on computer monitors. The TV industry is much less bothered by this because TV cameras characteristically have low vertical resolution. Discussion on the issue is confounded in part because most TV personnel believe that interlace is an effective way to halve the bandwidth requirement. Another complicating factor is the wish of companies that make 1125/60 equipment to have this equipment used as is for HDTV production.

The ATTC Test Results

After the ATTC tests, there was a heated discussion, partly by e-mail, about the desirability of using interlace in the new ATV system. A meeting on this subject was held in Chatham, Mass. in May, 1993. The pro-interlace group includes personnel of the Sarnoff Laboratory, Sony, and NHK as well as Rennville McCann, consultant to CBS. The anti-interlace group includes virtually all representatives of computer companies, who are influenced primarily by interoperability considerations. It is conceded by everyone that progressive scan is superior from the standpoint of interoperability, but the interlace advocates think that that is not their problem and, since progressive scan takes twice the bandwidth, that it is not practical.

C. K. P. Clarke of the BBC Research Department has done a study indicating that progressive scanning has an important role to play in future systems. [BBC RD 1987/18] A very important conclusion he reached was that the primary advantage of interlace was a reduction in the visibility of line structure (he compared 625 lines interlaced with 312.5 lines progressive) but that both systems could render about the same spatiotemporal spectrum of video information.

Unfortunately, nearly everyone involved in the discussion is an employee of a company with a vested interest in the outcome. For example, the Japanese evidently still hope that 1125/60 will be the *de facto* production standard, so that their existing lines of equipment will dominate the professional market from the start. The computer companies' interests are likewise obvious. They are interested mainly in interoperability.

In the ATTC tests, the two interlaced systems had slightly higher subjective quality than the two progressive systems, except on a computer-generated sequence in which the scores were reversed. The progressive proponents claim that the trouble was that the progressive camera that they used was inferior to the Sony interlaced camera, which may well be true.

Involving as it does perceptual considerations, camera and display technology (now and in the future), possible effects on compression ratio, and in the absence of definitive tests, it is very difficult to present an analysis that is both convincing and unbiased. I shall try.

How Interlace Works

The primary advantages usually associated with interlace (Clarke's conclusions, above, are quite novel) can be thought of from two different points of view. For a given bandwidth, interlace, if it works perfectly, either doubles the vertical resolution or it doubles the large-area flicker rate, depending on the scan parameters. In fact, in neither of these effects does it work very well except at very low display brightness. Long ago, Brown [E. F. Brown, Bell System Tech. J. 46,1, 199-232, 1967] found that these hoped-for factors of 2 depended on brightness and were only about 1.1 at typical display brightness. In addition, interlaced displays are subject to interline flicker and produce quite noticeable aliasing in the presence of movement. Why then has interlace been used for so long? Why has it been abandoned for computer displays?

Interline flicker is not very troublesome in today's TV primarily because interlaced cameras, both tube and solid state, have very poor vertical resolution due to the fact that the integration time per sample is one field time and not one frame time.[1] Thus the light input to two adjacent scan lines in the camera is averaged, causing vertical blur. If the video information actually has full vertical resolution as limited only by the number of lines/frame, then interline flicker occurs in all detailed areas of the image. The scan lines do not have to be resolved either by the eye or the CRT for this flicker to be visible. As long as the *horizontal* extent of the detail on adjacent lines is both visible and different, interline flicker occurs at the frame rate. Typical pictures from a laser scanner, for example, flicker unacceptably when displayed on an interlaced monitor. An extreme example is a picture with alternate black and white lines. *The vast majority of TV people have never seen this effect.* During a period when my MIT laboratory had a Sony contract, I showed this to dozens of Sony engineers, none of whom had seen the effect previously. (They genrally thought that there was something wrong with the monitor.) We later had a demonstration of the effect using a laser-scanned image of a dollar bill, displayed both interlaced and progressive. We showed it to hundreds of visitors, and it was a surprise to every one, without exception.

Another flaw in much of the analysis is the assumption that the vertical resolution of a camera depends primarily on the beam diameter and is independent of the scan format. [T. G. Schut, "Resolution Measurements in Camera Tubes," J.SMPTE, 92, 12, 1270-1293, 1983] The equilibrium discharge of a camera target is a nonlinear process; the effective spot size and shape depend on the local image intensity and the corresponding amount of charge. Except at very high brightness, as the beam moves down the camera target, discharge is primarily effected by the leading and lower edges of the beam. A given camera typically will have substantially higher vertical resolution with progressive scanning than it has with interlace. The limiting vertical frequency response, (which can, of course, be less for inferior tubes) for images of full dynamic range, is simply the number of scan lines per *field*. This reduces the resolution when interlace is used, and this is why we see little interline flicker in NTSC and PAL.

A point often made by interlace enthusiasts is that progressive displays are only better because they have twice the bandwidth. They also state that a progressive camera with the same

[1]This "defect" of interlaced cameras actually is essential to make the pictures at all acceptable. If the integration time at each sample point were one full frame rather than one field, then objects in horizontal motion would show serrated vertical edges.

resolution as an interlaced camera is much less sensitive because it has twice the bandwidth and therefore more noise. By resolution, they mean the number of samples/frame, the progressive camera having twice the bandwidth.

Of course, cameras must be compared at the same bandwidth. I believe that the proper comparison would be between two cameras with the same number of scan lines/frame and the same vertical scan frequency. The progressive camera would use quincunx sampling preceded by a diamond-shaped spatial filter, so that both signals would have the same sample rate and bandwidth. (The interlaced signal could be derived from the same camera if alternate lines on alternate fields were discarded after processing by a diamond-shaped spatiotemporal filter. This would reduce the vertical-temporal aliasing commonly seen today.) The sensitivities would now be much closer. Recall that the fundamental limitation on camera sensitivity is the number of photons per picture element. Two systems that use different scan patterns but have the same picture-element rate have the same limiting sensitivity.

I think it reasonable to assume that, in the future, cameras will improve with respect to vertical resolution. There certainly will be much more use of computer-generated imagery, which does not have the limitations caused by camera physics. In view of the better interoperability of progressively scanned systems and because of the absence of the interlace artifacts referred to above, I think progressive scan is the clear choice for future systems.

wfs July 1993

G

Comparison Between Interlaced and Progressive Scanning Formats

Prof. P. Delogne*

1 Background

The advent of digital television has reopened the debate about scanning formats, which seemed to be definitely closed since the early times of television. Interlaced scanning was first requestioned in the early development of compression techniques. For instance, it appeared to be a major source of problems for the development of hierarchical coding schemes[1] during the RACE/HIVITS project. Shortly after this, some consideration was given to this issue in the development of the MPEG-2 standard as well as in work carried out in the related ITU/CMTT-2 rapporteur's group on secondary distribution of TV/HDTV. Whereas it is fair to recognize that MPEG-2 slightly opened the door to progressive formats, it is clear that none of these projects took the risk of fundamentally requestioning the well established position of interlaced scanning.

In early 1994, in the frame of debates carried out by the FCC about the adoption of a digital television system for the United States, the american association of cinematographers took a very strong position in favour of progressive scanning. After recalling that the interlaced scanning format used for television is a considerable source of artefacts which would not exist with a progressive format, and that about 70 per cent of the picture material broadcast by television operators originate from unscanned films, the cinematographers conclusions were quite clear, though a bit abrupt : it would be stupid to adopt interlaced scanning for a digital TV broadcasting standard.

About at the same time, the Image Project Line (PL4) of the european RACE programme had initiated a debate on the interlaced/progressive issue, with however a different basic motivation, i.e. the convergence of the computer/multimedia and broadcasting industries. At present these business areas exclusively use the progressive format and the interlaced format respectively. Convergence toward a unique format seems unavoidable in the long term. PL4 decided to prepare a recommendation addressed to the outside world, to draw the attention on the problem and to recommend some realistic orientations for the near future. The adoption of the recommendation was somewhat delayed by a rather conservative reaction from some company in the broadcasting consumer electronics area. It nevertheless came out. Subsequently the HAMLET project was asked to undertake additional studies to clarify some remaining uncertainties. Several papers in this session

*Laboratoire de Télécommunications et Télédétection. Université Catholique de Louvain, Louvain-la-Neuve, Belgium

[1]Hierarchical coding, upward-downward or HDTV/TV compatibility, multiresolution analysis, spatial scalability, frequency scalability are roughly equivalent terms to describe attempts to include the description of a lower-definition picture in the compressed bitstream

will present results of this investigation. The present paper has been prepared as a general introduction to the topic of scanning formats.

2 Scanning as a sampling operation

The scanning system used by television systems analyzes moving pictures as a sequence of images called *frames* which are furthermore read line by line. The most obvious scanning system is the *progressive* one illustrated on figure 1, which describes an analysis with 50 frames/s and 576 active lines per picture height H. Progressive scanning actually corresponds to a two-dimensional sampling operation described by an orthogonal sampling grid in the (y, t) plane, as shown on the figure.

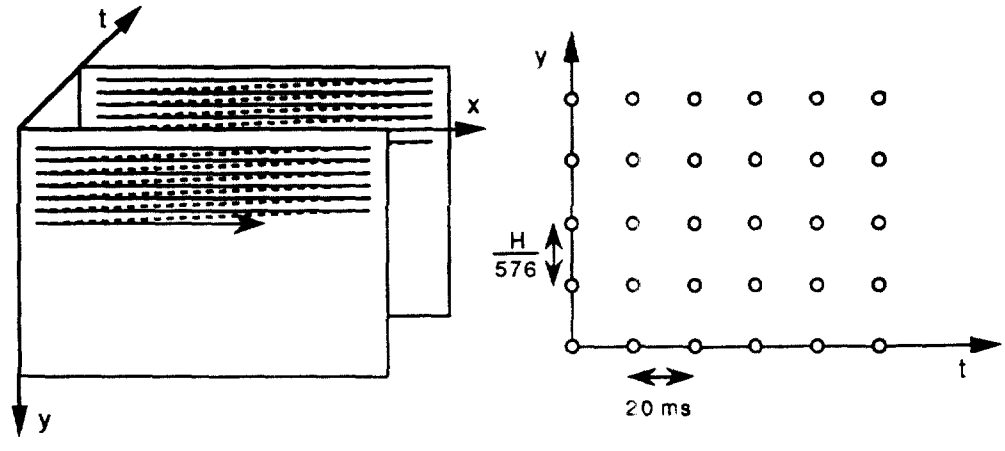

Figure 1: Progressive scanning system.

For reasons of bandwidth saving and of limitation of flickering effects, existing television systems use 2:1 *interlaced* scanning, whereby each frame is analyzed in two *fields* : odd fields contain odd lines and even fields contain even lines. Figure 2 illustrates the European standard with 25 frames/s and 576 active lines/frame. The corresponding sampling grid is now a quincunx as shown.

Of course, in digital television systems, the signal is also sampled in the horizontal direction, i.e. along the lines. The sampling pattern in the (x, y) plane is most frequently orthogonal.

The theory of multi-dimensional sampling is somewhat more complex than for the one-dimensional case [1]. The spectrum of the analog signal is here aliased at the nodes of the conjugate network. If we denote by $\overline{v}_i$ the base vectors defining the structure of the sampling network in the (x, y, t) space, the conjugate network is defined by base vectors $\overline{u}_j$ of the (f_x, f_y, f_t) space, such that $\overline{u}_j \cdot \overline{v}_i = \delta_{ij}$. Figure 3 illustrates the conjugate networks for progressive and interlaced scanning in the (f_t, f_y) plane. The peculiarities of multi-dimensional sampling as related to television scanning merit some comments. It should first be noted that, contrary to one-dimensional sampling, the aliasfree baseband is not uniquely defined. The baseband illustrated by the continuous-line rectangle on the left-hand side of figure 3 seems logical, but it is not the only possible choice. As a matter of fact, for a given conjugate network there is an infinite number of possible alias free

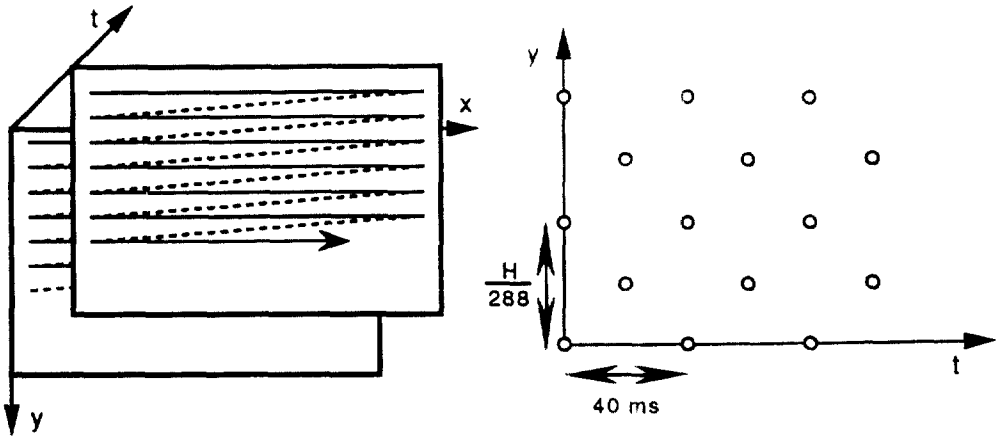

Figure 2: Interlaced scanning system.

basebands, even under the constraint of a maximum area for this bandwidth. This can easily be understood by comparing the aliased spectra with the visible part of tiles on a roof: given the network of tiles centers, there is an infinite number of possible shapes to assume complete coverage. The right-hand part of figure 3 illustrates three possible bandwidths for interlaced scanning.

In principle it is necessary to avoid aliasing effects by presampling filters. This means that a spatio-temporal filter should be placed ahead of the scanning system. The technical means to do this are extremely poor. It is possible to obtain some spatial lowpass filtering by defocusing the optical system in front of the camera. This adjustment is made experimentally so as to obtain the best subjective picture quality, representing a compromize between loss of resolution and aliasing effects. The camera spot remanence similarly performs some temporal lowpass filtering. It is clear that the spatio-temporal spectrum of television pictures is not very well defined and that complex spectrum shapes such as some ones shown on figure 3 represent purely theoretical concepts. The only sound statement in this regard is that the baseband spectrum is vaguely rectangularly shaped by the camera system. Image sequences currently exhibit considerable temporal aliasing.

Similarly, reconstruction filters are needed to eliminate the aliased spectra in the display process. The technical means available for this purpose, i.e. defocusing the display spot and increasing the spot remanence, are again very poor. Actually the human visual system, acting as a lowpass spatio-temporal filter, will play the main role in reconstruction filtering.

3 Psycho-visual effects

The human perception of pictures displayed on a screen depends on a number of external factors, among which the viewing distance, the screen brightness and the background lighting.

The eye roughly acts as a spatial lowpass filter, with some cutoff frequency expressed in cycles/degree. The main effect of the viewing distance is in the conversion from these

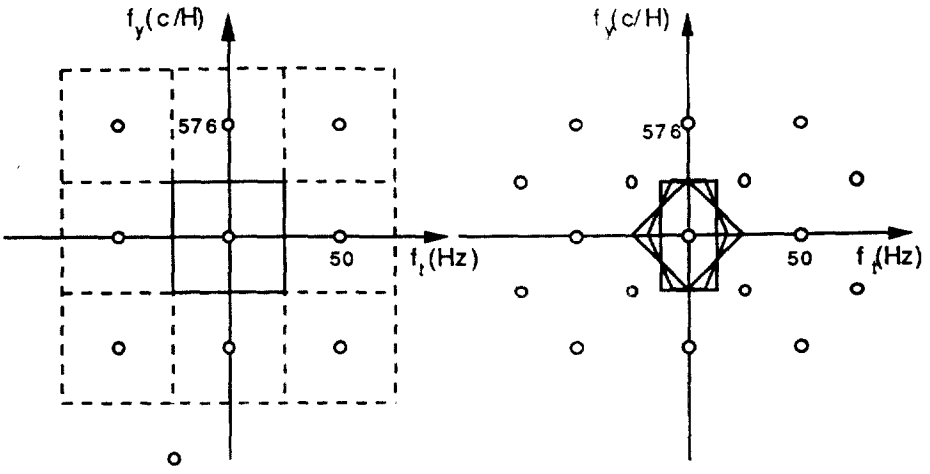

Figure 3: Conjugate network in the (f_t, f_y) plane for progressive (left-hand side) and interlaced (right-hand side) scanning.

cycles/degree to the cycles/picture height in which spatial frequencies are currently expressed. The eye cutoff frequency is not uniform, being maximum in the foval area.

The human visual system also acts as a temporal lowpass filter. This phenomenon involves different layers in the global process, ranging from purely perceptual effects such as retinal persistence to interpretation by the human brain. It is almost sure that the brain cannot interpret more than a few different full pictures/second, but it can concentrate on some fast changing details (e.g. a tennis ball). One can dream about a television system which would capture only a few frames/s and would include, at some place in the global link, an effective temporal interpolation system so as to eliminate any purely perceptual impairment. One has to find the right frontier between dream and realism for such approaches. The dream assumes that the interpolation system can be as intelligent as the human brain. Realism dictates to take into account economically achievable pseudo-intelligent temporal interpolation techniques. For the time being, this probably does not go beyond the use of motion compensation without any picture content interpretation. Nevertheless, temporal interpolation (including its simplest implementations, such a the triple projection of each picture made in the cinema technique) has to be considered nowadays as an intrinsic part of the viewing problematic.

The artefacts resulting from scanning are essentially due to the poor characteristics of the antialiasing and reconstruction filters, as explained above. Interpolation can be used to compensate for insufficient reconstruction filters, i.e. to decrease the visibility of repeated spectra. It is of no use to eliminate aliasing errors due to insufficient filtering occurring ahead of scanning itself : this kind of error can be called *irreducible* . Artefacts related to scanning can easily be understood using spectral representations such as those of figure 3.

A preliminary remark should be made about the latter. The areas of the possible baseband for progressive versus interlaced scanning are in a ratio of two. It is not fair to

make comparisons in these conditions. It is obvious that 50 Hz progressive scanning (P50) offers twice the possible temporal resolution of interlaced scanning, which transmits only 25 frames/s. Comparison with 25 Hz progressive (P25) is more reasonable. The latter is also interesting, in view of its relation to cinema.

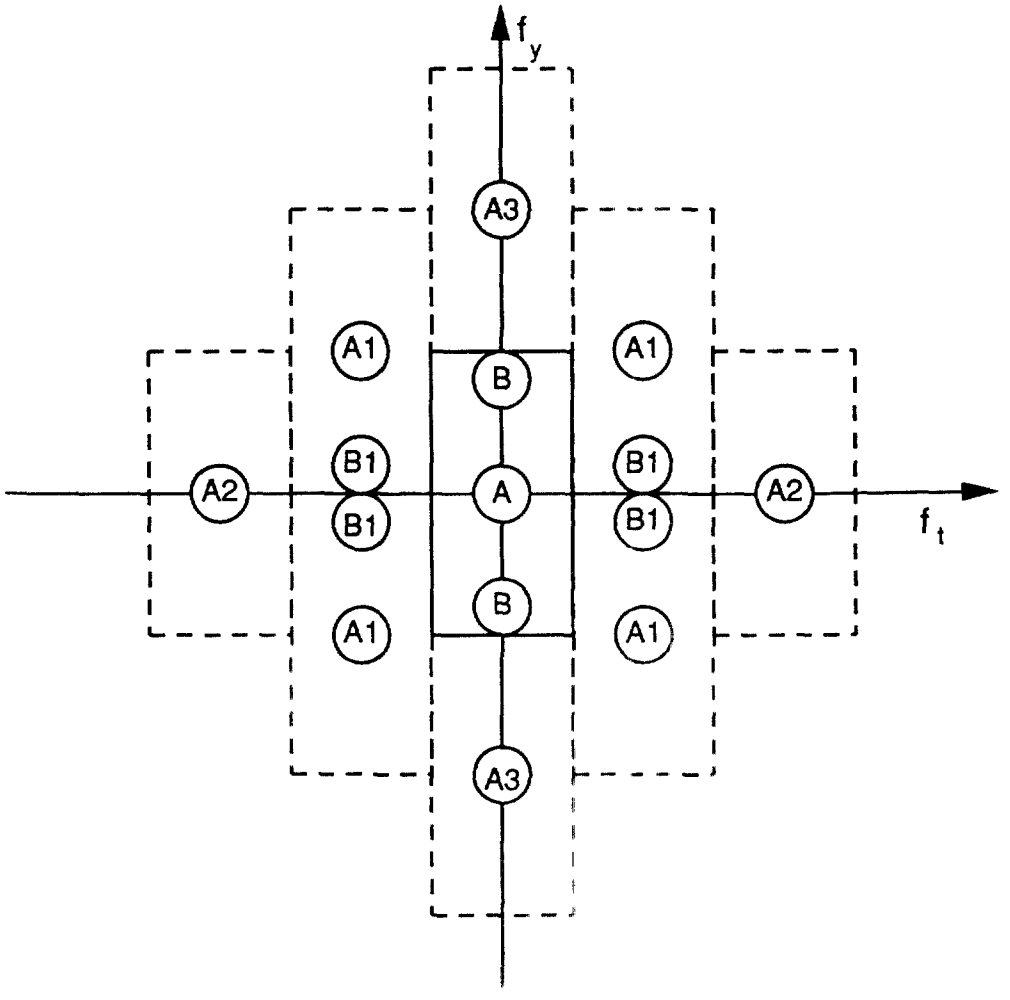

Figure 4: Aliasing effect for interlaced scanning.

Whatever the case, the well known artefacts of interlaced scanning are essentially due to the quincunx structure of the repeated spectra, which causes frequencies of the baseband to be aliased closer to the origin of the (f_y, f_t) plane than for progressive scanning. Figure 4 can be used for this purpose. The following types of artefacts can occur :

1. Some frequencies present in the scene and located somewhere between A1 and B1 are mapped between A and B because of insufficient filtering ahead of the scanning process. This is the source of irreducible errors, such as wheels turning in the wrong direction, etc. P25 is not better than interlaced in this regard. Obviously, such effects are less likely for P50.

2. Another type of irreducible error is B1 being mapped to B. This area B1 corresponds to large-area luminance variations at 25 Hz, such as due to electroluminescent tube

lighting. Interlaced scanning is here better than P25, for which B1 is mapped to A, where the eye sensitivity is maximum. The corresponding problem for P50 is A2 being mapped to A, but this is less critical.

3. At the display side, the generally quite energetic area A being aliased in A1 is the cause of interline flicker and crenelated diagonal moving edges, which are major impairments of interlaced scanning. They can only be reduced by increasing the viewing distance. With P25, A would be aliased in B1 (large area flickering at 25 Hz) : this is obviously not acceptable and some temporal interpolation is absolutely needed. This problem is solved by projecting each picture three times in the cinema technique. For P50, the area A is aliased in A2 (large area flickering at 50 Hz) as it also is for interlaced : this is just acceptable and is being improved in recent techniques such as 100 Hz TV.

4. Area B corresponding to high-detail in the picture is repeated in B1 and causes large area flickering at 25 Hz. This is one of the major weaknesses of interlaced scanning in the absence of any temporal interpolation. Historically, it has been the reason why the vertical spatial resolution is reduced by a factor $K \approx 0.7$ below the maximum achievable resolution (288 c/H, i.e. 576 lines). K is known as the Kell factor.

Globally, interlaced scanning suffers from a number of weaknesses due on the one hand to some irreducible aliasing errors and, on the other hand, to the difficulty of applying temporal interpolation techniques to this format to improve reconstruction filtering. It is currently admitted that the viewing distance for the interlaced format must be about twice larger than for P50 to achieve the same visual quality. Some people assert that P50 would be nearly as good as interlaced HDTV. As far as P25 is concerned, this format probably offers enough intrinsic temporal resolution for a very large class of picture material, as cinema as shown since a long time, but it cannot be displayed without some temporal interpolation. It is certainly a good candidate for the broadcasting of films, for which it has the appropriate frame rate.

4 Capture and display devices

The question of scanning formats cannot be discussed without devoting some consideration to the characteristics of capture and display devices and of their possible evolution.

Traditional cameras use a tube as the capture device, but CCD cameras are now available. Both can be used for progressive as well as interlaced scanning. The main problem with tubes is their relatively poor signal-to-noise ratio for progressive scanning as compared to interlaced. The difference is considerably reduced for CCD cameras, as shown on Table 1. This table was taken from [2] and shows figures for HDTV 1125 lines cameras. A difference is made between the nominal SNR and the effective SNR in camera operation, the latter taking into account the amplifier noise and line processing performed in the camera. In this table, "progressive" means P50. The gap between interlaced and progressive will further be reduced with new CCD techniques such as M-FIT CCD.

Image Device	Tube		CCD	
Scanning system	Interlace	Progressive	Interlace	Progressive
Signal bandwidth (MHz)	30	60	30	60
Nominal SNR (dB)	47	38	around 50	41-47
Effective SNR (dB)	34-38	25-29	37-40	29-37

Table 1: Effective SNR estimate of 1125 lines HDTV camera

Regarding displays, the development of HDTV is a driving force in research on alternatives to the classical cathode ray tube (CRT), also for TV display. New promising systems such as the *Active Matrix LCTV*, the *Digital Micromirror Device* and *Plasma Display Panel* present interesting behaviors for interlaced and progressive scanning formats as well. Some of these are intrinsically based on progressive scanning, the display of interlaced pictures requiring additional manipulations. It is likely that these new technologies will lead to consumer products in a relatively near future.

To conclude, it appears that capture and display devices are probably not among the most important obstacles to an evolution toward the use of progressive scanning.

5 Signal processing aspects

Various types of signal processing operations need to be performed in a digital TV chain. The acceptable degree of complexity is certainly not the same for operations performed in studios and in the user terminal, but this gap is now reduced with the advent of VLSIs for consumer products.

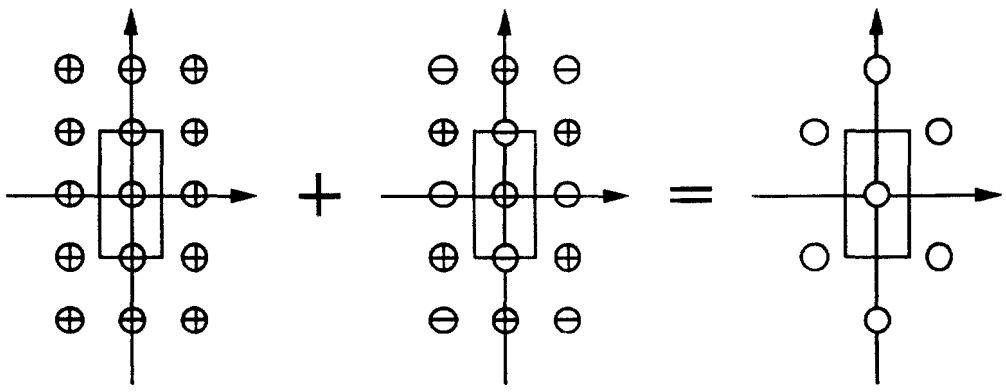

Figure 5: The spectrum of an interlaced signal as the sum of spectra of even and odd field sequences.

Before looking at various signal processing operations, we would like to recall an alternative view of interlaced scanning, as this can give some insight on basic difficulties of signal processing for this format. The spectral properties of interlaced scanning shown on figure 3 can be understood at the light of figure 5. An interlaced signal can be considered as the sum of two progressively scanned pictures, i.e. of the sequences of even fields and

of odd fields. As can be observed on figure 2, the latter can be considered as due to two progressive scanning systems with half the number of lines, but with different sampling phases. The sampling phases result in plus and minus signs affecting the aliased spectra, half of which disappear in the summation. The quincunx repetition of spectra for interlaced scanning result from this quasi magic property. The merit of this presentation is to make clear that nearly any classical signal processing operation performed inside a field or even on a sequence of fields with the same parity would be theoretically illegal, because it operates on a signal which has been sampled at half the Nyquist rate in the vertical direction. Interlaced scanning is a considerable source of difficulties for picture processing, including for coding, because spatial and temporal operations are no longer independent.

5.1 Spatial filtering

This is one of the most current operations, which has to be performed in a lot of more complex processes (see below). We are here concerned with the vertical direction. There is no difficulty for filtering progressively scanned pictures, since it is perfectly justified to apply a spatial digital filter operating inside frames. With interlaced scanning however this is a theoretically illegal operation. In principle, spatial filtering in the vertical direction now requires to operate on several fields. A satisfactory way of proceeding has been found [3, 4], but it practically involves the use of a quite complex deinterlacer (see below). This may not be acceptable from the cost point of view in many applications, since several field memories would be needed. In practice, intra-field filtering is sometimes used, but this should be done with much care, taking into account the summing properties illustrated on figure 5.

5.2 Temporal interpolation - Motion estimation/compensation

Temporal interpolation is required in a number of processes. The classical technique for interpolation is to insert zeroes and lowpass filter the result. This method is nearly never used for the temporal interpolation of TV signals, even with progressive scanning, as this would need to operate on a rather large number of frames. A much more efficient technique is to use motion information for interpolating between two successive frames. Using three frames can provide better results in areas being covered or discovered by the motion of foreground objects.

With progressively scanned signals, there is no fundamental difficulty in the motion estimation, even with sub-pel accuracy, as well as for the interpolation itself. With interlaced scanning, estimating motion between two fields, either with the same parity or with opposite parities, frequently provide erroneous motion vectors. This is not surprising since vertical sampling at half the Nyquist rate provides fields which contain only 50 per cent of the information. This is true for full-pel and sub-pel accuracy as well. Again, the right way of proceeding is known [3, 4], but it is quite complex.

5.3 Interlacing - deinterlacing

Interlacing is generally not a complex operation. Conversion from P50 to interlaced is elementary. High-quality conversion from P25 to interlaced supposes temporal interpolation and can be done with moderate complexity. A very cheap alternative is to merely use the odd/even lines of a P25 frame as the odd/even fields of the interlaced format. This is actually what is done for telecinema, and the result is not so bad.

Deinterlacing is much more complex. Producing P50 or P25 by mere vertical interpolation inside fields is a theoretically illegal operation. It may yield more or less acceptable results only for pictures shot with a rather low Kell factor. For higher-quality pictures, it is necessary to resort to techniques using motion information. Satisfactory solutions have been found [3, 4], but they are quite complex and should probably be reserved to professional studios. The utilization of such complex techniques at the receiver side does not seem realistic today.

5.4 Still picture, slow motion, chroma key

These operations are currently performed in studios, but they are of interest also for consumer equipment (e.g. recorders) and in multimedia production.

Still picture. If the picture to be displayed in still-mode is progressive, this process is automatic and reduces to an editing problem. If the incoming signal is interlaced an interpolation is logically needed. The quality of the deinterlacing algorithm is in this case more critical because artefacts are actually clearer than what can appear in motion.

Slow Motion. Slow motion can be regarded as a conversion to a higher frame rate. Conventionally in the interlaced world, slow motion replay has been achieved by simple field repetition. This process gives rise to undesirable jerky motion effects. To overcome these problems high-quality slow motion algorithms recently projected are all based on a high-quality deinterlacer, specifically projected or adapted to this purpose. Typically the whole process is a cascade of such deinterlacer followed by a temporal interpolation, where the number of intermediate interpolated pictures depends on the desired target frame-rate. The deinterlacer step is obviously skipped for a progressive input.

Chroma-keying. Digital chroma-keying is intended to replace the historical analog process based on the use of the blue component to separate elements from a scene. Basically good performances in isolating objects from an image to overlap it on another are achievable only through good region and contour detection, surely easier in progressive scanned picture than in blurred (since field-merged) interlaced picture. Within the researches currently under development progressive reference material is always considered.

5.5 Frame-rate conversion

This conversion can be used at both transmitter and receiver sides. It primarily concerns conversions between :

1. 50Hz/59.94Hz/60Hz : compatibility between European, Japanese and American standards.

2. 50Hz/100Hz : this is a means to improve video domestic quality still using an interlaced TV screen. Due to this advantage it has already found a place in the market with pure repetition of fields. Some upgrades to these elementary algorithms, making use of motion estimation are already available. This new solution is provided by the cascade of a deinterlacer, a temporal interpolator and a reinterlacer, in order to obtain an interlaced 100Hz sequence where only every fourth picture is an original. The complexity of the algorithm presently fits better with studio or broadcasting application.

3. 50Hz/72Hz : workstations and PC monitors often work at the frequency of 72 Hz because these displays are viewed from a much closer distance than a TV set and so a higher fame rate is considered necessary to eliminate any visible flicker. In the framework of windows containing video, this conversion problem copes with interoperability between digital television and multimedia.

5.6 Aspect Ratio Conversion

Aspect ratio conversion can be needed both at the transmitter and receiver sides. Typically, it concerns the conversion between 4/3 and 16/9 formats. Probably digital television will start in 16/9, so the problem of compatibility with 4/3 material is real. The re-sampling is essentially a filtering problem (pure horizontal, pure vertical or mixed), where above considerations on vertical filter and scanning format are valid. Progressive scanning would undoubtedly make things much easier.

5.7 Coding and multiresolution analysis

By lack of place, and also because recent research results are reported in other papers of this workshop, we will restrict ourself to a few general remarks :

- Intra-coding is based on the DCT, used as the decorrelation operator. The latter should be a spectral analysis tool, according to Cramèr-Loève's theorem. It is undoubtedly a quite efficient operator when applied to a progressive format. For an interlaced format, one may have to choose between field-DCT and frame-DCT (i.e. after merging two fields). Field-DCT has reduced reduced efficiency because it is applied to a sequence sampled at half the Nyquist rate in the vertical direction, i.e. exhibiting aliasing ; lack of efficiency comes from the fact that extra bits are needed to encode aliased frequency components. Frame-DCT uses extra bits to encode a mixture of spatial information and motion effects which is not exploited usefully.

- Motion compensation is the main ingredient of inter-coding. It suffers from a number of weaknesses for interlaced pictures. Interfield motion estimation and compensation cannot be very efficient, even for full-pel accuracy, because it is applied to sequences sampled at half the Nyquist rate in the vertical direction. Sub-pel accuracy involves vertical interpolations which are illegal from a theoretical point of view. Interframe motion estimation and compensation applied after field merging attempts to find motion between two pictures which actually have no physical existence in moving areas. The coding efficiency of motion compensation is therefore significantly lower for interlaced pictures than for progressive ones.

- A major drawback of motion estimation and compensation performed on interlaced formats is that it provides motion vectors which do not necessarily correspond to actual motion. Their usefulness for format conversions which could be performed at the receiver end for improving visual quality is therefore limited.

- Multiresolution analysis (i.e. scalability) in a coding scheme would offer some advantages, e.g. for TV/HDTV compatibility of for fast modes in recorders. It cannot easily be included in the coding process for interlaced scanning, where it requires additional features from the algorithm and requires extra bits at the output. The basic reason for this is the existence of vertical aliasing inside fields, which makes

difficult the lowpass filtering operation necessary to define a lower-definition format. Scalability can be solved in quite elegant ways for progressive formats.

6 The present and the future

Interlaced scanning has been a magnificent idea to save bandwidth in a consumer oriented service at a time where signal processing technologies were nearly inexistent. The foregoing analysis however puts in evidence that it creates more problems than it solves in a digital environment, where rather complex signal processing are part of the landscape.

The very few advantages that interlaced scanning can offer for display purposes (actually these advantages are only sensible for a fixed line rate in the display device) should not weight much at a time where PCs costing about 1,000 USD and including displays with a spatial resolution equivalent to, or even better than HDTV are part of the consumer industry world. The computer world has not been constrained by some technological constraints belonging to the past ; it absolutely ignores interlaced scanning ! Convergence of the broadcasting, telecom and computer industries is part of the present landscape.

The move of the broadcasting world from interlaced to progressive scanning is unavoidable in the medium/long term. It is however strongly slowed down by the massive dominance of the interlaced format both in studio and consumer equipments. This situation should be recognized as factual and should be duly taken into account.

The advent of digital TV offers a unique opportunity to escape from the constraints and limitations related to interlaced scanning. We are here faced with a classical fight between conservatism and progressism. The basic choice is about where to put the emphasis in new developments. It is also a choice between paying a moderate amount now and paying much more in the future.

While taking interlaced scanning as the main line of thoughts and accepting the related increase of coding/decoding complexity as an intrinsic part of the base layer, MPEG-2 opened a door to progressive formats. This door is narrow since, whereas 25P is indeed part of the main profile at main level (MP@ML) option, 50P was "evacuated" to the very expensive MP@H-14 HDTV level. In Europe the DVB group has adopted MPEG-2 at MP@ML as the main option and does not seem to push for a better statute for 50P. It is the author's opinion that these choices are fundamentally erroneous. Excessively sticking to the interlaced format will limit the added value of digitalization for the broadcasting industry and it will be a source of increased costs for the user in a medium/long term. The end result may well be a greater attraction of telecom distributed services compared to classical broadcasting.

Apparently, more promising solutions are considered in the US and in Japan. Several progressive formats have already been chosen for the introduction of the new digital HD television in the U.S. [5]. In Japan, the launching of a new standard called EDTV-II (*Enhanced Digital TeleVision*) will also make use of a progressive format (480x720, 59.94 Hz) [6]. Let us hope that, after having been leading in the development of digital techniques for image communications, Europe will not have made wrong strategic choices in a crucial step of the process.

References

[1] R.M. Mersereau and T.C. Speake, *The Processing of Periodically Sampled Multidimensional Signals*, IEEE Trans. on Acoustics, Speech and Signal Processing, vol. ASSP-31, No 1, February 1983.

[2] S. Pigeon and P. Guillotel, *Advantages and drawbacks of interlaced scanning formats*, Project RACE 2110 HAMLET, Deliverable R2110/WP2/DS/R/004/b1, 1995.

[3] P. Delogne, L. Cuvelier, B. Maison, B. Van Caillie and L. Vandendorpe, "Improved Interpolation, Motion Estimation and Compensation for Interlaced Pictures", *IEEE Transactions on Image Processing*, Vol. 3, No. 5, September 1994, pp. 482-491.

[4] L. Vandendorpe, L. Cuvelier, B. Maison, P. Queluz and P. Delogne, "Motion Compensated Conversion from Interlaced to Progressive Formats", *Signal Processing : Image Communication*, Vol. 6, No. 3, June 1994, pp.193-211.

[5] C. Basile et al., "The U.S. HDTV Standard. The Grand Alliance", Special Report on Digital TV, IEEE Spectrum, April 1995

[6] Y. Ninomiya, "The Japanese Scene", Special Report on Digital TV, IEEE Spectrum, April 1995

ANDREWS OFFICE PRODUCTS CAPITOL HEIGHTS, MD (K)

H

Advanced Television Systems for Terrestrial Broadcasting: Some Problems and Some Proposed Solutions

WILLIAM F. SCHREIBER, FELLOW, IEEE

Invited Paper

The first part of this paper discusses the requirements that must be met by a new television broadcasting system to maximize its acceptability to the various stakeholders, including broadcasters, equipment manufacturers, program producers, regulatory authorities, and viewers. The most important performance factors are efficient use of over-the-air spectrum, coverage versus quality, cost, interoperability, and the existence of a practical transition scenario. It is concluded that all receivers need not have the same performance, and that low-cost receivers must be available for noncritical locations in the home. If this variation in price and performance is made possible by appropriate system design, then interoperability is facilitated and nondisruptive improvement over time is made possible, as desired by the Federal Communications Commission.

In the second part of the paper, techniques that may permit meeting these requirements are discussed. These include joint multiresolution source and channel coding, multicarrier modulation, and hybrid analog/digital coding and transmission. The analog transform coefficients are subjected to spread-spectrum processing, and coded orthogonal frequency-division multiplex (COFDM) is applied to the complex hybrid symbols to be transmitted through the channel. Various methods of equalization and of improving noise, interference, and multipath rejection are compared. Finally, an example is given of a system that meets the various requirements by making use of a number of the techniques discussed. The system provides extended coverage, albeit at lower quality than currently proposed all-digital systems, and equal or higher quality than such systems in much of their service area. It also features self-optimization at each receiver, depending on signal quality and receiver characteristics, and facilitates the design of receivers of lower cost and performance for less-critical applications.

I. Introduction

Since the proposal by General Instrument Corporation (GI) in 1990 for all-digital terrestrial broadcasting of high-definition television (HDTV), remarkable enthusiasm has developed in many quarters for what is, in reality, a truly radical departure from current practice. Digital technology, of course, had been widely accepted in many fields, including television post-production and video recording. Digital compression had been the subject of an international standardization process for several years under the aegis of JPEG and MPEG. The most notable features of the GI proposal were the degree of compression employed and the use of digital transmission technology. All of the earlier HDTV proposals, without exception, had made use of digital signal processing at encoder and decoder and had used some degree of digital compression. None, however, had used digital transmission. That technique, to the best of the author's knowledge, is currently employed in no terrestrial broadcasting system except for JTIDS, a US military system based on spread spectrum. The main applications of digital transmission are currently in wired point-to-point systems and in satellite communications. In those media, channel impairments are much less severe and receiver CNR[1] is much more uniform than found in terrestrial broadcasting. There, noise, interference, and multipath are particularly troublesome, and CNR varies enormously over the population of receivers.

For these and other reasons, many in the TV industry had thought that all-digital systems were very far in the future. Digital proposals had often been viewed as roundabout efforts to delay HDTV. Likewise, it had been the generally held (but incorrect) view that *any* amount of compression would be unacceptable because of loss of quality.

This being the case, it is natural to wonder what was the primary motivation for using digital transmission. A number of reasons were often given—better utilization of channel capacity, suppression of multipath effects, and higher resistance to noise and interference. Among those in the computer community who have been pressing for easy interoperability between the TV broadcasting format and

Manuscript received July 1, 1994; revised December 22, 1994. This work was supported in part by Scitex America, Inc.

The author is with The Research Laboratory of Electronics, Massachusetts Institute of Technology, Cambridge, MA 02139 USA

IEEE Log Number 9410562.

[1] In this paper, CNR is used for the signal-to-noise ratio at the receiver terminals and SNR is used when referring to the recovered video.

formats useful for displaying video on computer screens, it is often averred that digital transmission enhances interoperability. *All of these reasons are fallacious*

As both system proponents and the Advisory Committee on Advanced Television Systems (ACATS)[2] personnel got more deeply into the details of the all-digital proposals, the first three alleged advantages were heard less and less. The interoperability argument, however, is still voiced. Since this issue is central to the subject matter of this paper, it is dealt with in some detail in Section III-A-3. The other matters are considered briefly in the Appendix. What we shall see is that digital transmission generally makes less efficient use of channel capacity than analog or hybrid analog/digital transmission. However, the very high compression ratio (50–80) achieved by the currently proposed HDTV systems reduces the data rate sufficiently so that coded HDTV signals can be transmitted at a gross data rate of 20–25 Mb/s, which, under the right conditions, can be transmitted in the usual 6-MHz channel. The real question is whether all-digital transmission is *required* in order to attain the required high levels of compression in the source coder. As we shall show later, hybrid transmission also permits effective compression.

In the earlier American TV standardization processes (1941 and 1953), a vigorous consumer-electronics industry spearheaded by RCA did the development work and the Federal Communications Commission (FCC) adopted, for the most part, the transmission format recommended by the industry. However, by the time the formal HDTV standards-setting process started in 1987, the US consumer-electronics industry had been decimated and proposals for federal funding were subsequently rejected. Thus the various development projects have been grossly underfunded and all competitors have worked under unrealistically short time schedules.[3] As a result, even though the development work has been of remarkably high quality, many issues were not given sufficient study. In particular, not enough attention was directed toward the characteristics that an entirely new TV system ought to have. Equally important, very little attention was given to coding methods for the terrestrial channel until after GI made its proposal. To this date, work on channel coding in the US remains far behind that in Europe. These topics are the main subject of this paper.

When speaking of "currently proposed" HDTV systems, we are referring to the Grand Alliance (GA) scheme, [1] which is a melding of the four all-digital systems that were tested by the Advanced Television Test Center (ATTC). Many of the features of the "ideal" system discussed below are intended to deal specifically with aspects of the GA system that the author feels are questionable for terrestrial broadcasting.

[2] ACATS was appointed by the FCC in 1987 to conduct the inquiry that is leading to the promulgation of HDTV terrestrial broadcasting standards

[3] It is not clear that the tight schedules have produced a quicker result. The reverse may be true, since the optimistic schedules have never been met. In addition, the intensity at which the work was carried out (one team worked on Christmas Day!) precluded much consideration of alternative technologies

This paper is primarily addressed to HDTV in the US. The situation in Europe is quite different, for a number of reasons. In Europe, as compared with the US, government entities play a much larger role, the domestic consumer-electronics industry is much stronger, cable is less widespread and evidently of higher technical quality, and satellite broadcasting is further advanced. Many fewer terrestrial channels are available to each viewer, and a considerable investment was made in HD-MAC, a failed system. There has been almost no controversy over interlace, as the path to digital broadcasting seems to have been laid out in the expectation of very few changes in the studio. Digital television of standard definition is the evident current intention of cable and satellite interests in the US. In Europe, this also seems to be the case. In both areas, those planning digital services are all saying something about eventually going to HDTV, but ensuring that the first digital receivers can still function seems not to be getting much attention.

Many of the issues addressed in this paper involve political or economic considerations as well as technical matters. Therefore, the analysis cannot be entirely objective, nor can it always be quantitative. New television systems can no more be designed completely on a quantitative basis than can automobiles. Qualitative analysis, for example on the question of the best use of spectrum, is the only way to deal with some very important matters. It should be clear from the context which statements in the paper are the author's opinion and which are based on quantitative analysis.

II. Problems of Television Broadcasting

A. Performance Factors in Terrestrial Broadcasting

On the reasonable assumption that good solutions are most likely to be found when the problems are most completely and accurately defined, we shall now set forth the desirable properties of an entirely new TV system. Note that this is a much more difficult task than that encountered in typical new product development. A TV system must not only produce profits for a company; it must serve the public interest for many years to come and it must be acceptable to the many stakeholders—broadcasters, program producers, equipment manufacturers, and the viewing public. In the case of HDTV, an even wider constituency has emerged with the increasing use of video in other fields such as the computer industry and military equipment, and the often-expressed desire for interoperability among the various applications.[4]

1) Spectrum Efficiency: Standing at the head of any list of desirable attributes of a terrestrial broadcasting system is the effective use of radio spectrum. A useful figure of

[4] This paper does not concern itself with issues, real as they are, such as the importance of electronic imaging to the economic security of the US, and the possibility that an entirely new development such as HDTV might be a way for the country to revive its moribund consumer electronics industry.