**SCHEDULE IV-B**
**HIGHLIGHTS -- OTHER SYSTEMS AND PROPOSALS**
PAGE 1 OF 5

1. Location of system _____

2. Status/type of system (check as applicable):

   a. one of ten largest (subscribers) _____

   b. one of the five most recently constructed, i.e., substantially completed or upgraded _____

   c. awarded and in preconstruction _____

   d. under construction _____

   e. proposal outstanding _____

3. Name of local operating company _____

4. Year of purchase (if applicable) _____

5. Term of franchise _____

6. Commencement/expiration dates of franchise _____

7. Responsible governmental Official(s):

   Name: _____

   Title: _____

   Address: _____

   Telephone: _____

8. Present ownership of the Company or Cable Affiliate _____

9. Provide the name(s) of each person or entity involved in the ownership and the name(s) of each person or entity principally responsible for operation of the system, together with the nature and amount of the ownership and the nature of the operational responsibility of each such person or entity.

10. Current subscribers:

    Total number _____

    Number that subscribe to one or more pay service or higher tiers _____

11. Number of households passed to date _____

12. Penetration rate to date _____

13. Projected number of subscribers at completion:

    Total number _____

    Number that subscribe to one or more pay services or higher tiers _____

14. Estimated penetration rate at completion _____

15. Average monthly subscriber service revenue per subscriber -- currently and as estimated at completion _____

16. Total revenue from non-residential subscriber related services currently and as estimated at completion _____

17. Type of construction (new or rebuilding) _____

18. Estimated number of total street miles _____

19. Estimated number of total plant miles:

| | |
|---|---|
| Underground | _____ |
| Through conduit space | _____ |
| Aerial | _____ |
| Other | _____ |
| Total | _____ |

20. Date of start of construction _____

21. Average number of plant miles of construction completed per month _____

22. Number of plant miles completed to date _____

23. Forecasted date for completion of construction _____

24. Total cost to date of construction, equipment and subscriber devices _____

25. Estimated total cost of construction, equipment and subscriber devices _____

26. Describe how construction has proceeded in relationship to the original schedule agreed upon with the franchisor. Is construction significantly behind or ahead of that schedule? Explain.

27. Describe the principal technical features of the system, including, but not limited to: (1) numbers and highest frequency of cables, (2) interconnection features, (3) subdistricting features, (4) two-way/interactive capability, (5) emergency broadcast system capability features, (6) standby power, (7) converter usage (addressable, nonaddressable and cable-ready receivers), and (8) compliance with compatibility requirements.

28. List all residential subscriber, institutional, business, and other services offered and the rates charged currently for those services.

29. Describe the extent and nature of access services and facilities and leased channel policies including: (1) the number, type and rates (if any) for access and leased channels, and (2) the nature of access facilities (studios, mobile units, etc.) provided by the franchisee.

30. Describe the nature of any "institutional network" participation or provision in other systems.

**SCHEDULE IV-D**

**ACTUAL AND ANTICIPATED OUTLAYS - SYSTEMS COMPLETED, AWARDED OR UNDER CONSTRUCTION**

(Dollars In Thousands)



Actual Capital Outlays

| Cable System (Identify) | | 1991 | 1992 | 1993 | 1994 | 1995 | 1996 |
|---|---|---|---|---|---|---|---|
| | Outlays | | | | | | |
| | Miles | | | | | | |
| | Outlays | | | | | | |
| | Miles | | | | | | |
| | Outlays | | | | | | |
| | Miles | | | | | | |
| | Outlays | | | | | | |
| | Miles | | | | | | |
| | Outlays | | | | | | |
| | Miles | | | | | | |
| | Outlays | | | | | | |
| | Miles | | | | | | |
| Total Outlays | | $_____ | $_____ | $_____ | $_____ | $_____ | $_____ |
| Total Miles | | $_____ | $_____ | $_____ | $_____ | $_____ | $_____ |

**SCHEDULE IV-D**
**ACTUAL AND ANTICIPATED OUTLAYS - SYSTEMS COMPLETED, AWARDED OR UNDER CONSTRUCTION**
(Dollars In Thousands)


Anticipated Capital Outlays

| Cable System (Identify) | | 1997 | 1998 | 1999 | 2000 | 2001 | 2002 | 2003 | 2004 | 2005 |
|---|---|---|---|---|---|---|---|---|---|---|
| | Outlays | | | | | | | | | |
| | Miles | | | | | | | | | |
| | Outlays | | | | | | | | | |
| | Miles | | | | | | | | | |
| | Outlays | | | | | | | | | |
| | Miles | | | | | | | | | |
| | Outlays | | | | | | | | | |
| | Miles | | | | | | | | | |
| | Outlays | | | | | | | | | |
| | Miles | | | | | | | | | |
| | Outlays | | | | | | | | | |
| | Miles | | | | | | | | | |
| Total Outlays | | $____ | $____ | $____ | $____ | $____ | $____ | $____ | $____ | $____ |
| Total Miles | | $____ | $____ | $____ | $____ | $____ | $____ | $____ | $____ | $____ |

**SCHEDULE IV-E**
**ACTUAL AND POTENTIAL CAPITAL OUTLAYS - PROPOSALS OUTSTANDING**
(Dollars In Thousands)
PAGE 1 OF 2

Actual Capital Outlays

| Cable System (Identify) | | 1991 | 1992 | 1993 | 1994 | 1995 | 1996 |
|---|---|---|---|---|---|---|---|
| | Outlays | | | | | | |
| | Miles | | | | | | |
| | Outlays | | | | | | |
| | Miles | | | | | | |
| | Outlays | | | | | | |
| | Miles | | | | | | |
| | Outlays | | | | | | |
| | Miles | | | | | | |
| | Outlays | | | | | | |
| | Miles | | | | | | |
| | Outlays | | | | | | |
| | Miles | | | | | | |
| Total Outlays | | $_____ | $_____ | $_____ | $_____ | $_____ | $_____ |
| Total Miles | | $_____ | $_____ | $_____ | $_____ | $_____ | $_____ |

**SCHEDULE IV-E**
**ACTUAL AND POTENTIAL CAPITAL OUTLAYS - PROPOSALS OUTSTANDING**
(Dollars In Thousands)
PAGE 2 OF 2

Anticipated Capital Outlays

| Cable System (Identify) | | 1997 | 1998 | 1999 | 2000 | 2001 | 2002 | 2003 | 2004 | 2005 |
|---|---|---|---|---|---|---|---|---|---|---|
| | Outlays | | | | | | | | | |
| | Miles | | | | | | | | | |
| | Outlays | | | | | | | | | |
| | Miles | | | | | | | | | |
| | Outlays | | | | | | | | | |
| | Miles | | | | | | | | | |
| | Outlays | | | | | | | | | |
| | Miles | | | | | | | | | |
| | Outlays | | | | | | | | | |
| | Miles | | | | | | | | | |
| | Outlays | | | | | | | | | |
| | Miles | | | | | | | | | |
| Total Outlays | | $____ | $____ | $____ | $____ | $____ | $____ | $____ | $____ | $____ |
| Total Miles | | $____ | $____ | $____ | $____ | $____ | $____ | $____ | $____ | $____ |

**SCHEDULE IV-F**
**PAST PERFORMANCE - OTHER SYSTEMS**
PAGE 1 OF 1

1. Identify those systems listed in Schedule IV-A for which construction or operations (in relation to the timetables, standards and specifications of the applicable franchise agreement) have been impaired because of unprofitable operations and/or a lack of capital. Please provide a full explanation of each such situation.

## EXHIBIT V

## Institutional Network

# NEW YORK CITY'S INSTITUTIONAL NETWORK

## INSTITUTIONAL NETWORK ARCHITECTURE

Recent advances in telecommunications technology are paving the way for the much discussed and anticipated information superhighways that hold promise for government and private organizations alike, to operate more efficiently, more creatively, and less expensively. These developments in technology have combined with a truly competitive telecommunications market to offer a vast array of services to meet a wide variety of needs at reasonable prices. The Department of Information Technology and Telecommunications (DoITT) is the principal agency responsible for the design, planning, and implementation of the New York City Institutional Network. DoITT will take full advantage of these opportunities by adopting state-of-the art technology to maximize productivity, reduce costs, and enhance the delivery of services.

Planning for the New York City Institutional Network (I-Net) is premised on the need to accommodate high capacity integrated services while laying the groundwork for incorporating future-safe network elements as the system grows and user requirements increase. Optical fiber cable has become the medium of choice for land-based cabling infrastructures, and Synchronous Optical NETwork (SONET) has been adopted by the American National Standards Institute (ANSI) as the optical transport and networking standard. Therefore, implementation of the New York City I-Net will be based on SONET standards.

SONET is essentially a bandwidth "pipe" which provides the means of transporting a payload through the network regardless of its nature. A payload segment can be stripped out of this pipe at various points in the network to deliver required service without having to demultiplex the entire payload as would be the case in an asynchronous environment. SONET not only specifies unparalleled transport capacity, up to 2.4 Gb/s presently, but it adheres to the open standards philosophy which ensures compatibility between various vendors' equipment. It is designed to provide integrated broadband transport for voice, data and video as well as enhanced maintenance and network management capabilities.

SONET ring configurations are increasingly being deployed today, both in public and private applications, because of their speed potential in gigabits, fast self-healing properties, standard interfaces, add-drop capability, and the ability to handle existing data rates from 1.5 Mb/s to 45 Mb/s. Through adoption of a ring architecture, high reliability and end-to-end survivability are achieved at costs much lower than traditional point-to-point and mesh systems.

Therefore, the I-Net backbone system will comprise a ring of Add/Drop Multiplexers (ADM) operating at the Optical Carrier level 48 (OC-48). Table 1 shows the complete SONET signal hierarchy and gives insight into the system's capacity based on today's legacy signal categories.

**Table 1**
**SONET Signal Hierarchy**

| ANSI Designation | Optical Signal | Data Rate (Mb/s) | Payload Rate (Mb/s) | # of Low-Speed Channels | | |
|---|---|---|---|---|---|---|
| | | | | DS3 | DS1 | DS0 |
| STS-1 | OC-1 | 51.84 | 50.112 | 1 | 28 | 672 |
| STS-3 | OC-3 | 155.52 | 150.336 | 3 | 84 | 2,016 |
| STS-9 | OC-9 | 466.56 | 451.008 | 9 | 252 | 6,048 |
| STS-12 | OC-12 | 622.08 | 601.344 | 12 | 336 | 8,064 |
| STS-18 | OC-18 | 933.12 | 902.016 | 18 | 504 | 12,096 |
| STS-24 | OC-24 | 1244.16 | 1202.688 | 24 | 672 | 16,128 |
| STS-36 | OC-36 | 1866.24 | 1804.032 | 36 | 1,008 | 24,192 |
| STS-48 | OC-48 | 2488.32 | 2405.376 | 48 | 1,344 | 32,256 |
| STS-96 | OC-96 | 4976.64 | 4810.176 | 96 | 2,688 | 64,512 |
| STS-192 | OC-192 | 9953.28 | 9620.928 | 192 | 5,376 | 129,024 |
| *ATM: STS-3c | OC-N | 155.52 | 149.760 | Variable | | |

*ATM is mapped into a concatenated (c) signal.

The 2-fiber OC-48 bidirectional, line switched ring architecture, as depicted in Figure 1, was selected as the most economical configuration initially because of the low start-up costs, high level of reliability, and large capacity. The 2-fiber OC-48 bidirectional ring requires only one fiber pair initially and half the number of transmitters and receivers of the 4-fiber configuration. It can also be economically upgraded to a full capacity 4-fiber

system. In addition, a "Fail-soft" philosophy is used in the 2-fiber OC-48 bidirectional ring whereby the traffic is prioritized and 50% of the available bandwidth is dedicated to protection. The counter rotating ring architecture with automatic loop-back permits non-critical traffic to be selectively discontinued while priority traffic remains in service.

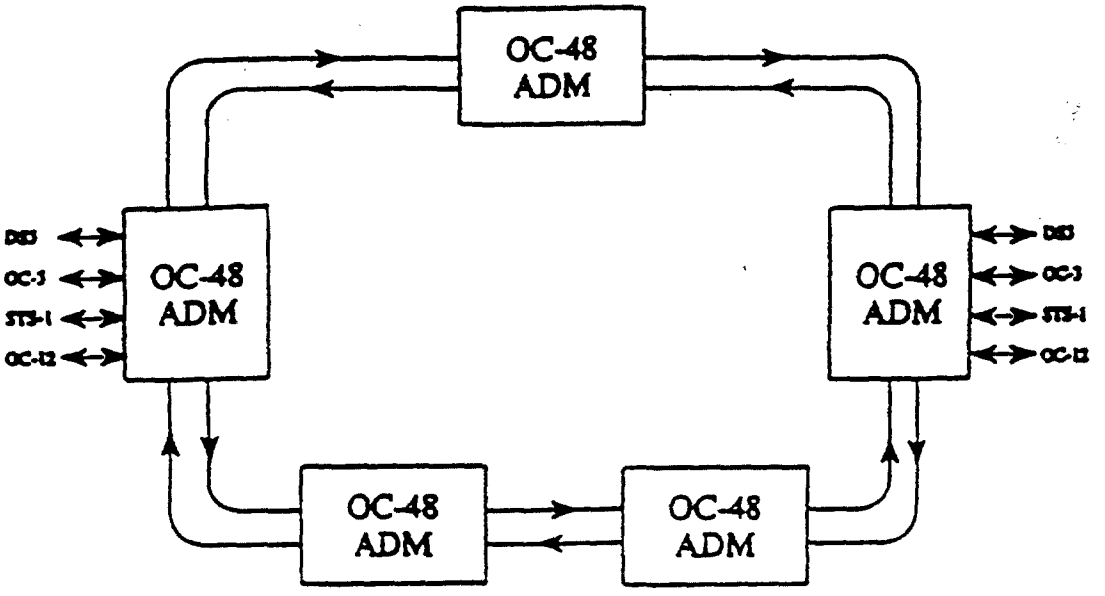


*Figure 1: Two-fiber OC-48 Bidirectional Ring*

The bidirectional ring protection scheme effectively functions like a traditional 4-fiber configuration but at a reduced-cost, 2-fiber layout. The add/drop feature of the system has obvious cost benefits in equipment alone due to the elimination of the back-to-back terminals which were a necessity in the past. When demand for capacity increases, the 2-fiber ring can be readily upgraded, in service, to a 4-fiber ring.

Finally, in order to assure virtually uninterrupted services to all I-Net users, Asynchronous Transfer Mode (ATM) has been selected as the "Bandwidth on Demand" technology to be used for network access and routing. ATM is the emerging multi-media communications technology that can be supported on the SONET backbone to provide efficient, high speed transfer of broadband communications information. ATM employs fixed length cells to carry voice, data, video, and images. Fixed length cells and low overhead simplify the switching

process by enabling switches to process millions of cells per second and ATM's simple structure allows it to be mapped easily into the SONET payload.

ATM is the first technology to provide a common format for bursts of high speed data, the ebb and flow of the typical voice telephone call, and the constant two-hour running of a video program. In addition, the basic element of the format used--the cell--is equally at home in any network, local or wide area, public and private. Hence, the excitement, not only does ATM finally provide a means for integrating voice, video, and data, but it also knits local and wide area networks into a seamless whole. The eventual migration to ATM over SONET is the ultimate goal of the DoITT I-Net. While ATM implementation costs are currently quite high, the cost per bit is lower than competing modes of high speed transport. Adapter prices are falling rapidly as more and more service providers and users are adopting ATM technology. This will eventually translate into the optimum solution over the long term. SONET is now the accepted standard for optical transport and networking, and interoperability between different suppliers' equipment is mandated.

ATM, combined with SONET compatibility, is emerging as the enabler of the information age. The ATM Forum, a non-profit international consortium with a present global membership of over 500 organizations, has already ratified the major User-Network Interfaces (UNI) in version 3.0, September 10, 1993, of the specification. These interfaces are shown in Table 2, below, as well as additional interfaces now under consideration.

**Table 2**
**ATM User-Network Interfaces (UNI)**

| Physical Layer Spec. V 3.0 | ATM Forum Designation | Bit Rate (Mb/s) | Line Code | Transmission Rate |
|---|---|---|---|---|
| | SONET STS-3c SONET OC-3 | 155.52 | 8B/10B | 194.4 Mbaud |
| | FDDI Physical Layer | 100.00 | 4B/5B | 125 Mbaud |
| | DS3 | 45.736 | B3ZS | 45.736 Mb/s |
| | E3 | 34.368 | HDB 3 | 34.368 Mb/s |
| | E4 | 139.264 | CMI | 139.264 Mb/s |
| Under Review | Category 3 UTP | 25 | - | - |
| | Category 3 UTP | 51 | - | - |
| | Category 5 UTP | 155 | - | - |

## BASIC BUILDING BLOCKS

Planning for the I-Net requires a comprehensive listing of the basic equipment groups needed to build a network including: Network access terminals, video distribution elements, ancillary equipment, and accessories. Table 3 summarizes the I-Net basic building blocks.

**Table 3**
**Basic Building Blocks for I-Net**

| SONET System | Enterprise Network |
|---|---|
| OC-3 MULTIPLEXER<br>• TM 3 Terminal<br>• ADM 3 Add/Drop (Line, Ring)<br>• RPT 3 Repeater<br>• OPH Optical Hub | ATM SWITCH<br>• User Network Interface (UNI)<br>• LAN/WAN Interface<br>• PSTN Gateway Elements |
| OC-12 MULTIPLEXER<br>• TM 12 Terminal<br>• ADM 12 Add/Drop (Line, Ring) | VIDEO DISTRIBUTION SYSTEM<br>• Digital Video Codec<br>• Cross-Connect Switch<br>• Master Control System<br>• Cable, Satellite Access |
| OC-48 MULTIPLEXER<br>• ADM 48 Add/Drop (Ring) | DISTRIBUTION NETWORK ACCESS<br>• OC-1/T1 Terminal<br>• Voice, Data, Video Modules |
| FIBER OPTIC ACCESSORIES<br>• Distribution Panels, Enclosures<br>• Cables, Connectors, Pigtails | NETWORK MANAGEMENT<br>• Operating System<br>• Mediation Devices |

Backbone Hub

The key element in the I-Net system topology is the backbone hub station, which is illustrated in Figure 2 below.

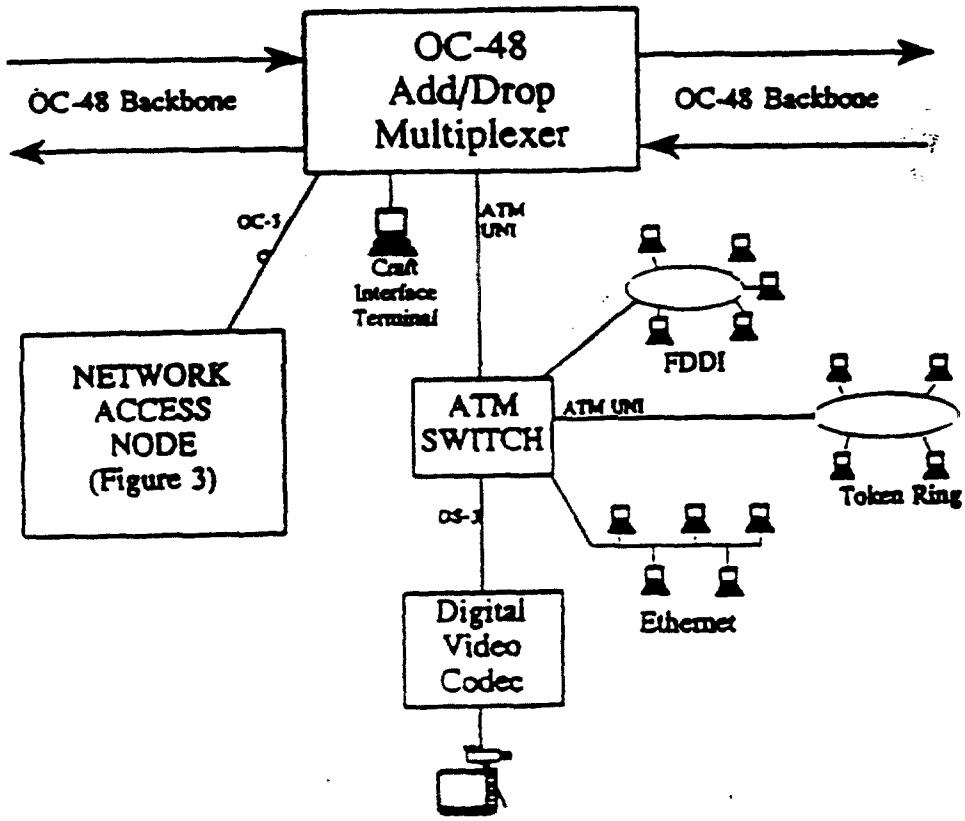


*Figure 2. Backbone Hub Station*

This illustration shows all of the various service drops that are possible from a hub. It is expected that a typical user hub will make use of only a portion of these services. Access to the I-Net from co-located offices in a high-rise building or in a small campus complex can be connected by using existing cabling infrastructure. Access nodes which are located several kilometers away are concentrated in an OC-3 Terminal Multiplexer (TM) and connected to the backbone hub via optical fibers. Note that the OC-3 TM can also be reconfigured as an ADM if an in-line or ring system is needed to route more than one area node into the ring.

## Network Access Node

The OC-3 Network Access Node, Figure 3, combines all the voice, data and video services into the SONET bearer as is done at the hubs, but on a smaller scale.

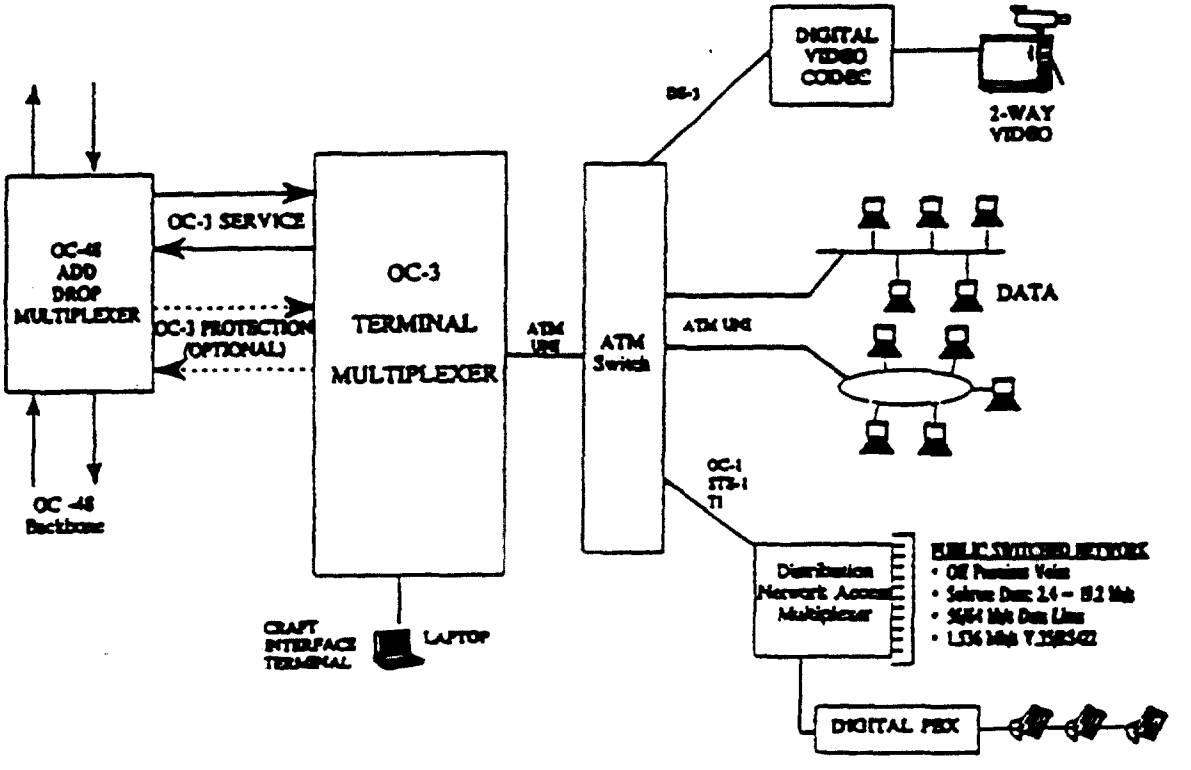


*Figure 3. OC-3 Network Access Node*

Also shown here is the possibility of compressed video for surveillance systems. The OC-3 node can be equipped for either line-switched or route diversity protection at nodes which bear critical traffic. Another system feature is the possibility of a low-cost optical extension of the OC-3 TM from an OC-48 ADM to form a network access node out of a high density cluster of users in close proximity to a Backbone Hub.

## ATM Switch

Another key element in the I-Net system architecture is the ATM Switch. This is a cell switching and multiplexing device which will accommodate all forms of digital data: LANs, such as Token Ring, Ethernet and FDDI, and time-sensitive transmissions such as voice and video. Because of its networking flexibility, open-ended nature, and potential to integrate widely different applications within a common platform, ATM is rapidly gaining broadbased support. ATM promises to integrate LANS and WANs more closely than other technologies to provide seamless interconnection throughout the network.

## Video Distribution System

The I-Net will have a large capacity for transporting two-way full motion video with audio for Interactive Distance Learning (IDL) and video conferencing. One-way video will be used for CATV/satellite feeds, VCR/CD playback, and surveillance systems such as premises security and traffic control applications. Two-way video will be accomplished through the use of digital video encoders/decoders (Codecs) and an associated digital cross-connect switching system as shown in *Figure 4*.

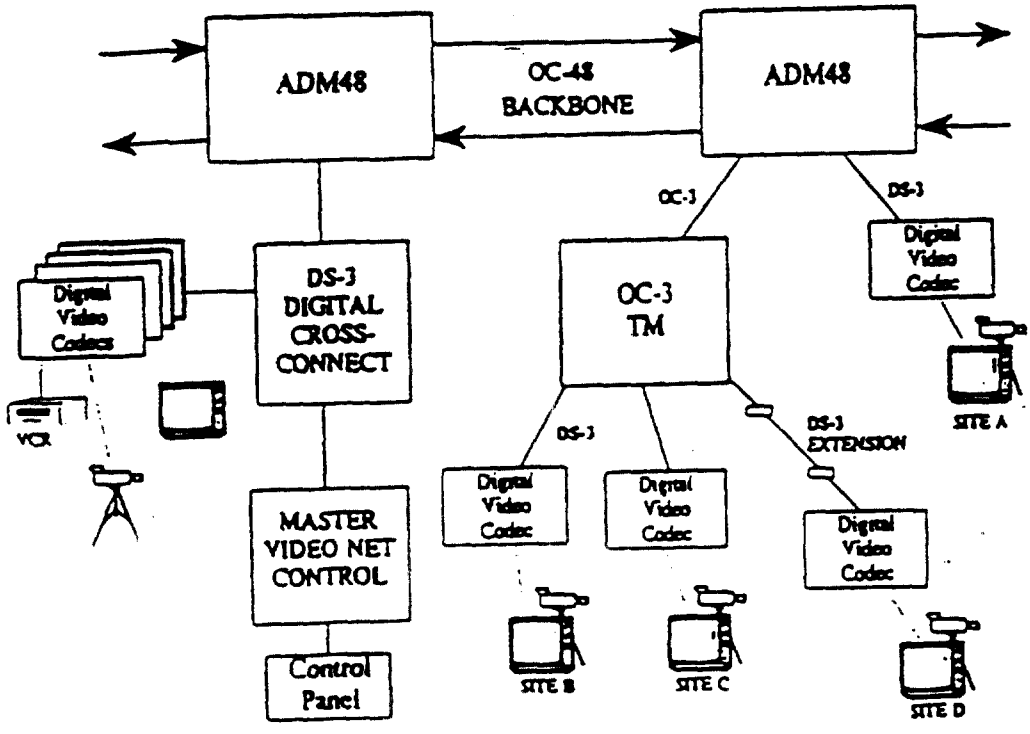


*Figure 4. Typical Video Distribution System*

For Interactive Distance Learning (IDL) applications, master system control consoles will permit instructor/ coordinator control of cameras and mode of operation. The master network management software orchestrates the day-to-day class schedules and provides system administration functions including network topology and diagnostics. Based on predefined class schedules or special event requirements such as guest speakers, the Master System will automatically set up the network for the required sessions. The teacher controls the video source selection, student question and answer exchanges, and camera pan, tilt, and zoom functions. The master system can be configured for either scan mode, with each classroom scanned sequentially, or continuous view. In continuous view mode, a "quad-split" presentation is also an option, where four classrooms can be viewed on a single monitor screen.

Other video services, such as video conferencing, desk-top multimedia, and surveillance, will also be provided through utilization of codecs and a multimedia management system which will support one-way or two-way services through software control and a menu-driven interface. Additionally, the system's add/drop multiplexing scheme permits both individual routing and broadcasting modes of operation. The video quality of the individual services will depend on the user agencies' perceived need balanced with the realities of cost-effective bandwidth management. A good selection of video codecs are available for a variety of applications. Compression techniques allow use of transmission facilities variably operating from 112 Kb/s to 45 Mb/s depending on the user's video quality needs. Table 4 gives some typical examples.

**Table 4**
**Digital Encoding Techniques**

| Technique | Codec Bit Rate | Type/Quality of Service |
|---|---|---|
| CCITT* H.261/H.320 | 112-2.048 Kb/s | Desktop multimedia, surveillance |
| NTSC/JPEG* | 8-42 Mb/s (Uni) | Video conferences, multimedia |
| MPEG II* | 9-43 Mb/s (Uni) | Video conference, IDL, multimedia |
| Proprietary | 22-45 Mb/s | IDL, CATV |
| Proprietary | 155 Mb/s (STS-1) | Studio, telemedicine |

* Compressed

Initially, DoITT will employ proprietary DS-3 codec technology for video applications with eventual migration to standards based codecs. This adherence to standards will allow for complete system

inter-operability. At the present time, it appears that video codecs will be employing either MPEG or motion JPEG standards, and motion JPEG is currently the most economical solution. Migration to the emerging standards of MPEG II over ATM is planned.

Distribution Network Access Multiplexer

It is generally acknowledged that Time Division Multiplexing (TDM) equipment, i.e., 45 Mb/s multiplexers and 1.5 Mb/s channel banks, will remain on the scene for many years to come. I-Net will support TDM voice, data aggregates, and compressed video by providing the necessary asynchronous paths between network nodes. These existing data rates are transformed into standard SONET formats as "Virtual Tributaries" (VTs) which are contained in a Synchronous Transport Signal, level 1 of STS-1 as shown in Table 5. STS-1 (51.84 Mb/s) is the basic rate signal for the SONET bearer channels. Several STS-1s are then multiplexed together to form an electrical STS-N signal.

**Table 5**
**Virtual Tributaries**

| ANSI Designation | Payload Rate (Mb/s) | Data Rate (Mb/s) | Asynch Designation | # of DS0s |
|---|---|---|---|---|
| VT 1.5 | 1.544 | 1.728 | DS1 | 24 |
| VT 2 | 2.048 | 2.304 | E1 | 30 |
| VT 3 | 3.152 | 3.456 | DS1C | 48 |
| VT 6 | 6.312 | 6.912 | DS2 | 96 |
| VT 6-Nc | – | Nx 6.9 | (Future) | Variable |
| *Asynch DS3 | 44.736 | 44.736 | DS3 | 672 |

*Special case, not classified as VT.

DS3 interface to the SONET-based system is an integral function of the SONET OC-3 Multiplexer, using the method employed by asynchronous multiplexers. It is capable of multiplexing twenty-eight DS1 signals into a DS3 signal. The capacity of the OC-3 is eighty-four DS1s or three DS3s in any mix: the typical configuration is two DS3s and twenty-eight DS1s.

T1 Access Multiplexers will be used to access the SONET-based system for T1 services. Of course, existing T1 multiplexers will continue in service for the lifetime of a particular product, but a generic specification will cover new purchases, again, dictated by the economics of commonality

Future voice and 64 kb/s aggregate data will be accommodated by SONET OC-1 Multiplexers since these have built-in cross-connect capability and are included in the SONET network management scheme.

## Network Management

At the network management and control facility, shown in *Figure 5*, separate control monitoring equipment will be necessary for the various voice, data, and video services on the network.

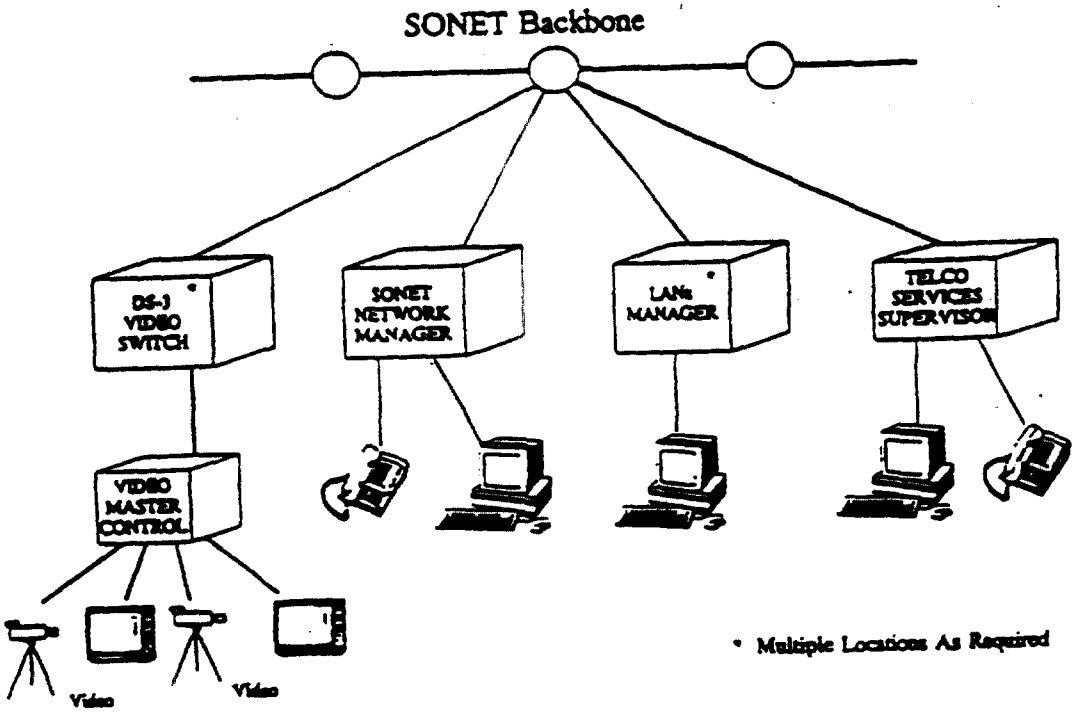


*Figure 5. Network Control and Management Facility*

It is anticipated that the network will support multiple video switching centers. Electronic switching capability will exist at the DS3 level to interconnect the users. However, partitioned video networks with their own discrete command control facilities appear to be the most logical approach. These partitioned video networks would be available to user communities such as the criminal justice system, City University, and the Board of Education. These communities have a continuous need for video capabilities. Therefore, they have greater access to scheduling the use of the Network's

bandwidth, which they would control and administer themselves. Agencies with less frequent demands for video would be routed through a centralized switching control center.

The SONET network manager will be used to control and monitor the SONET backbone network and the various Network Elements (NE) by means of the SONET Data Communications Channel (DCC) and any IBM compatible personal computer. This function is also accessible at any point in the system using a laptop/notebook unit at a craftperson's interface port. LAN management stations might be defined not only for individual agencies, but for individual types of LAN systems that exist within the area. As the Network migrates towards ATM switching, an ATM management system will be required. This will provide for administration of LAN interconnections. In the future, video and voice communications may also be routed through the ATM switch. At this time, ATM management will be used to insure the continuity of these time critical signals. The interim management tool for ATM is the same as that used for LAN management and is called SNMP. The ATM forum is currently at work creating a management tool specifically designed for ATM which will be upgradeable from Simple Network Management Protocol (SNMP).

In addition to providing the basic network management function, the DCC provides data links for various users' needs such as local and express orderwire, user-defined alarms/controls, two telemetry channels, and an Ethernet. The user-defined alarm and control interfaces can be used to provide data acquisition to a facilities and premises management system In this way, DoITT can separately manage their fiber cable resources.

The telecommunications service supervisors responsible for various standard T1 services and PBX systems within the City can monitor performance criteria and alarms from a central location or this function can be distributed within the individual user agencies. The SONET system's DCC provides serial and parallel telemetry channels which can be used with an operating system to monitor and control various co-located telephony related equipment. It is envisioned that DoITT will either co-locate SONET ADMs within a NYNEX Central Office or designate a NYNEX Central Office as an I-Net hub point within the OC-48 ring. Certain users will be able to lease access services from NYNEX at DS1, DS3, or OC-3 to gain access to the I-Net via the NYNEX/I-Net gateway. The telco services supervisor will be used to manage, i.e., configure, re-configure, and add, transmission capacity on a dynamic basis as user and network bandwidth requirements change.

The overhead data communications channel in the SONET system has the capacity and flexibility to integrate all the necessary operations, alarms, maintenance and configuration control facilities of the I-Net user agencies.

## FIBER OPTIC RESOURCES

The Institutional Network will be valuable in linking City government agencies, educational and cultural institutions, criminal justice facilities, fire departments, municipal hospitals, social services offices and selected City housing projects. Providing the necessary interconnecting transmission facilities will be the hundreds of miles of fiber optic cables which are now in place or in the planning stages. These fiber optic resources were allocated to the City as part of the payment of franchise fees by CATV companies and through in-kind contributions from various fiber optic communications companies and competitive access providers seeking to use New York City's right-of-way. A map illustrating the fiber optic cable resources available for this purpose is presented in the appendix, *Figure A*.

As the networks expand, additional fiber plant will become available to the City which will facilitate I-Net access to a substantial client base in each of the five boroughs. DoITT will install additional fiber optic cable as required on a justifiable need basis to remote user locations.

# EXHIBIT VI

## SCHEDULES FOR FINANCIAL AND BACKGROUND INFORMATION