Applying unit investment costs and structure factors to calculate total loop plant investment costs -- After the Loop Module has determined the number and size of all loop components in the network, it calculates the total loop investment costs The Loop Module costs out the network sheet by matching the calculated copper and fiber cable sizes with per foot plant costs for copper feeder, copper distribution and fiber The investment costs for other plant types are calculated using the same basic method Because main feeder segments typically serve multiple CBGs along the feeder route, formulas assign the feeder segment costs to each associated CBG and then to each household using the "Segment Type" and "Household Count" variable described above

After these investments have been determined, structure cost factors (i.e., the Distribution Cable Multiplier, Feeder Cable Multiplier and Fiber Multiplier) are applied. As explained earlier, different structure factors apply to each combination of plant type (Aerial or Underground), Density Zone and terrain type.

For example, the cable structure percentage for a CBG that was served by cable feeder but which had a Segment Type 2 of SLC and a Segment Type 3 of AFC — meaning that other CBGs further out along the main feeder route are served by SLC and AFC feeder — would be 80%, while the SLC Structure percentage and AFC Structure percentage would be 10% each. The copper factor for that CBG would then be weighted by 80% and the fiber factor would be weighted by 20%. These weighted factors are multiplied by the corresponding copper and fiber feeder investments and the results are summed. The structure factors for distribution cable are similarly weighted and applied to develop the total investment costs for distribution including structure.

4. Description of Model Outputs and Connection to Next Module

The Loop Module produces total investment costs by CBG for distribution cable, associated structure, feeder cable and electronics and a total of all these loop investment costs. The Loop Module then feeds this Total Loop Cost, plus Loop Cost per Household, Household Density Range and average Total Loop Length for each CBG to the Convergence Module, which combines them with switching, signaling and transmission investments.

F. WIRE CENTER INVESTMENT MODULE

1. Overview

This Module produces network investments at the wire center, interoffice transport, signaling and operator systems levels in the following categories:

Switching and wire center investment -- This category includes investment in local and tandem switches, along with associated investments in wire center facilities, including buildings, land and power systems and distributing frames.

Signaling network investment -- This includes investment in Signal Transfer Points, Service Control Points ("SCPs") and signaling links

Transport investment -- This category consists of investment in transmission systems supporting local interoffice (tandem and direct) trunking, intraLATA toll facilities (tandem and direct) and access facilities (tandem and direct) The model also separately calculates investment in operator trunks.

Operator Systems Investment -- This includes investments in operator systems positions.

The Wire Center Investment Module, as shown in Figure 1, contributes wire center-related investments to the Convergence Module, which in turn combines these with loop-related investments for application to the Expense Module.

The Wire Center Investment Module adds several network components to the modeling process that are omitted from the BCM. The BCM estimates only end office switching investment and does not address complete wire center investments that would include tandem switching, transport, signaling and operator services investments. Furthermore, the BCM estimates monthly costs by multiplying loop and switching investment per line by a single constant and does not allow the user to vary capital or expense factors to reflect the values pertaining to a specific company or study area.

Figure 5 Wire Center Module

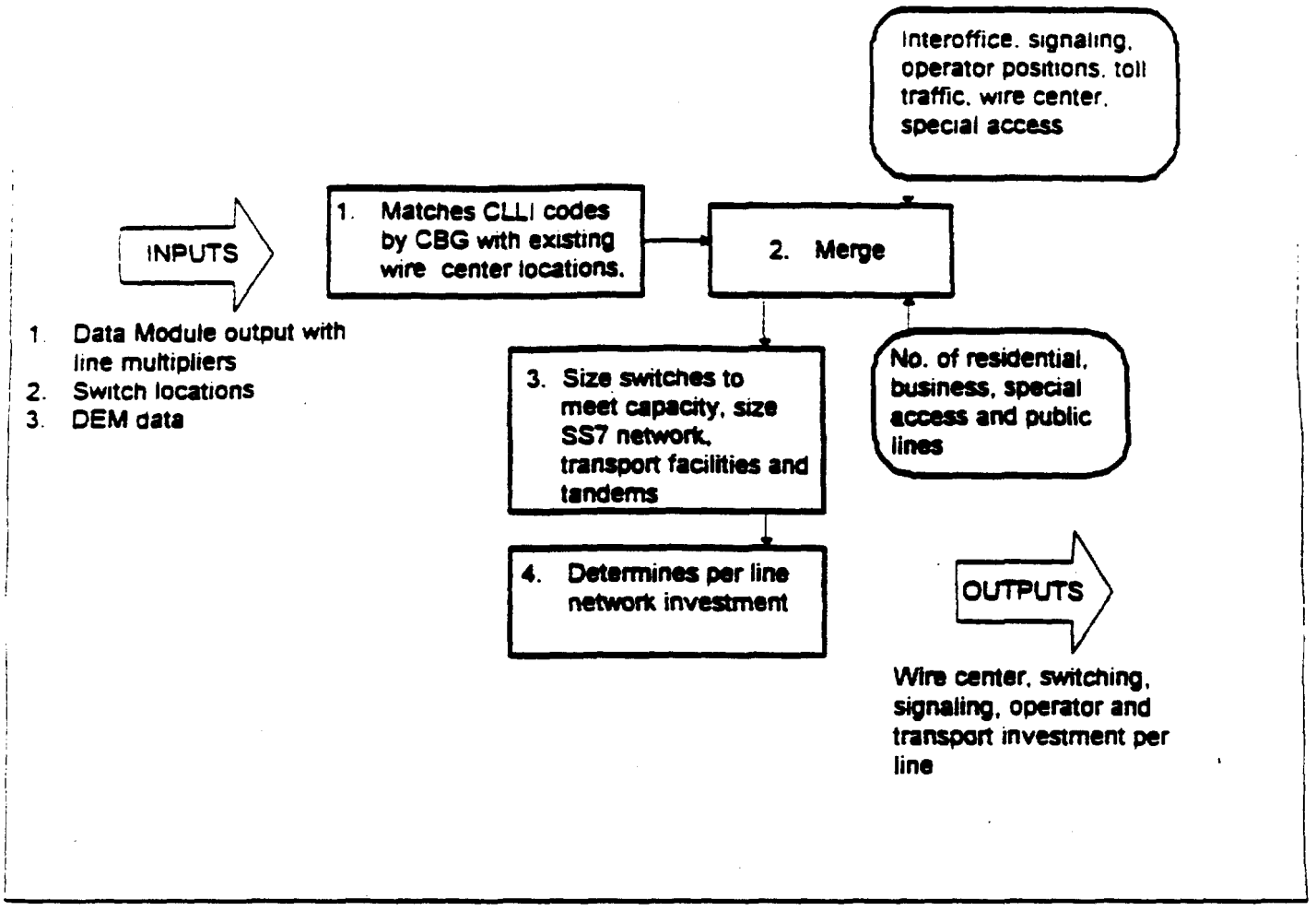

2. Description of Inputs and Assumptions.

For the wire center module to compute switching and transmission investments, it must be given total line counts for each wire center and wire center geographical locations must be known for distance computations. It also requires subscriber traffic assumptions, as well as inputs describing the distribution of total traffic among local intraoffice, local interoffice, intraLATA toll, interexchange access and operator services. This module uses as inputs overall line counts obtained from the BCM Data Module and line counts per wire center obtained from the Line Multiplier Module.

Many of the calculations in the wire center module rely on traffic assumptions obtained from Bellcore documents.[27] These inputs, which the user may alter, assume 1.3

[27] Bell Communications Research, *LATA Switching Systems Generic Requirements, Section 17: Traffic Capacity and Environment*, TR-TSY-000517, Issue 3, March 1980.

busy hour call attempts ("BHCA") per residential subscriber and 3.5 BHCA per business line each with an average holding time of 150 seconds. Other inputs, which also may be changed by the user, specify the fraction of interoffice traffic, the fraction of traffic that flows to operator services, the local fraction of overall traffic, as well as the breakdowns of direct-routed and tandem-routed local, intraLATA toll and access traffic. The default values for these parameters are as follows:

Interoffice fraction of total traffic	0.65
Local fraction of total traffic	0.75[28]
Operator services fraction of total traffic	0.02
Tandem-routed fraction of local interoffice traffic	0.40
Tandem routed fraction of intraLATA toll traffic	0.20
Tandem-routed fraction of access traffic	0.20

These values were determined from conversations with AT&T and MCI representatives, as well as from publicly-available studies of usage produced by LECs.

3. Explanation of Key Algorithms

The following sections describe the key algorithms used to generate investments associated with switching, wire centers, interoffice transport, signaling and operator systems functions.

a) Switching investment calculations

The Wire Center Module computes investment per line for end office and operator tandem switching, by separately developing the wire center investments required for each switch in the modeled network.

The Module assigns at least one end office switch to each wire center. It sizes switches in the wire center by adding up all the lines in the CBG's served by the wire center and then compares this line total to the maximum allowable switch line size. This parameter is user-adjustable, but set at 100,000 lines with a fill factor of 0.80, yielding a maximum effective switch line size of 80,000. The model will equip the wire center with a single switch if the number of switched access lines served by the wire center is no greater than 80,000, using the default assumptions. In general, a switch may serve any line count between zero and 80,000. Thus, if a wire center serves 90,000 lines, the model will compute the investment required for two 45,000 line switches[29]. The wire center module also compares the BHCA produced by the mix of lines served by each switch with a user-

[28] The fraction of local traffic is determined by Dial Equipment Minutes ("DEM") statistics reported by each carrier to the FCC; the typical value of this fraction is approximately 0.75.

[29] If multiple switches are required in the wire center, they are sized equally to allow growth on both switches.

adjustable processor capacity (set at 1,000,000 BHCA) to determine whether the switch is line-limited or processor limited.

End office switches may exhaust their capacity by running out of processor capacity, exceeding port limits, or by exceeding traffic (switching matrix) capacity. Typically, they are limited by processor capacity or by line port capacity. While processor capacity requirements are typically stated in terms of the effective number of BHCA that a processor configuration may handle, the processor is also affected by use of rates custom calling features, the need for processing SS7 messages and other processing tasks. Including both a processor limit and a port limit allows the model to consider the overall switch capacity in practical terms. The model's specific default values were set according to the engineering judgment of the Hatfield Model developers and are based on practical values for current end office switches.

Once the model determines the end-office switch line size, it obtains the investment per line from an investment function that relates per-line switching investment to switch line size. The data to define this function were obtained from a publicly-available study of the central office equipment market published annually by McGraw-Hill.[30] This study shows the average investment per new line of digital switching paid by BOCs to be $104 and by independents to be $241 in 1994. The model combined these figures with average BOC (11,200) and independent (2,761) switch line sizes derived from data published in the FCC's Statistics of Communications Common Carriers, along with information on much larger switches obtained from switch manufacturers to develop the complete investment function.[31] Figure 6 shows the resulting investment curve.

30 Northern Business Information study: *U.S. Central Office Equipment Market -- 1994*, McGraw-Hill.

31 Federal Communications Commission, *Statistics of Communications Common Carriers*, Tables 2.3 and 2.4 1994 edition.

Figure 6 Switching Investment Function

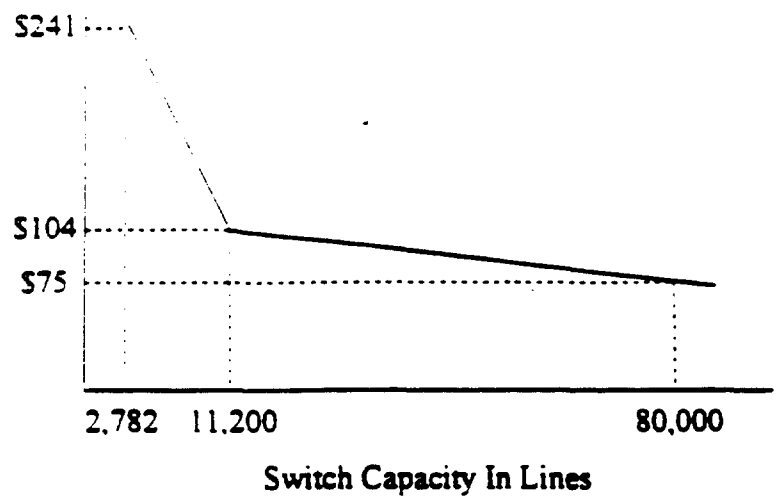

The wire center module uses existing tandem locations for computing interoffice transmission distances. These tandem locations are obtained from the LERG data. Tandem and operator tandem switching investment are computed according to assumptions contained in an AT&T report on interexchange capacity expansion costs filed at the FCC.[32] The investment calculation assigns a price to switch "common equipment," switching matrix and control structure and adds to these amounts the investment in trunk interfaces. The numbers of trunks and their related investments, are derived from the transport calculations described below.

Wire center investments required to support end office and tandem switches are based on HAI assumptions about the size of room required to house a switch (for end offices, this size varies according to the line sizes of the switch), construction costs, lot sizes, land acquisition costs and investment in power systems and distributing frames.

The model computes required wire center investments separately for each switch. For wire centers housing multiple end office switches, the wire center investment calculation adds switch rooms to house each additional switch. Tandem wire center

32 AT&T, "An updated study of AT&T's Competitors' Capacity to Absorb Rapid Demand Growth", filed with the FCC in CC Docket No. 79-252, April 24,1995 ("AT&T Capacity Cost Study")

calculations assume the maximum switch room size. power and distributing frame investments Tandem switches also include a separate land investment

b) Transport calculations

Transport calculations are driven primarily by the traffic and routing assumptions listed above. along with the total mix of access lines served by each switch The model determines the overall breakdown of traffic per subscriber according to the traffic assumptions and computes the numbers of trunks required to carry the traffic. These calculations are based on the fractions of total traffic assumed for interoffice. local direct routing, local tandem routing, intraLATA direct and tandem routing and access direct and tandem routing. These traffic fractions are applied to the total traffic generated in each wire center according to the mix of business and residential lines and appropriate per-line offer load assumptions. These trunk loading assumptions include a maximum trunk utilization of 27.5 CCS. which is user-adjustable.[33]

Tandem transport distances are computed from existing wire center and tandem locations. The model conservatively assumes rectilinear routing. It does this by adding the north-south and east-west distances between end offices and their homed tandem locations to produce the overall facilities distance. This is superior to calculating the airline distance between the endpoints because facilities routes usually follow streets and highways that typically are oriented in north-south and east-west directions. The resulting distances are somewhat greater than they would be if calculated as airline mileage.

Direct-route distances for local, intraLATA and access traffic are set as user-definable inputs. It is not possible to compute these values from wire center locations, because actual exchange area definitions determine which routes will carry local versus intraLATA toll traffic. Because interexchange carrier points of presence ("POPs") are not available for entry into the model to compute access route distances, the default distances for direct transport are 10 miles for local direct routes, 25 miles for intraLATA direct routes and 25 miles for access facilities. These route distance assumptions are developed from conversations with AT&T and MCI representatives who have studied publicly-available LEC documentation.

Transport investment is based on a user-defined per-channel-mile figure. The default value is $30 per DS0 channel mile. This is computed based on a 15-mile transmission facility consisting of a 144-fiber cable installed in conduit at a total cost per foot of $14. Terminal equipment is assumed to have a 4 DS-3 capacity with an installed investment of $52,000 per end. This fiber and installation investment is based on BCM fiber assumptions. The terminal equipment investment derives from pricing and installation assumptions for a fully-equipped AT&T (now Lucent Technologies) DDM-

[33] The 27.5 CCS value is based on an AT&T estimate of maximum per trunk usage one can expect on typical size trunk group. See. AT&T Capacity Cost Study.

1000 180 Mbps optical multiplexer The specific assumptions are that the multiplexer investment is $42,000 and installation is $10,000

c) **Signaling network calculations**

The Wire Center Module uses existing switch and STP locations for computing signaling link distances. The model uses the STP pair locations in each LATA as reported in the LERG and computes the total link distance to each switch as the sum of the distances from each wire center to each STP location. Routing is again rectilinear as described for transport calculations. The investment per link-mile is assumed to be the same $30 per DS0 channel-mile figure discussed earlier. The latter value is appropriate because signaling links typically share transmission routes carrying common and dedicated transport trunks.

The model always equips at least two signaling links per switch. It also computes SS7 message traffic according to the call traffic assumptions described earlier. User inputs define the number of ISUP ("ISDN User Part") messages, along with the message length, required for interoffice call control. Default values are six messages per interoffice call attempt with twenty-five octets per message. These values are those assumed in the AT&T capacity cost study.[34]

Other inputs define the number and length of TCAP ("Transaction Capabilities Applications Part") messages required for database lookups, along with the percentage of calls requiring TCAP message generation. Default values, also obtained from the AT&T capacity cost study, are two messages per transaction, at 100 octets per message and 10% of all traffic requiring TCAP generation. If the message traffic from a given switch exceeds the link capacity (also user-adjustable and set at 56 kbps and 40% occupancy as default values), the model will add links to carry the computed message load. The total link distance calculation includes all the links required by a given switch.

Signal transfer point capacity is expressed as the total number of signaling links each STP in a pair can terminate (default value is 720 with an 80% fill factor). The investment per pair is set at $5 million and may also be changed by the user. These default values derive from the AT&T capacity cost study.

Service control point ("SCP") investment is expressed in terms of dollars of investment per transaction per second. The transaction calculation is based on the fraction of calls requiring TCAP message generation and the total TCAP message rate in each LATA considered by the model is used to determine the total SCP investment. The

[34] See. AT&T Capacity Cost Study.

default SCP investment is $20,000 per transaction per second and is based on a number reported in the AT&T capacity cost study.[35]

d) Operator systems calculations

Operator tandem and trunk requirements are based on the operator traffic fraction inserted by the user into the model and on the overall maximum trunk value of 27.5 CCS discussed above. Operator tandem investment assumptions are the same as for local tandems. The Model assumes that subscriber databases required for operator services are included in overall operator tandem common equipment investment of $1 million. This is the same value assumed for local tandem common equipment that was derived from the AT&T capital cost study.

Operator positions are assumed to be based on current personal computer terminal technology. The default operator position investment is $3500 to purchase a high quality personal computer terminal with a suitable interface to the operator tandem. The total investment is based on the engineering judgment of the Hatfield Model developers. The Model includes assumptions for maximum operator "occupancy" expressed in CCS. The default assumption is that each position can be in service 27.5/36 of each hour. This value is related to the maximum trunk occupancy assumption described above. Also because many operator services traditionally handled by human operators may now be served by announcement sets and voice response systems, the model includes a "human intervention" factor that reflects the fraction of calls that require human operator assistance. The default factor is 10, which is believed to be a conservative estimate. (A factor of ten implies that one out of ten calls will require human intervention).

G. CONVERGENCE MODULE

The Convergence Module combines the loop investment produced by the BCM with the wire center, switching, transport, signaling and operator systems investments calculated by the wire center investment module. The output of the Convergence Module is the complete collection of network investments for use by the expense module.

There are, as noted elsewhere in this document, several loop components missing from the BCM, most notably serving area interfaces (SAIs), the interface between feeder and distribution cables, terminals or pedestals and associated distribution cable splices, the interfaces between distribution cables and subscriber drops, along with associated splices required to tap into the distribution cables, the drops extending to each customer's premises and the network interface device ("NID") that marks the boundary between the customer's inside wiring and the network.

[35] See. AT&T Capacity Cost Study.

The convergence module adds these components to the loop investment produced by the BCM. The NID, drop and terminal/splice values are added for each line directly. The values used, which are user-adjustable, are $30 for the NID, obtained from discussions with subject-matter experts, $40 for the drop, taken from the NET Incremental Cost Study,[36] and $35 for the terminal and splice, based on the engineering judgment of the model developers.

The SAI investments depend on whether copper or fiber feeder cable is used the particular CBG. If the feeder cable is copper, the SAI is a simple cross-connect arrangement, whose investment is obtained from a table listing SAI installed prices by total lines served. For optical feeder cable, the SAI consists of an optical multiplexer with an associated cross-connect, cabinet, powering arrangement and prepared site.

The BCM "structure" investment for distribution and feeder facilities are of particular interest. The BCM developers use the term "structure" to refer to investment in poles, conduit and the necessary installation labor to place aerial and underground cable.

Structure investment may be shared among utilities, typically local exchange carriers, cable television operators and electric companies. To the extent that more than one utility may place cables in common trenches, conduits, or on common poles, it is appropriate to share the costs of these structural items among them. The Convergence Module thus separately reports the structure investment to the Expense Module, where the user may select the fraction of distribution and feeder structure investment to be assigned to telephone service.

H. EXPENSE MODULE

1. Overview

The Expense Module provides per-line and per-month cost summaries for each Basic Network Function ("BNF") by calculating capital carrying cost, operating expenses, network operation expense and attributable support expenses for each of eleven unbundled network functions, plus public telephone terminal equipment.

The Expense Module uses the output of the Convergence Module to capitalize the investments needed for each BNF, reflecting TSLRIC principles as presented in Appendix 1. The module requires investment, revenue and expense data reported by individual LECs in their annual ARMIS reports. The Module's other required inputs are data on individual carrier (debt-equity ratio, cost of debt and cost of equity) capital structure parameters.

[36] 1993 New Hampshire Incremental Cost Study

The Expense Module uses these data to calculate operational expense ratios using the comparable plant specific and network operations expenses and investments, along with the LEC's leverage, revenues, tax rate, cost of debt and equity and economic service lives for various types of network equipment[37]

This section will describe the inputs and assumptions of the Expense Module, including Convergence Module inputs, ARMIS data, capital structure parameters and expense factors built into the module. It will also explain the key algorithms used to determine capital costs and operating expenses.

[37] Note that the Expense Module does not use these historical data on embedded expenses as direct elements of LEC TSLRIC. Rather, it develops efficient, forward-looking values for these expenses that are extrapolated from relationships that may have existed historically.

Figure 7 Expense Module

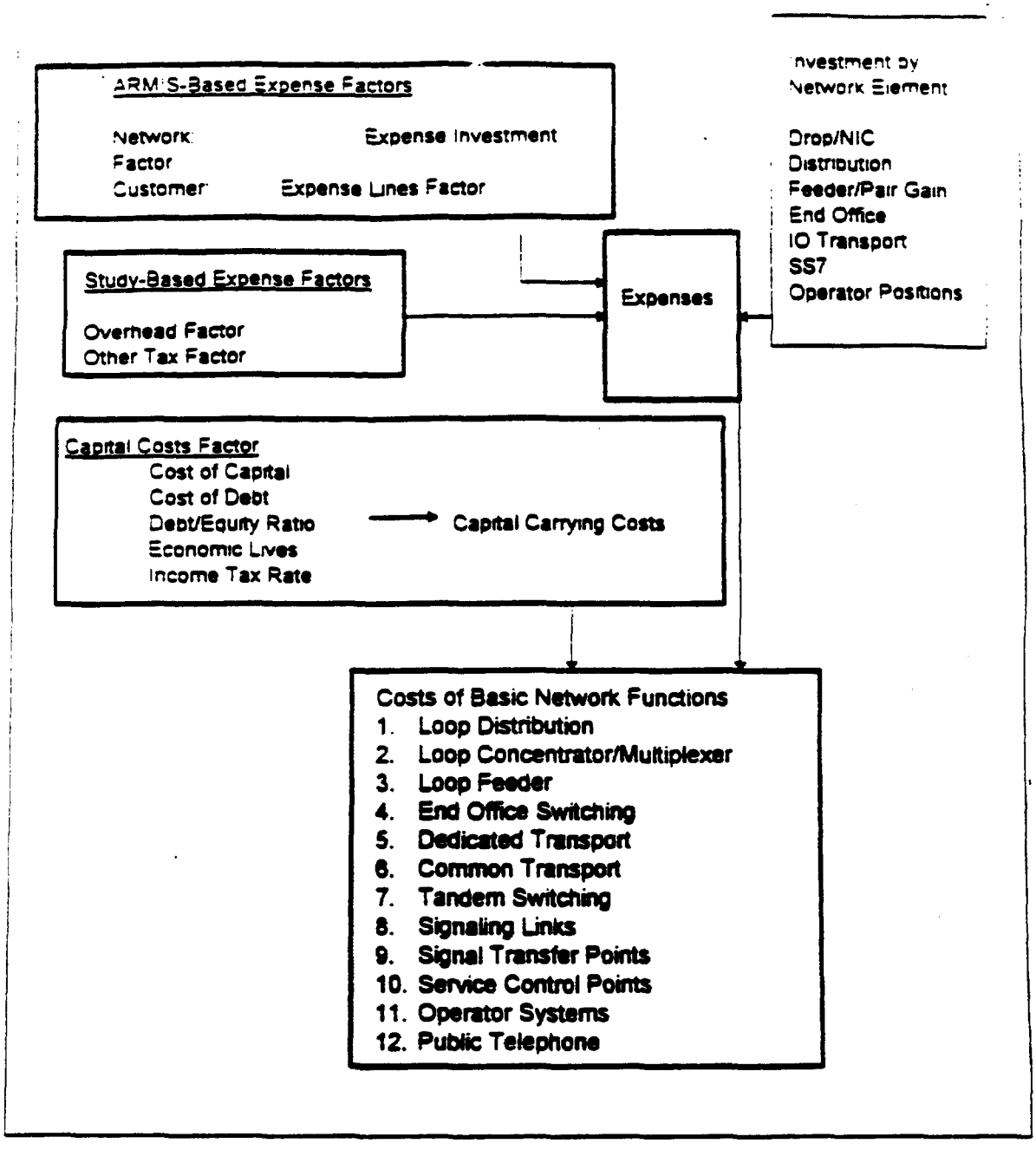

2. Description of Inputs and Assumptions

a) Convergence Module Outputs

The primary input to the Expense Module is the Convergence Module output which outlines the investments required to "build up" a virtual telephone network for the area or carrier under study. These investments include the hardware, software, engineering and installation of the network elements. They are sorted by household

density range. The Convergence Module produces investments in the following categories

- Distribution (aerial and underground copper cable and associated structure)
- Feeder (aerial and underground fiber and copper feeder cable and associated structure)
- Switching (end office and local tandem switching investment)
- Wire center (end office wire center and local tandem wire center investment)
- Operator services (operator tandem switching, tandem wire center, trunks and operator positions)
- Transport (common and dedicated)
- STPs
- SCPs
- Signaling links
- Drop investment per line
- NID investment per line
- Terminal and splice investment

In addition, the Convergence Module output sheet summarizes line and trunk counts, tandem routing fractions, DEM units and utilization ratios. Line counts include residential, business, special access and public access lines.

b) ARMIS Data

The ARMIS data used in the Expense Module includes investment and operating expenses and revenues for a given carrier and state. This data is used to derive the total investments, expenses and revenues for each BNF. The investment, expense and revenue categories are listed below and described in detail in the Key Algorithms section.

(1) plant specific operations

- general support - land, buildings, vehicles, furniture, office equipment and other equipment
- wire center switching - analog and digital electronic switching, operator systems
- wire center transmission - circuit equipment, transmission
- information origination and termination - station apparatus, customer premises wiring, public telephone, terminal equipment

- cable and wire facilities - poles, cable, conduit

(2) **plant non-specific operations**

- provisioning
- power
- plant operations
- network administration
- testing
- engineering
- access expenses

In addition, ARMIS data includes local network service revenues by the following categories:

- Access Revenue - end user, switched and special access revenue
- Basic Service Revenue
- Long Distance Network Revenue

c) Capital Structure Parameters

The Expense Module requires carrier-specific capital structure parameters to calculate the carrier's Weighted Average Cost of Capital ("WACC"), which is a discount factor used to calculate capitalized costs of BNFs. Parameters required are debt-equity ratio, cost of debt and cost of equity.

d) Factors Built Into the Expense Module

The module uses a number of ratios and factors to calculate monthly per-line loop and annual switching costs. These factors are explained in detail in the Key Algorithms section.

COST OF CAPITAL INPUTS

Debt %		0.6182	
Cost of Debt		0.0746	0.046
Equity %		0.3818	
Cost of Equity		0.1125	0.043
Overall Cost of Capital			**8.91%**
Weighted Equity Percent		0.4822	
variable support factor		0.010	
other taxes factor		0.050	
operating state and local income tax factor		0.010	
uncollectibles factor		0.021	*calculated input*
billing/bill inquiry per line per month	$	1.22	
directory listing per line per month	$	0.15	
service order processing fraction of 6623		0.346	
alternative CO switching factor		0.027	
EO traffic-sensitive fraction		0.700	
per-line monthly LNP cost	$	0.25	
tandem-routed toll fraction		0.200	
tandem-routed local fraction		0.400	*from Convergence Module*
interoffice local fraction		0.650	
State		Massachusetts	
Company		NEW ENGLAND TEL CO - MA	
DS-0/DS-1 crossover		9.00	
DS-1/DS-3 crossover		9.00	
Distribution structure fraction assigned to telephone		1.00	
Feeder structure fraction assigned to telephone		1.00	
Local call completion fraction		0.70	
Total local calls attempted		11,203,803,000	
Total intraLATA calls completed		1,274,618,000	
Total interLATA calls completed			
intrastate		273,655,000	
interstate		1,505,021,000	
Total local calls completed		7,842,662,100	
Total completed local interoffice calls		2,204,785,738	

model specific data

ECONOMIC LIFE & TAX INPUTS

tax rate	[illegible]
economic life	years
loop distribution	24
loop feeder	28
loop concentrator	
end office switching	2
wire center	
tandem switching	15
operator investment	13
transport facilities	17
STP	14
SCP	14
links	14
public telephones	9
general support	18

3. Explanation of Key Algorithms

The Expense Module is driven primarily by the calculated annual capital cost and operating expenses of the carrier(s) under study. All costs are summarized for each of the eleven BNFs. The algorithms used to determine these amounts are described below.

a) Capital Costs

The model calculates annual capital cost for each BNF based on the net plant investment, the expected depreciable life, the return on the net asset and the grossed-up income tax on the return of the net asset. The model assumes straight-line depreciation and assumes that cash flows are in arrears (i.e. return from assets, tax gross-ups and depreciation are applied at the end of each year).

The discount rate ("WACC") used in capitalizing annual capital costs is based on the capital structure and the cost of debt and equity for the given entity

The model calculates the investments required for each BNF The model then determines the appropriate life of these investments based on the economic life spans for each of the basic network elements

Once the element's life span has been determined, annual depreciation amounts are calculated (total investment ÷ depreciable life in years) and summarized over the discounting period to determine the annual accumulated depreciation (annual depreciation x equipment life service years). The annual accumulated depreciation is then subtracted from the total investment to determine the Annual Net Asset Amounts.

The return amount from the assets are then calculated by multiplying the Annual Net Asset by the return component of the cost of capital ("WACC"). Then the annual tax gross-up is determined by applying the nominal tax rate to the return amount [((nominal tax rate of 40%) * percent equity * return amount)/(1- nominal tax rate)].

The Total Annual Return is the sum of the annual accumulated depreciation, return on assets and tax gross-up amounts. The Total Annual Return is then discounted over the expected life period to determine the Net Present Value ("NPV") of the Annual Returns.

The last step in the algorithm is to calculate the Levelized Capital Cost and spread this cost over the different density ranges based on the proportion of the total investment associated with that particular density range. This done by dividing the NPV by the Present Value Factor ("PVF"). The PVF equals the sum of the discount factors for each of the years of the equipment's depreciable life. Because the depreciable life varies by network equipment category, it may easily be changed by the user.

The capital cost as a percent of the investment is computed by dividing the Levelized Capital Cost by the total investment.

b) Operating Expenses - General

Operating expenses are derived based on historic expense factors calculated from balance sheet and expense account information reported in each carrier's ARMIS report. These expense factors are applied to the investments developed by the Hatfield Model to arrive at associated operating expense amounts.

For expenses driven by their associated capital investments, these capital investments are used as the basis for expense factor calculations. Other expenses, such as network operations, vary directly with the number of lines provisioned rather than with capital investment. Thus, expense for these elements are driven by the number of access lines supported. Uncollectables, sales and marketing factors are calculated as percentages of revenues.

The Model includes two types of operating expenses network-related and non-network-related. The Expense Module relies on historical data from ARMIS reports filed by the company under study to develop factors that can be applied to the investment outputs of the model to estimate network-related and non-network-related operating expenses in the Hatfield Model.

c) Network-Related Expenses and Expense Factors

The Expense Module assigns network-related expenses to each of eleven Basic Network Functions ("BNFs") plus public telephone terminal equipment. The module also assigns the cost of capital, expenses, total investment and attributable support expense to each BNF.

These operating expenses are added to the annual capital cost derived from the NPV to determine the total Expense Summary for each BNF. Each network-related expense is described below:

Network Support -- This category includes the expenses associated with motor vehicles, aircraft, special purpose vehicles, garage and other work equipment.

Central Office Switching -- This includes end office and tandem switching as well as equipment expenses.

Central Office Transmission -- This includes circuit equipment expenses applied to transport investment.

Cable and Wire -- This category includes expenses associated with poles, aerial cable, underground/buried cable and conduit systems. This expense varies directly with capital investment.

Network Operations -- The Network Operations category includes power, provisioning, engineering and network administration expenses.

d) Non-Network-Related Operating Expenses and Expense Factors

The Expense Module assigns non-network related expenses to each density range based on its proportion to total expenses in each category. Each of these expenses is described below:

Variable support -- Historical variable support expenses for LECs are substantially higher than those of similar service industries operating in more competitive environments. Based on studies of these variable support expenses in competitive industries such as the interexchange industry, the model applies a conservative ten percent (10%) variable support factor. Furthermore, it was verified that the support expenses captured by this factor are genuinely variable with operational scale. A regression analysis

was undertaken utilizing 1995 ARMIS 43-02 Holding Company data This analysis regressed Corporate Operations expense (the dependent variable) as a function of revenues (a surrogate for total costs) less Corporate Operations expense (the independent variable) This analysis demonstrated that fixed support expenses were not statistically significantly different from zero, and that a fixed percentage amount for variable support expense was appropriate.

General Support Equipment -- The Investment Module calculates investments for furniture, office equipment and general purpose computers. The Model uses actual 1994 company investments to determine the ratio of investments in the above categories to total investment. The ratio is then multiplied by the total local service investment estimated by the Model and treats the result as an additional investment needed to provide local service. The recurring costs of these items are then calculated in the same way as recurring costs for investment categories estimated directly by the investment module of the Model.

e) Revenues

The only clearly used revenue figure is that for calculating the uncollectables factor. This factor is a ratio of uncollectable expense to adjusted net revenue.

4. Outputs of the Expense Module

Results of the Expense Module are displayed in a series of reports which depict detailed investments and expenses for each BNF for each density range, summarized investments and expenses for all BNFs, unit costs by BNF and total annual and monthly network costs. These are presented in Section IV, below.

Basic Network Function (BNF) outputs

The Hatfield Model produces cost estimates for eleven Basic Network Functions ("BNFs"), plus public telephone terminal equipment. These BNFs represent an unbundling of the local exchange network into discrete functions, which can be used singly or in combination to furnish services. The BNFs are described below and their inter-relationships are illustrated in Figure 7.

1. *Loop Distribution* -- The individual communications channel to the customer premises originating from the DLC remote terminal or SAI and terminating at the first point of termination at the customer's premises. In the Hatfield Model, this BNF also includes the investments in NID, drop and terminal/splice.

2. *Loop Concentrator/Multiplexer* -- The DLC remote terminal at which individual subscriber traffic is multiplexed/de-multiplexed and connected to loop distribution for

termination at the customer's premise The Hatfield Model DLC equipment investment in this BNF

3 *Loop Feeder* -- The facilities on which subscriber traffic is carried from the line side of the wire center switch to the Loop Concentration facility The BNF includes copper feeder and fiber feeder cable, plus associated structure investments (poles, conduits, etc.)

4 *End Office Switching* -- The facility which provides the functionality required to connect appropriate lines or trunks to and from a desired communications path at the first point of switching. This functionality include such things as testing, translation and routing. As modeled in the Hatfield Model, this BNF includes the end office switching machine investments and associated wire center costs, including distributing frames, power and land and building investments.

5. *Operator Systems* -- The systems that provide for the processing and recording of special toll calls, public telephone toll calls and other types of calls requiring operator assistance, as well as Directory Assistance. The investments identified in the Hatfield Model for the Operator Systems BNF include the operator positions (e.g., personal computers), operator tandem investments (including required subscriber databases), wire center and operator trunks.

6. *Dedicated Transport* -- The full period, bandwidth specific interoffice transmission path between LEC wire centers or between LEC wire centers and an IXC Point of Presence ("POP"). It provides the ability to send individual and/or multiplexed switched and special services traffic between wire centers. Interoffice transport investments that provide dedicated transport are assigned to this BNF.

7. *Common Transport* -- A switched trunk between two switching systems on which traffic is commingled to include traffic to and from multiple IXCs, as well as LEC traffic. These trunks may originate at an end office and terminate at a tandem switch, or at another end office. Interoffice transport investments that provide common transport are assigned to this BNF.

8. *Tandem Switching* -- The facility that provides the function of connecting trunks to trunks for the purpose of completing inter-switch calls. Similar types of investments as are included in the End Office Switching BNF are also reflected in the Tandem Switching BNF.

9. *Signaling Links* -- Transmission facilities in a signaling network which carry all out-of-band signaling traffic between the switches and STPs, between STPs and between STPs and SCPs. Signaling link investment is developed by the Hatfield Model and assigned to this BNF.

10 *Signal Transfer Point ("STP")* -- This facility provides the function of routing TCAP and ISUP messages between network nodes (end offices, tandems and SCPs). The Model estimates STP investment and assigns it to this BNF.

11 *Service Control Point ("SCP")* -- The node in the signaling network to which requests for service handling information (e.g., translations for local number portability), are directed and processed. The SCP contains service logic and customer specific information required to process individual requests. Estimated SCP investment is assigned to this BNF.

Figure 8 Local Exchange Basic Network Functions

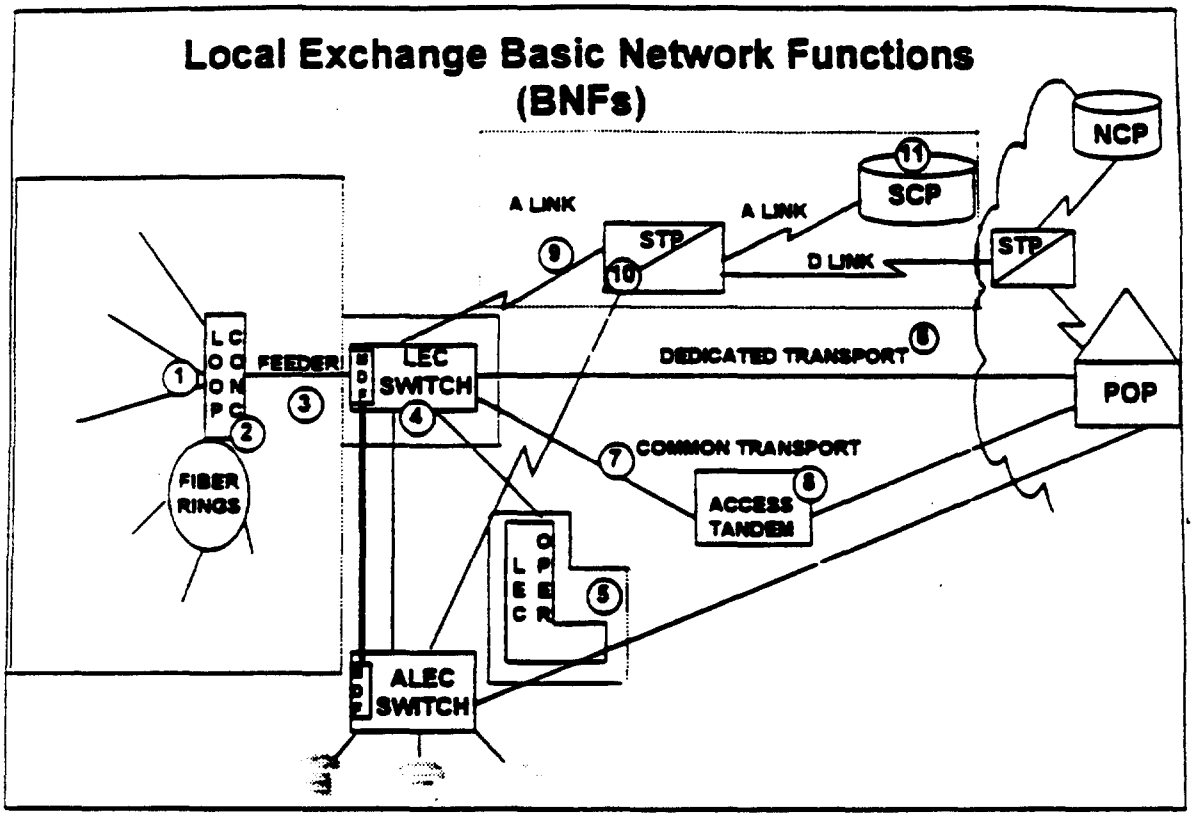

IV. ILLUSTRATIVE MODEL RESULTS

A. OVERVIEW

This section displays illustrative outputs of the HM. The main outputs exhibited are the TSLRICs of the eleven BNFs, the unit volumes of these BNFs and the monthly TSLRIC per unit of these BNFs. These outputs are further disaggregated across density zones for the loop BNFs.

The unit TSLRIC of the BNFs are then processed to develop an estimate of the unit TSLRIC of the collection of these BNFs that comprise switched local service and carrier access service

There are several reasons why a TSLRIC for switched local service plus carrier access is not the simple sum of the complete collection of BNFs. This is due largely to the fact that the LEC's network TSLRICs also include the costs of providing narrowband special access loops and the interoffice transport associated with these dedicated loops. Thus, while all of the local switching TSLRIC, all of the common transport and tandem switching TSLRICs and all of the signaling and operator systems TSLRICs are properly attributable to switched service; only a portion of the loop and dedicated transport TSLRICs are so attributable.

Outputs from the Line Multiplier Module and the Wire Center Module are used to determine the portions of loop costs and dedicated transport costs that are attributable to nonswitched local services. The remaining costs that are associated with switched service TSLRIC are then displayed.

B. ILLUSTRATIVE OUTPUT

Table 23 displays illustrative results from the HM for Pacific Bell-California.

Table 23 Unit Cost by Network Element -- Pacific Bell - California

Loop Elements	0 - 5 hh/mi2	5 - 200 hh/mi	200 -650 hh/mi	650 - 850 hh/mi2	850 - 2550 hh/mi2	> 2550 hh/mi2	Totals
Loop Distribution							
Annual Cost	$42,069,613	$170,326,755	$117,488,134	$41,617,759	$365,365,318	$545,637,407	$1,282,504,986
Units	109,113	1,288,296	1,451,816	584,063	5,367,413	8,634,088	17,434,788
Unit Cost/month	$32.13	$11.02	$6.74	$5.94	$5.67	$5.27	$6.13
Loop Concentration							
Annual Cost	$11,970,421	$63,182,353	$54,420,087	$18,399,339	$120,085,198	$103,851,184	$371,908,583
Units	109,113	1,288,296	1,451,816	584,063	5,367,413	8,634,088	17,434,788
Unit Cost/month	$9.14	$4.09	$3.12	$2.63	$1.86	$1.00	$1.78
Loop Feeder							
Annual Cost	$2,085,245	$5,030,115	$5,331,057	$2,615,247	$47,277,814	$94,858,571	$157,198,050
Units	109,113	1,288,296	1,451,816	584,063	5,367,413	8,634,088	17,434,788
Unit Cost/month	$1.59	$0.33	$0.31	$0.37	$0.73	$0.92	$0.75
Total Loop							
Annual Cost	$56,125,280	$238,539,223	$177,239,278	$62,632,345	$532,728,330	$744,347,163	$1,811,611,619
Units	109,113	1,288,296	1,451,816	584,063	5,367,413	8,634,088	17,434,788
Unit Cost/month	$42.86	$15.43	$10.17	$8.94	$8.27	$7.18	$8.66
Total Lines	109,113	1,288,296	1,451,816	584,063	5,367,413	8,634,088	17,434,788

Table 23 (continued) Unit Cost by Network Element -- Pacfic Bell - California

	Annual Cost	Units		Unit Cost	
End office switching	$655,911,223				
1. Port	$196,773,367	14,947,269	Switched lines	$1.10	per line/month
2. Usage	$459,137,856	238,082,755,975	Minutes	$0.00193	per minute
Signaling network	$44,560,625				
1. Links	$810,305		Link	$43.68	per link per month
2. STP	$33,216,716	178,488,411,302	TCAP+ISUP messages	$0.00019	per message
3. SCP	$10,533,603	12,052,424,400	TCAP messages	$0.00087	per message
Transport network					
1. Dedicated	$761,329,168	3,559,399	Trunks	$427.79	per DS-1 equivalent/month
Switched	$229,267,234	1,071,880	Trunks	$0.00177	per minute
Special	$532,061,934	2,487,519	Trunks	10,044	Trunk-minutes/month
2. Common	$64,108,935	55,739,855,180	Minutes	$0.00173	per minute per leg (orig or term)
3. Tandem switch	$109,328,741	30,459,521,088	Minutes	$0.00359	per minute
Operator systems	$15,296,019				
Total	$3,290,378,539				
Total cost per switched line	$14.89	per line/month			

C. DISCUSSION

Examination of these numeric results suggests that the derivation of the cost of tandem switching should be reviewed. This is because the reported unit cost of tandem switching exceeds the unit cost of end office switching. If revisions to the model are necessary to address properly this issue, this modeling will be updated.

In addition, one of the strengths of this model is its flexible ability to accept newly available data and/or modeling logic flows. As a result, as additional data become available, or new modeling demands are identified, HAI will enhance this tool.

Appendix 1

PRINCIPLES TO GUIDE STUDIES OF LOCAL EXCHANGE TOTAL SERVICE LONG-RUN INCREMENTAL COST (TSLRIC)

1. **TSLRIC measures only the long-run costs of providing the element in question.**
   Costs must be measured over a sufficiently long period of time so that any element-specific costs become variable.

2. **TSLRIC measures only the *forward-looking* costs of providing the element in question.**
   TSLRIC must measure forward-looking costs, not historic, embedded or book costs. Economic costs are forward-looking and are based on the most efficient generally available technology.

3. **TSLRIC is based on the costs that an *efficient, cost-minimizing* competitor would incur -- i.e., the costs of assets that are optimally configured, sized and operated.**
   Proper measures of TSLRIC must exclude the costs of inefficient design or operations, because those costs cannot be recovered in competitive markets and would weaken incentives for LECs to operate efficiently.

4. **TSLRIC includes only the *additional* costs of providing the particular network element(s), holding constant the supplier's output of all other items.**
   TSLRIC includes only those added costs that are attributable to production of the network element(s). Costs that are properly attributable to *other* outputs of the LEC, or costs that are fixed and shared with other network elements so that they would be incurred even if the network element(s) were not supplied, are excluded from TSLRIC.

5. **TSLRIC is based on the entire demand of *all* uses and users of a network element.**
   TSLRIC includes the economic costs of serving the total demand of all uses and users of a network element, including the demand of the supplying LEC.

6. **TSLRIC should reflect any significant geographic cost differences.**
   TSLRIC estimates should reflect any significant geographic differences in cost, to the extent that these cost differences are reliably measurable.

Definitions of the above cost terms are supplied in Appendix 2 to this document.