Switching and wire center investment -- This category includes investment in local and tandem switches, along with associated investments in wire center facilities, including buildings, land, power systems and distributing frames.

Signaling network investment -- This includes investment in STPs, SCPs and signaling links.

Transport investment -- This category consists of investment in transmission systems supporting local interoffice (tandem and direct) trunks, intraLATA toll trunks (tandem and direct) and access trunks (tandem and direct). The model also separately calculates investment in operator trunks.

Operator Systems investment -- This includes investments in operator systems positions and operator tandems. The module allows the operator positions to be located at a distance from the operator tandem.

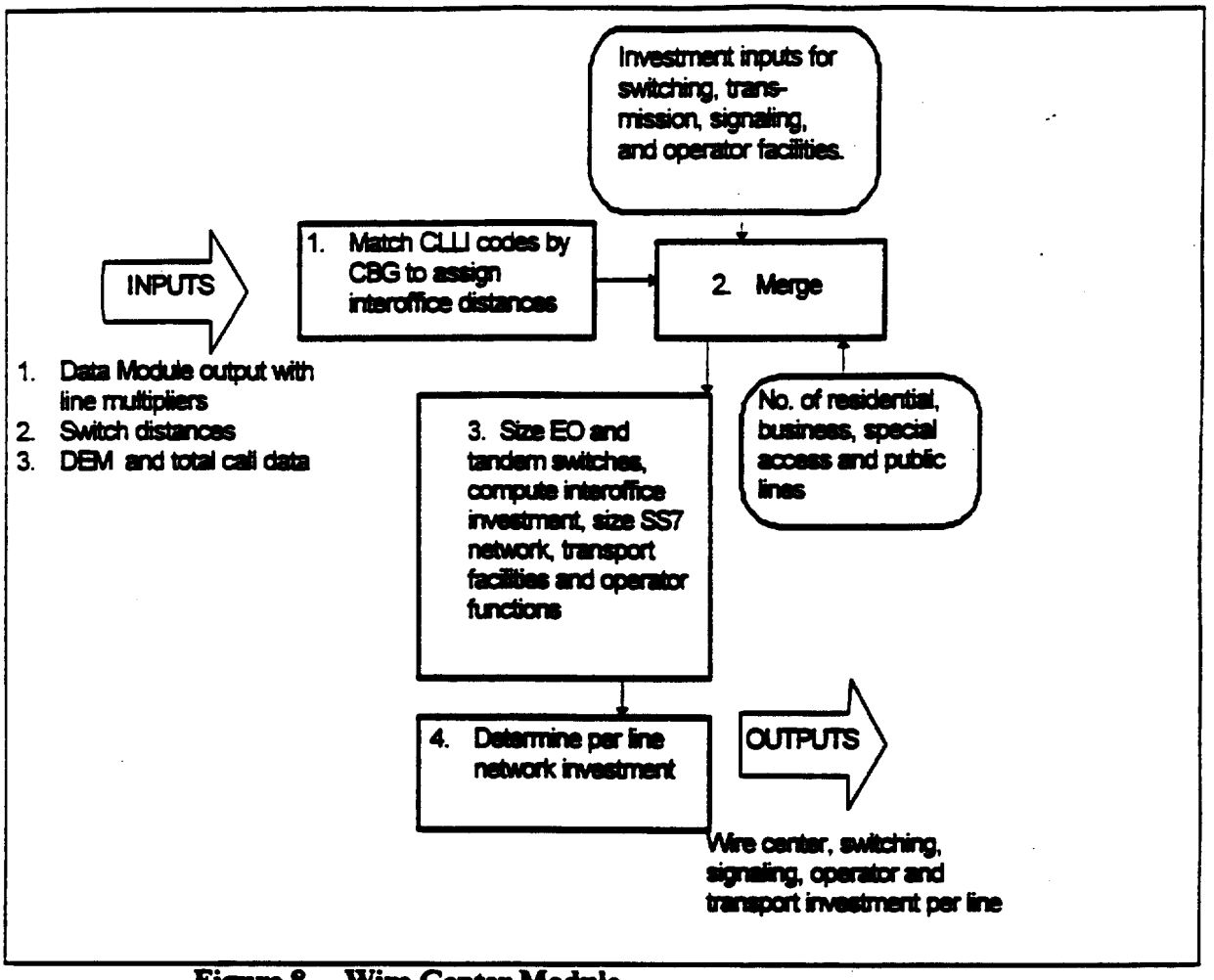

Figure 8 Wire Center Module

b) Description of inputs and assumptions

For the wire center module to compute required switching and transmission investments, it must have as inputs total line counts for each wire center, interoffice distances, traffic peakedness assumptions, as well as inputs describing the distribution of total traffic among local intraoffice, local interoffice, intraLATA toll, interexchange access and operator services. This module takes as data inputs overall line counts obtained from the Line Converter Module and interoffice distances for the calculation of transmission facilities investment.[25]

25 The HM2.2.2 includes a set of interoffice distance calculations produced from wire center location information from Bellcore's Local Exchange Routing Guide (LERG). Because AT&T has now gained a site license for use of these data, users of the Hatfield Model no longer need to obtain their own copies of the LERG.

There are many user-adjustable input assumptions in the Wire Center module. The following sections discuss these assumptions, and Appendix C includes additional tables showing all of the default values for the module's input parameters.

c) Traffic assumptions

Many of the calculations in the Wire Center module rely on traffic assumptions suggested in Bellcore documents.[26] These inputs, which the user may alter, assume 1.3 busy hour call attempts (BHCA) per residential line and 3.5 BHCA per business line. Total busy hour usage is then determined based on published Dial Equipment Minutes (DEM) information. Other inputs, which may be changed by the user, specify the fraction of traffic that is interoffice, the fraction of traffic that flows to operator services, the local fraction of overall traffic, as well as breakdowns between direct-routed and tandem-routed local, intraLATA toll, and access traffic. Appendix C contains tables showing the default settings for these parameters.

d) Explanation of calculations

The following sections describe the calculations used to generate investments associated with switching, wire centers, interoffice transport, signaling and operator systems functions.

(1) Switching investment calculations

The Module places at least one end office switch in each wire center. It sizes the switches placed in the wire center by adding up all the switched lines in the CBGs served by the wire center, then compares this line total to the maximum allowable switch line size. This parameter is user-adjustable, but its default setting is at 100,000 lines with a fill factor of 0.80, yielding a maximum effective switch line size of 80,000. By default, the model will equip the wire center with a single switch if the number of switched access lines served by the wire center is no greater than 80,000. If a wire center serves 90,000 lines, the model will compute the investment required for two 45,000 line switches.[27] The wire center module also compares the BHCA produced by the mix of lines served by each switch with a user-adjustable processor capacity (default set at a maximum of 600,000 BHCA) to determine whether the switch is line-limited or processor real-time-limited.

---

26 Bell Communications Research, *LATA Switching Systems Generic Requirements, Section 17: Traffic Capacity and Environment*, TR-TSY-000517, Issue 3, March 1989.

27 If multiple switches are required in the wire center, they are sized equally to allow for maximum growth on both switches.

Once the model determines the end office switch line size, it calculates the required investment per line from an investment function that relates per-line switching investment to switch line size. The data defining this function were obtained from a publicly-available study of the central office equipment market published annually by McGraw-Hill.[28] This study shows the average investment per new line of digital switching paid by BOCs to be $102, and by independents to be $235, in 1995.[29] The model combined these figures with average BOC (11,200) and independent (2,761) switch line sizes derived from data published in the FCC's *Statistics of Communications Common Carriers*, along with information on much larger switches obtained from switch manufacturers to develop the complete investment function.[30] The above per-line investment figures are for the entire end office switch, including trunk ports. These investment figures are then reduced by $16 per line to remove trunk port investment that will be accounted for in the module's trunk calculations. Figure 9 shows the resulting investment curve.

28 Northern Business Information study: *U.S. Central Office Equipment Market – 1995*, McGraw-Hill.

29 These per-line average prices represent investments over all types of switching, including remote switching systems, hosts, and stand-alone end office switches. Through this scaling, the switching investment curve thus represents automatically the cost of the average profile of remote, host, and stand-alone applications of end office switches.

30 Federal Communications Commission, *Statistics of Communications Common Carriers*, Tables 2.3 and 2.4, 1994 edition.

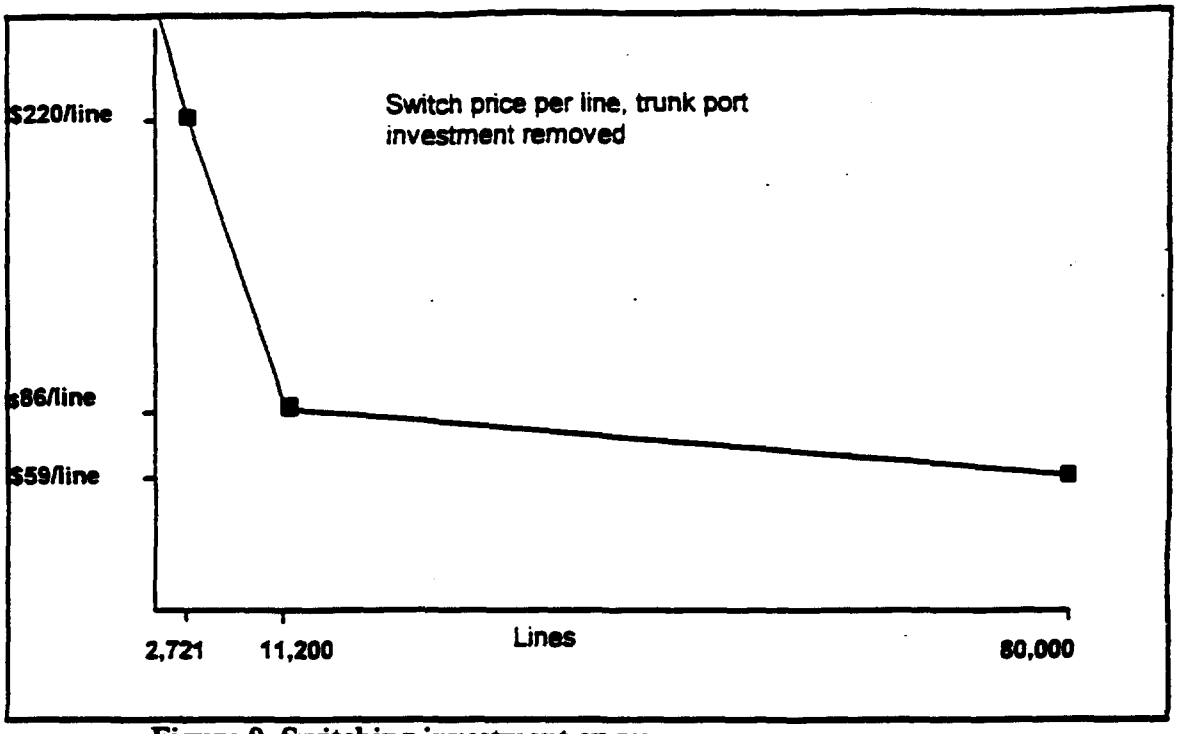

Figure 9 Switching investment curve

The wire center module uses existing tandem and end office wire center locations for computing interoffice transmission investments. A preprocessing step, relying on licensed LERG data, produces end office-to-tandem, end office-to-STP, tandem-to-STP, and STP-to-STP distances in a table that then is used by the module to estimate interoffice transmission facility investments. The module computes investments for end office and tandem "A" signaling links, "C" signaling links between the STPs in a mated pair, and it estimates investments in "D" signaling link segments that an interconnecting carrier such as an IXC may lease from the ILEC.

Tandem and operator tandem switching investments are computed according to assumptions contained in an AT&T report on interexchange capacity expansion costs filed with the FCC.[31] The investment calculation assigns a price to switch "common equipment," switching matrix and control structure, and adds to these amounts the investment in trunk interfaces. The numbers of trunks and their related investments, are derived from the transport calculations described below. The module recognizes that a significant fraction of local tandems also perform end office switching functions, and the inputs allow the user to vary the

31 AT&T, "An Updated study of AT&T's Competitors' Capacity to Absorb Rapid Demand Growth," filed with the FCC in CC Docket No. 79-252, April 24, 1995 ("AT&T Capacity Cost Study").

sharing of tandem common equipment with end office use. The default sharing value is 40%.

Wire center investments required to support end office and tandem switches are based on assumptions regarding the size of room required to house a switch (for end offices, this size varies according to the line sizes of the switch), construction costs, lot sizes, land acquisition costs and investment in power systems and distributing frames. The default values are shown in Appendix C.

The model computes required wire center investments separately for each switch. For wire centers housing multiple end office switches, the wire center investment calculation adds switch rooms to house each additional switch. Tandem wire center calculations assume the maximum switch room size, and further assume the tandem will reside in a wire center that contains at least one end office switch.

(2) Transport calculations

The traffic and routing assumptions listed above, along with the total mix of access lines served by each switch, form the basis for the model's transport calculations. The model determines the overall breakdown of traffic per subscriber according to the traffic assumptions and computes the numbers of trunks required to carry this traffic. These calculations are based on the fractions of total traffic assumed for interoffice, local direct routing, local tandem routing, intraLATA direct and tandem routing and access direct and tandem routing. These traffic fractions are applied to the total traffic generated in each wire center according to the mix of business and residential lines and appropriate per-line offered load assumptions. These trunk loading assumptions include a user-adjustable maximum trunk utilization of 27.5 CCS in the busy hour.[32]

The distance preprocessing calculations estimate interoffice distances using existing wire center and tandem locations. The calculation assumes rectilinear routing between end offices and tandems, and between switches and STPs. The resulting distances are greater than if they were calculated as airline mileage.

Average direct-route distances for local, intraLATA and access traffic are set as user-definable inputs. It is not possible to compute these values from wire center locations because existing exchange area definitions determine whether routes will carry local, intraLATA toll, or access traffic. In addition, the locations

32 The 27.5 CCS value is based on an AT&T estimate of maximum per trunk utilization. See, AT&T Capacity Cost Study.

of IXC POPs may not be publicly available. Because of these factors, the default distances for direct transport are 10 miles for local routes, 25 miles for intraLATA routes, and 15 miles for access routes. The user may alter these values.

The model contains explicit transport facilities investment calculations to produce both termination and per-mile investments, each expressed per DS-0 (a 64 kbps voice-equivalent circuit). The assumptions underlying these calculations include the facilities capacity expressed at a default SONET transmission rate of OC-12, multiplexer installed price per end, regenerator spacing and investment, buried/underground/aerial composition, manhole spacing and investment, pole spacing and investment, along with ancillary investments such as splicing, optical patch panels, and "pigtail" (short connectorized fibers between strands in the cable and the optical patch panel) investment. Interoffice investment calculations also include a "sharing" factor that accounts for the sharing of structure used by feeder and interoffice facilities. This eliminates double-counting of structure between feeder and interoffice routes. The amount of sharing, expressed as a percentage of interoffice route miles, is a user-adjustable input. The default value is 25%.

(3) Tandem switch calculations

The module scales the investment in tandem switch common equipment according to the total number of tandem trunks computed for the study area. By doing so, it thus avoids equipping maximum-capacity tandems whenever a LATA is served by multiple tandems. The calculations also recognize that a significant fraction of tandems in practice are "Class 4/5" offices that serve both tandem and end office functions. A sharing fraction may be set by the user to reflect the incidence of such dual-purpose switches.

(4) Signaling network calculations

The Wire Center Module uses the preprocessed interoffice distances to compute signaling link investment for end office and tandem A links, C links between the STPs in a mated pair, and D link segments. The investment per link-mile is the same as the computed per-DS-0 investment described above.

The model always equips at least two signaling links per switch. It also computes required SS7 message traffic according to the call type and traffic assumptions described earlier. User inputs define the number and length of ISDN User Part (ISUP) messages required for interoffice call control. Default values are six messages per interoffice call attempt with twenty-five octets per message. These values are those assumed in the AT&T Capacity Cost Study.

Other inputs define the number and length of Transaction Capabilities Application Part (TCAP) messages required for database lookups, along with the

percentage of calls requiring TCAP message generation. Default values, also obtained from the AT&T Capacity Cost Study, are two messages per transaction, at 100 octets per message, and 10% of all calls requiring TCAP generation. If the message traffic from a given switch exceeds the link capacity (also user-adjustable and set at 56 kbps and 40% occupancy as default values), the model will add links to carry the computed message load. The total link distance calculation includes all the links required by a given switch.

STP capacity is expressed as the total number of signaling links each STP in a mated pair can terminate (default value is 720 with an 80% fill factor). The maximum investment per STP pair is set at $5 million, and may be changed by the user. These default values derive from the AT&T Capacity Cost Study. The STP calculation scales this investment based on the number of links the model requires to be engineered for the study area.

SCP investment is expressed in terms of dollars of investment per transaction per second. The transaction calculation is based on the fraction of calls requiring TCAP message generation, The total TCAP message rate in each LATA is then used to determine the total SCP investment. The default SCP investment is $20,000 per transaction per second and is based on a number reported in the AT&T Capacity Cost Study.

(5) Operator systems calculations

Operator tandem and trunk requirements are based on the operator traffic fraction inserted by the user into the model and on the overall maximum trunk occupancy value of 27.5 CCS discussed above. Operator tandem investment assumptions are the same as for local tandems.

Operator positions are assumed to be based on current personal computer terminal technology. The default operator position investment is $3500. The Model includes assumptions for maximum operator "occupancy" expressed in CCS. The default assumption is that each position can be in service 27.5/36 of the busy hour. This value is related to the maximum trunk occupancy assumption described above. Also, because many operator services traditionally handled by human operators may now be served by announcement sets and voice response systems, the model includes a "human intervention" factor that reflects the fraction of calls that require human operator assistance. The default factor is 10, which is believed to be a conservative estimate. (A factor of ten implies that one out of ten calls will require human intervention).

6. Convergence module

The Convergence Module combines the loop cable investments produced by BCM-PLUS with the wire center, switching, transport, signaling and operator

systems investments calculated by the Wire Center Investment Module. The output of the Convergence Module is the complete collection of network investments stated by density range for use by the Expense module.

The module adds structure investment to the loop cable investments produced by the Loop Module based directly on the number of sheath miles of cable to be installed. The previous version of the Hatfield Model relied on BCM estimates of loop structure components which were calculated by applying "cable multipliers" to loop cable investment. The cable multipliers produced estimates of structure that varied directly with cable investment. In some cases, the structure estimates per unit length were unacceptably low. The multiplier approach also improperly made structure investment a function of cable materials price discounts.

In Release 2, the Convergence Module includes user-defined inputs for conduit investment, pole investment and spacing, manhole investment and spacing, trenching and direct burial investment, and breakdowns of aerial, buried, and underground cable. Although the Loop Module cable investment inputs include values for aerial and underground cable, where buried cable is required the Convergence Module adds an incremental amount per foot to represent the increased investment in armoring that is characteristic of cable intended to be directly buried. The default assumptions, which vary by density range, appear in Appendix C. There are separate sets of default inputs for distribution, copper feeder and fiber feeder facilities.[33]

The following tables display the default values for structure type:

Distribution Structure			
Density Range	Aerial Fraction	Buried Fraction	Underground Fraction
0 - 5	0.50	0.50	-
5 - 200	0.50	0.50	-
200 - 650	0.50	0.50	-
650 - 850	0.50	0.50	-
850 - 2550	0.40	0.50	0.10
> 2550	0.65	0.05	0.30

33 The HM2.2.2 Convergence Module still performs certain loop-related calculations. These were originally included in this module to correct deficiencies in the initial BCM loop calculations. HAI has chosen to keep these additional calculations in the Convergence Module even after the incorporation of BCM-PLUS into HM2.2.2.

Copper Feeder Structure			
Density	Aerial Fraction	Buried Fraction	Underground Fraction
0 - 5	0.50	0.45	0.05
5 - 200	0.50	0.45	0.05
200 - 650	0.50	0.45	0.05
650 - 850	0.40	0.40	0.20
850 - 2550	0.10	0.10	0.80
> 2550	0.05	0.05	0.90

Fiber Feeder Structure			
Density Range	Aerial Fraction	Buried Fraction	Underground Fraction
0 - 5	0.35	0.60	0.05
5 - 200	0.35	0.60	0.05
200 - 650	0.35	0.60	0.05
650 - 850	0.20	0.60	0.20
850 - 2550	0.10	0.10	0.80
> 2550	0.05	0.05	0.90

The Convergence Module adds several components to the loop cable investments produced by the Loop Module: NIDs, SAIs, terminals and subscriber drops. The drop and terminal/splice values are added for each line directly. The model computes one NID per household and one NID for every four (a user-adjustable value) business lines. The default per-unit investments are $30 for the NID (obtained from discussions with subject matter experts); $40 for the drop (taken from the New England Telephone Incremental Cost Study[34]), and $35 for the terminal and splice.

The SAI investments depend on whether copper or fiber feeder cable feeds a particular CBG. If the feeder cable is copper, the SAI is a simple cross-connect arrangement. This arrangement's investment is obtained from a table listing SAI installed prices by total lines served. For optical feeder cable, the SAI consists of an optical patch panel for connecting the cable to the remote terminal, along with an associated cross-connect for connecting the subscriber loops to the analog side of the remote terminal. Investment assumptions for both types of SAIs include engineering, a housing, and site preparation, along with common equipment and

[34] NYNEX, 1993 New Hampshire Incremental Cost Study

per-line investments in channel units. A separate fill factor applies to the number of lines served by each set of common equipment.

Structure investment (*i.e.*, poles, conduit, trenches, and manholes) generally are shared among utilities, typically LECs, CATV operators, electric utilities, and others, including competitive access providers (CAPs) and IXCs. To the extent that several utilities may place cables in common trenches, conduits or on common poles, it is appropriate to share the costs of these structure items among them. Because the Convergence Module reports investments in different structure separately to the Expense Module, the user may select the fraction of each type of distribution and feeder structure investment that should be assigned to local telephone service.

The Convergence Module also adds investment for integrated DLC equipment. Inputs include site and power, common equipment, and per-line investment in channel units. The module allows two types of DLC equipment as described in the Release 1 documentation: TR-303-compatible SLC®-2000 equipment, used in all but the lowest density zone, and proprietary equipment manufactured by Advanced Fibre Communications, a California company, in the 0-5 lines per square mile range.

The Convergence Module produces investments in the following categories for each of the six density ranges:

- Distribution (aerial, buried, and underground copper cable and associated structure)
- Concentration (DLC remote terminal and associated investment in power, site preparation, and housing)
- Feeder (aerial, buried and underground fiber and copper feeder cable and associated structure)
- Switching (end office and tandem switching investment)
- Wire center (end office and tandem wire center investment)
- Operator services (operator tandem switching, tandem wire center, trunks and operator positions)
- Transport (common and dedicated)
- STPs
- SCPs
- Signaling links
- NID, drop, terminal and splice, and SAI

In addition, the Convergence Module output sheet summarizes line and trunk counts, and passes other parameters, such as tandem routing fractions and DEMs, to the Expense Module. Line counts include residential, business, special access and public access lines, and the module also reports households in each density range.

7. Expense Module

a) Overview

The Expense Module provides per-line and per-month cost summaries for each unbundled network element defined by the model, and for basic universal service. It does so by calculating capital carrying cost, operating expenses, network operation expenses, and attributable support expenses for each of eleven UNEs plus public telephone terminal equipment.

The Expense Module uses the output of the Convergence Module to capitalize the investments needed for each UNE and the per-line investments for basic universal service. The module requires investment, revenue and expense data reported by individual LECs in their annual ARMIS reports. The Module's other required inputs are capital structure parameters (e.g., debt/equity ratio, costs of debt and equity) as well as the total network investment produced by the Convergence Module.

The Expense Module uses ARMIS data to calculate several expense-to-investment ratios to be applied to the investments in different plant categories as computed by the model. It also uses estimates of LEC revenues, tax rates, costs of debt and equity and economic service lives for various types of network equipment.

This section describes the inputs and assumptions of the Expense Module, including ARMIS data, capital structure parameters and expense factors built into the module. It also explains the calculations used to determine capital costs and operating expenses.

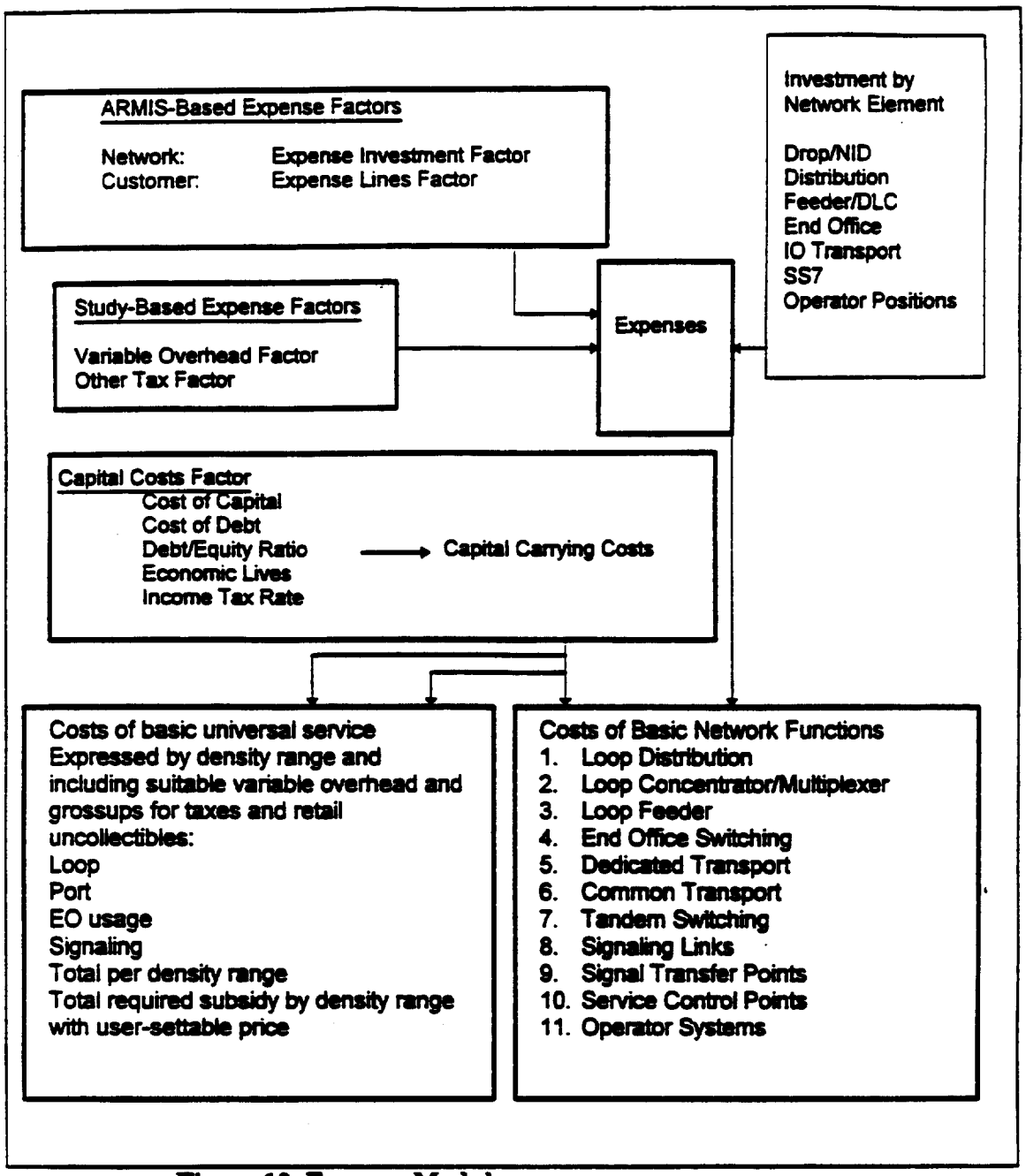

Figure 10 Expense Module

b) Description of inputs and assumptions

(1) ARMIS data

The ARMIS data used in the Expense Module include investment and operating expenses and revenues for a given local carrier and state. These data are used to derive the total investments, expenses and revenues for each UNE. The

investment, expense and revenue categories are listed below, and described in detail in the Calculations section.

(a) plant specific operations

- end office and tandem switching -- digital switching, operator systems
- transmission -- circuit equipment, transmission
- information origination and termination -- public telephone, terminal equipment
- cable and wire facilities -- poles, cable, conduit

(b) plant non-specific operations

- provisioning
- power
- plant operations
- network administration
- testing
- general support equipment -- land, buildings, vehicles, furniture, office and other equipment

In addition, ARMIS data include local network service revenues by the following categories:

- access revenue -- end user, switched and special access revenue
- basic service revenue
- long distance network revenue

(c) Capital structure parameters

The Expense Module requires capital structure parameters to calculate the carrier's Weighted Average Cost of Capital (WACC), which is a discount factor used to calculate capitalized costs of UNEs and basic local service. Parameters required are for the carrier's debt/equity ratio, cost of debt, and cost of equity.

(d) Factors built into the expense module

The module uses a number of ratios and factors to calculate monthly per-line loop and annual switching costs. These factors are explained in detail in the Calculations section.

(e) Other user inputs

There are several explicit user inputs to the Expense Module, including economic lives by plant category, variable overhead factor, forward-looking Network Operations expense reduction factor, similar forward-looking expense factors for switching and circuit equipment, other taxes (principally franchise fees), and structure assignment factors. The model uses the latter to assign structure investment to telephone subscribers. Generally, plant structure (conduit, poles, and trenches) will be shared by several service providers. The structure assignment parameters in the Expense Module allow the user to vary the amount of structure investment for aerial, underground, and buried feeder and distribution facilities assigned to telephone users. The default value is 0.33 for all categories.

Other user inputs include an explicit value for the monthly cost per line for local number portability (set at a default of $0.25/line/month), a quantity used in estimating basic local service monthly costs. There is also a monthly factor of $1.22 per line that accounts for bill generation and bill inquiries relating to basic local service. The model includes a value for the NID's annual maintenance expense, the default is $3.00 per NID. There is an input for carrier-to-carrier customer expense, set at $1.56 per line per year, which is used in the determination of UNE costs. This default value derives from Tier 1 LEC expenses for servicing the access accounts of their IXC customers reported in ARMIS 43-04 for 1995.

Appendix C shows all user inputs to the Expense Module.

c) Explanation of calculations

The Expense Module is driven primarily by the calculated annual capital cost and operating expenses of the carrier(s) under study. All costs are summarized for each of the eleven UNEs. The algorithms used to determine these amounts are described below.

(1) Capital costs

The model calculates annual capital cost for each UNE based on the net plant investment, the expected service life (depreciation), the return on the net asset and the grossed-up income tax on the return of the net asset. The model assumes straight-line depreciation and assumes that cash flows are in arrears (*i.e.*, return from assets, tax gross-ups and depreciation are applied at the end of each year).

The WACC, the capital structure, and the cost of debt and equity must be provided for the modeled entity. Based on these data, the model calculates the investments required for each UNE. The model then determines the appropriate levelized monthly cost of these investments based on the economic lives for each of the UNEs.

(2) Operating Expenses - General

Operating expenses are derived from historic expense factors which are calculated from balance sheet and expense account information reported in carriers' ARMIS reports. These expense factors are applied to the investments developed by the Hatfield Model to determine associated operating expense amounts.

Certain expenses, particularly those for network maintenance, are strongly related to their associated capital investments. The Expense Module estimates these expenses using factors computed from the carrier's ARMIS reports. Other expenses, such as network operations, vary directly with the number of lines provisioned rather than with capital investment. Expenses for these elements are scaled by the number of access lines supported. Uncollectibles expense is calculated as a percentage of revenues.

(3) Network-Related Expenses and Expense Factors

The Expense Module assigns network-related expenses to each of eleven UNEs, plus public telephone terminal equipment. The module also assigns the cost of capital, expenses, total investment and attributable support expense to each UNE.

These network and non-network operating expenses are added to annual capital costs to determine the total economic cost of each UNE. Each network-related expense is described below:

Network Support -- This category includes the expenses associated with motor vehicles, aircraft, special purpose vehicles, garage and other work equipment.

Central Office Switching -- This includes end office and tandem switching, as well as equipment expenses.

Central Office Transmission -- This includes circuit equipment expenses associated with transport investment.

Cable and Wire -- This category includes expenses associated with poles, aerial cable, underground/buried cable and conduit systems. This expense varies directly with capital investment.

Network Operations -- The Network Operations category includes power, provisioning, engineering and network administration expenses.

The Expense Module uses specific forward-looking expense factors for digital switching and for central office transmission. These values derive from the New England Telephone Incremental Cost Study. The module similarly computes forward-looking Network Operations expenses based on corresponding ARMIS-

reported expenses. Because total Network Operations expense is strongly line-dependent, the model computes this expense as a per-line additive value based on ARMIS-reported total Network Operations expense divided by the number of access lines, then deducting 30% of this quotient to produce a forward-looking estimate.[35]

(4) Non-network-related operating expenses and expense factors

The Expense Module assigns non-network related expenses to each density range based on its proportion to total expenses in each category. Each of these expenses is described below.

Variable support -- Historical variable support expenses for LECs are substantially higher than those of similar service industries operating in more competitive environments. Based on studies of these variable support expenses in competitive industries, such as the interexchange industry, the model applies a conservative 10% variable support factor to the total costs estimated for UNEs as well as basic local service.

General Support Equipment -- The module calculates investments for furniture, office equipment and general purpose computers. The Model uses actual 1995 company investments to determine the ratio of investments in the above categories to total investment. The ratio is then multiplied by the network investment estimated by the Model to produce the investment in general support equipment. The recurring costs of these items are then calculated in the same way as recurring costs for network investment.

(5) Revenues

Revenues are used to calculate the uncollectibles factor. This factor is a ratio of uncollectibles expense to adjusted net revenue. The module computes both retail and wholesale uncollectibles factors. The retail factor is applied to basic local telephone service monthly costs and the wholesale factor used in the calculation of UNE costs.

d) Outputs of the Expense Module

The Expense Module displays results in a series of reports which depict detailed investments and expenses for each UNE for each density range, summarized investments and expenses for all UNEs, unit costs by UNE and total

35 Although forecasting forward-looking expenses is difficult, there is evidence that the 30% reduction from currently reported per-line Network Operations expense is conservative. Testimony before the California Public Utilities Commission (Testimony of R. L. Scholl, Universal Service Proxy Cost Models, April 17, 1996, p. 11) states that Pacific Bell's forward-looking Network Operations expenses are 55% less than current per-line values computed from Pacific Bell's 1994 ARMIS data.

annual and monthly network costs, as well as basic local service costs per household.

(1) Unbundled Network Elements outputs

The Hatfield Model produces cost estimates for eleven UNEs, plus public telephone terminal equipment. These UNEs represent an unbundling of the local exchange network into discrete functions, which can be used singly or in any combination to furnish services. The UNEs are described below and their inter-relationships are illustrated in Figure 11.

Loop Distribution -- The individual communications channel originating from the DLC remote terminal or SAI and terminating at the customer's premises. In the Hatfield Model, this UNE also includes the investments in NID, drop and terminal/splice.

Loop Concentrator/Multiplexer -- The DLC remote terminal at which individual subscriber traffic is multiplexed and connected to loop distribution for termination at the customer's premises. The Hatfield Model includes DLC equipment and SAI investment in this UNE.

Loop Feeder -- The facilities on which subscriber traffic is carried from the line side of the end office switch to the DLC remote terminal or SAI. The UNE includes copper feeder and fiber feeder cable, plus associated structure investments (poles, conduit, etc.)

End Office Switching -- The facility connecting lines to lines, or lines to trunks. The end office represents the first point of switching. As modeled in the Hatfield Model, this UNE includes the end office switching machine investments and associated wire center costs, including distributing frames, power, land and building investments.

Operator Systems -- The systems that process and record special toll calls, public telephone toll calls, and other types of calls requiring operator assistance, as well as Directory Assistance. The investments identified in the Hatfield Model for the Operator Systems UNE include the operator position equipment, operator tandem (including required subscriber databases), wire center and operator trunks.

Dedicated Transport -- The full-period, bandwidth-specific interoffice transmission path between LEC wire centers or between LEC wire centers and an IXC POP. It provides the ability to offer individual and/or multiplexed switched and special services circuits between switches. Interoffice transport investments that provide dedicated transport are assigned to this UNE.

Common Transport -- A trunk between two switching systems on which traffic is commingled to include LEC traffic as well as traffic to and from other local or interexchange carriers. These trunks may originate at an end office and terminate at a tandem switch or at another end office. Interoffice transport investments that provide common transport are assigned to this UNE.

Tandem Switching -- The facility that provides the function of connecting trunks to trunks for the purpose of completing interoffice calls. Similar types of investments as are included in the End Office Switching UNE are also reflected in the Tandem Switching UNE.

Signaling Links -- Transmission facilities in a signaling network that carry all out-of-band signaling traffic between end office and tandem switches and STPs, between STPs, and between STPs and SCPs. Signaling link investment developed by the Hatfield Model and assigned to this UNE.

Signal Transfer Point -- This facility provides the function of routing TCAP and ISUP messages between network nodes (end offices, tandems and SCPs). The model estimates STP investment and assigns it to this UNE.

Service Control Point -- The node in the signaling network to which requests for call handling information (*e.g.*, translations for local number portability) are directed and processed. The SCP contains service logic and customer specific information required to process individual requests. The model estimates SCP investment and assigns it to this UNE.

(2) Universal Service Fund Outputs

The calculation of costs for basic local service is based on the costs of the UNEs constituting this service. These are the loop, local portions of end office and tandem switching, transport facilities for local traffic, and the local portions of signaling investment. No operator services or SCP investments are included. In addition, these UNE cost elements are adjusted to accommodate other items such as retail uncollectibles rather than wholesale uncollectibles. Finally, certain retail expenses required by basic local service, such as billing and bill inquiry, directory listings, number portability costs, etc. are added.

For illustrative purposes, the USF sheet in the expense module compares the monthly cost per line in each density range to a user-adjustable "affordable" monthly price for local service (which include the End User Common Line charge). If the cost exceeds the "affordable" price, the model accumulates the total required annual subsidy at the stated price level according to the number of households in each density range.

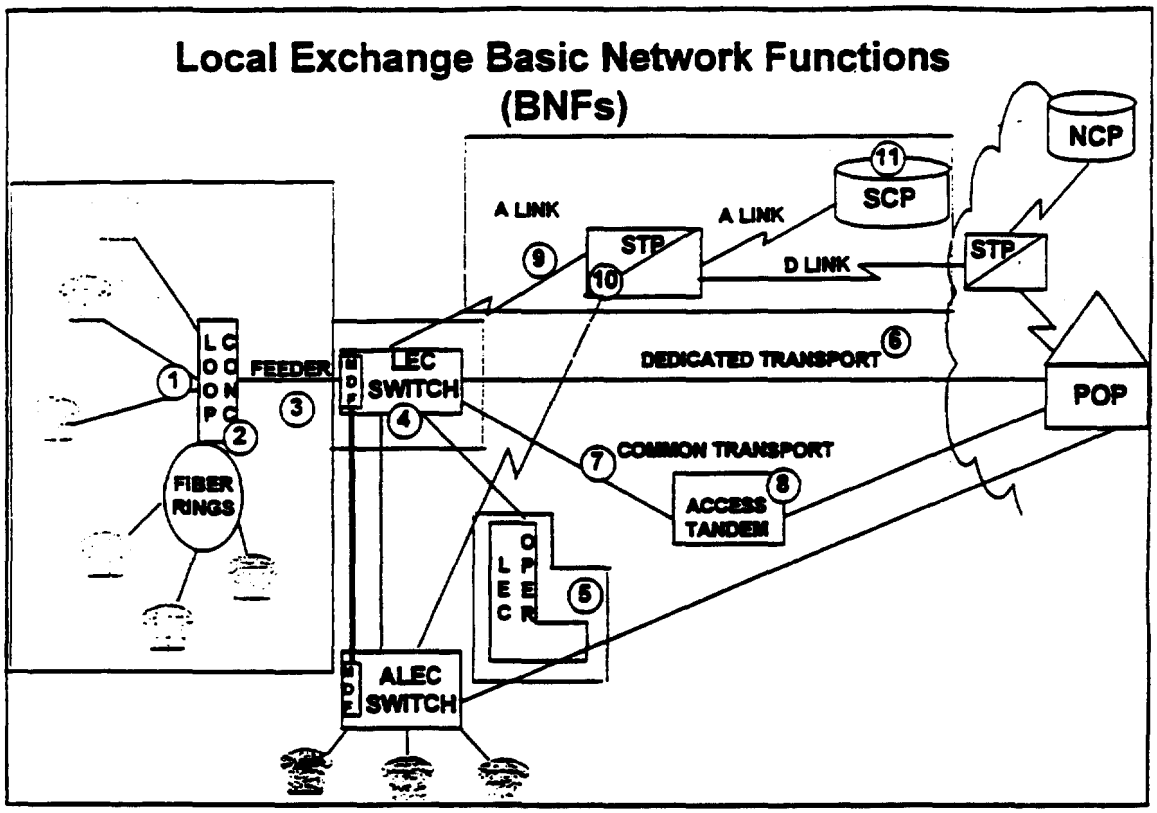

Figure 11 Local Exchange Network Elements

III. SUMMARY

In its Version 2.2, Release 2 formulation, the Hatfield Model estimates reliably and consistently both the forward-looking economic cost of unbundled local exchange network elements and the forward-looking economic cost of basic local telephone service. Because both of these calculations are performed in adherence to TELRIC/TSLRIC principles, Hatfield Model cost estimates provide an accurate basis for the efficient pricing of unbundled network elements and the calculation of efficient universal service funding requirements.

HM2.2.2's methodology is transparent, and it uses public source data for its inputs. These default input values represent the developers' best judgments of efficient, forward-looking engineering and economic practices. But, because many of these inputs are adjustable, users of HM2.2.2 can use the model's automated interface to model directly and simply any desired alternative scenario.

Appendix A

Summary of Changes Between Releases 1 and 2 of the Hatfield Model, Version 2.2

This document describes changes made to the Hatfield Model Version 2.2 between Release 1 and Release 2. The discussions refer specifically to changes incorporated in Release 2 that modify the updated Release 1 version as filed publicly with the FCC on May 30, 1996.

A Benchmark Cost Model (BCM) derivative work called BCM-PLUS has been developed for and copyrighted by MCI Telecommunications Corporation and incorporated into the Release 2 version of the Hatfield Model (which, in this description, is known as HM2.2.2, for Hatfield Model Version 2.2 Release 2). HM2.2.2 also includes an automated user interface with dialog boxes that allow the user to change options and adjust inputs. The interface automates the running of the model as well.

BCM-PLUS Modules

Data module

1. Input and output sheets include an additional column containing business line counts per census block group (CBG).

2. Feeder and distribution distances are increased by 20% in the presence of rocky terrain to accommodate routing of facilities around difficult placement conditions.

3. Feeder length calculation modified to place SAI inside CBG by one-fourth the length of a CBG side.

Loop module

1. The distance at which fiber feeder is assumed is now user-adjustable. In the original BCM, the model assumed fiber feeder cables for total loop lengths of 12,000 ft or greater. In the new version, the calculation is based on total feeder length, and the threshold distance may be adjusted by the user to any value. The default setting is 9,000 ft.

2. The DS-0 capacity per fiber is now adjustable with a default value of 2016 (equivalent to 3 DS-3s). In the original version, the model included a fixed capacity of 672 DS-0s (1 DS-3) per fiber.

3. The number of fibers required per digital loop carrier remote terminal is now adjustable. The default setting is four fibers, which is the same as the value fixed in the original BCM.

4. Lookup tables for optical feeder cable investment now allow user adjustment of cable sizes. The default maximum cable size is now 216 fibers. In the first BCM version, the maximum cross sections for optical and copper fiber and distribution cables were fixed. Also, fiber and copper cable investments per unit length have been adjusted to include engineering, delivery, and installation in addition to material investment. The original BCM did not include installation, engineering, and delivery in this table. The default distribution cable investment table now includes 25-pair cable.

5. The module now computes varying numbers of distribution cables according to density range to accommodate different population distributions in high and low density ranges.

6. Density ranges are now expressed in terms of lines per square mile instead of households per square mile.

Hatfield Model modules

Line Multiplier (now Line Converter) Module:

1. The original Line Multiplier Module used user-specified line multipliers that varied by density range to estimate total residential, business, special access, and public lines. The new Line Converter module applies uniform multipliers to all CBGs to compute residential access lines in each density zone. The business, special access, and public line calculations are based on data that estimate the number of business employees in each CBG. All line totals are computed to match those shown in the ILEC's most recent ARMIS 43-08 reports.

2. The input data contains estimated 1995 household counts per CBG in place of the 1990 counts in the original BCM data.

3. The module computes CBG density in terms of lines, instead of households, per square mile.

Wire Center Investment Module

1. The module removes previous double-counting of trunk ports by reducing the input per-line switching investment by $16 per line, because the model separately calculates the investment in trunk ports for the switches in each wire center and adds the total trunk port investment to the total switching investment in each wire center.

2. STP size is now scaled by the number of A links in the study area; the model previously equipped maximum-capacity STPs in all cases.

3. The module now computes Signaling System 7 C and D link investments, where it previously calculated only A link investments.

4. The transmission facilities investment, expressed as investment per DS-0-mile, is now calculated explicitly for each of the following routes:

common (tandem)
local direct
intra LATA direct
IXC switched access direct
special access

The calculations allow separate user assumptions for optical patch panels, optical multiplexers, regenerator investment and spacing, installation costs, mix of buried/underground/aerial plant, and manhole and pole spacing and installation.

5. The module eliminates double counting of structure costs typically shared between interoffice and feeder facilities.

6. The model now contains reconciled usage calculations between the Expense Module and Wire Center Investment Module.

7. Operator services positions may now be remote from the operator tandem. The user may select the distance; the default value is zero.

8. The module now includes tandem-to-POP switched access direct transport facilities.

9. The end office capacity limits now include entries for switch traffic; they previously included line and processor real-time limits. There are also separate holding time multipliers for business and residence lines to allow users to compute the effects of increased holding time on costs.

10. The module now uses pre-processed interoffice distance data derived from end office, tandem, and STP locations listed in the Local Exchange Routing Guide. This facilitates the running of the model.

Convergence Module

1. The module now separately computes structure costs for aerial, buried, and underground facilities, including poles, conduit, trenching, and manholes. The model independently treats underground and buried cable. The new version eliminates previous double counting of terminals and splices. All structure factors, including the mix of aerial, buried, and underground distribution and feeder facilities are user definable.

2. Digital loop carrier investment is now computed from "ground up." The calculation includes site, housing, power, engineering, common equipment (including multiplexing at the wire center), and line cards.

3. The new version corrects a previous calculation error in local direct and local tandem trunk investment.

4. Default settings eliminate optical multiplexers from the Serving Area Interface. Sufficient fiber capacity exists to allow dedicated fibers to serve each remote terminal, as is consistent with current practices.

Expense Module

1. The module allows economic lives of up to 50 years to be input, (previous maximum permitted life was 32 years).

2. Consistent with the new structure calculations and incorporation of separate underground and buried facilities inputs, the model now calculates separate expense factors for the following network components:

Aerial cable
Underground cable
Buried cable
Poles
Manholes
Conduit

Previously, only aerial and underground factors were calculated.

3. Double counting of DLC terminations and end office line circuits is eliminated.

4. Trunk port costs can now be estimated per DS-0 or per minute.

5. Default user inputs for cost of debt, equity, and debt/equity ratio have been changed.

6. Separate uncollectibles rates for retail and carrier-to-carrier are specified.

7. The module eliminates a previous triple counting of NID (other terminal equipment) investment.

8. Drops are now computed per household rather than per line basis.

9. Dedicated trunking calculations have been reconciled between the Expense Module and the Wire Center Investment Module.

10. IXC switched access and local interconnection unit costs have been added to a new "Cost Detail" worksheet in the Expense Module.

11. NID expenses are now based on ARMIS-reported regulated expense per line (other terminal account); they previously included all "other terminal" expenses and, as a result, overstated NID maintenance expenses.

12. A user-definable carrier-to-carrier customer service expense has been added. Its default value is set at $1.56/line/year -- based on ARMIS 43-04 data on current ILEC expense in serving IXC's access accounts.

13. The new version includes a NID monthly cost calculation in the "Cost Detail" worksheet.

14. Structure sharing fractions have been expanded to allow the user to set independent parameters for aerial, buried, and underground distribution and feeder structure. Default values are 0.33 for all categories.

15. The module now contains a Universal Service Module with the following features:

Network cost built up from UNEs

Network Operations factored to reflect local service only

Local number portability costs have been added as a user input; with a default setting of $0.25 per line per month.