annual and monthly network costs, as well as basic local service costs per household.

(1) Unbundled Network Elements outputs

The Hatfield Model produces cost estimates for eleven UNEs, plus public telephone terminal equipment. These UNEs represent an unbundling of the local exchange network into discrete functions, which can be used singly or in any combination to furnish services. The UNEs are described below and their inter-relationships are illustrated in Figure 11.

Loop Distribution -- The individual communications channel originating from the DLC remote terminal or SAI and terminating at the customer's premises. In the Hatfield Model, this UNE also includes the investments in NID, drop and terminal/splice.

Loop Concentrator/Multiplexer -- The DLC remote terminal at which individual subscriber traffic is multiplexed and connected to loop distribution for termination at the customer's premises. The Hatfield Model includes DLC equipment and SAI investment in this UNE.

Loop Feeder -- The facilities on which subscriber traffic is carried from the line side of the end office switch to the DLC remote terminal or SAI. The UNE includes copper feeder and fiber feeder cable, plus associated structure investments (poles, conduit, etc.)

End Office Switching -- The facility connecting lines to lines, or lines to trunks. The end office represents the first point of switching. As modeled in the Hatfield Model, this UNE includes the end office switching machine investments and associated wire center costs, including distributing frames, power, land and building investments.

Operator Systems -- The systems that process and record special toll calls, public telephone toll calls, and other types of calls requiring operator assistance, as well as Directory Assistance. The investments identified in the Hatfield Model for the Operator Systems UNE include the operator position equipment, operator tandem (including required subscriber databases), wire center and operator trunks.

Dedicated Transport -- The full-period, bandwidth-specific interoffice transmission path between LEC wire centers or between LEC wire centers and an IXC POP. It provides the ability to offer individual and/or multiplexed switched and special services circuits between switches. Interoffice transport investments that provide dedicated transport are assigned to this UNE.

Common Transport -- A trunk between two switching systems on which traffic is commingled to include LEC traffic as well as traffic to and from other local or interexchange carriers. These trunks may originate at an end office and terminate at a tandem switch or at another end office. Interoffice transport investments that provide common transport are assigned to this UNE.

Tandem Switching -- The facility that provides the function of connecting trunks to trunks for the purpose of completing interoffice calls. Similar types of investments as are included in the End Office Switching UNE are also reflected in the Tandem Switching UNE.

Signaling Links -- Transmission facilities in a signaling network that carry all out-of-band signaling traffic between end office and tandem switches and STPs, between STPs, and between STPs and SCPs. Signaling link investment developed by the Hatfield Model and assigned to this UNE.

Signal Transfer Point -- This facility provides the function of routing TCAP and ISUP messages between network nodes (end offices, tandems and SCPs). The model estimates STP investment and assigns it to this UNE.

Service Control Point -- The node in the signaling network to which requests for call handling information (*e.g.*, translations for local number portability) are directed and processed. The SCP contains service logic and customer specific information required to process individual requests. The model estimates SCP investment and assigns it to this UNE.

(2) Universal Service Fund Outputs

The calculation of costs for basic local service is based on the costs of the UNEs constituting this service. These are the loop, local portions of end office and tandem switching, transport facilities for local traffic, and the local portions of signaling investment. No operator services or SCP investments are included. In addition, these UNE cost elements are adjusted to accommodate other items such as retail uncollectibles rather than wholesale uncollectibles. Finally, certain retail expenses required by basic local service, such as billing and bill inquiry, directory listings, number portability costs, etc. are added

For illustrative purposes, the USF sheet in the expense module compares the monthly cost per line in each density range to a user-adjustable "affordable" monthly price for local service (which include the End User Common Line charge). If the cost exceeds the "affordable" price, the model accumulates the total required annual subsidy at the stated price level according to the number of households in each density range.

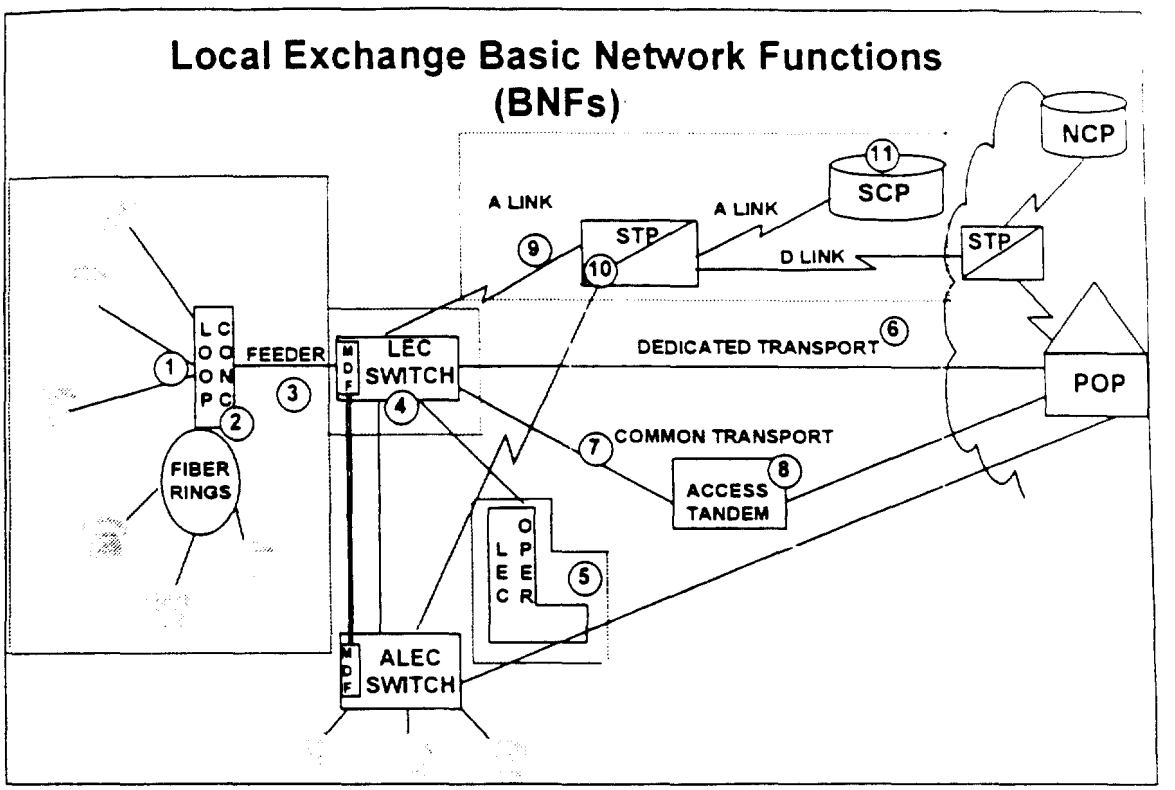

Figure 11 Local Exchange Network Elements

III. SUMMARY

In its Version 2.2, Release 2 formulation, the Hatfield Model estimates reliably and consistently both the forward-looking economic cost of unbundled local exchange network elements and the forward-looking economic cost of basic local telephone service. Because both of these calculations are performed in adherence to TELRIC/TSLRIC principles, Hatfield Model cost estimates provide an accurate basis for the efficient pricing of unbundled network elements and the calculation of efficient universal service funding requirements.

HM2.2.2's methodology is transparent, and it uses public source data for its inputs. These default input values represent the developers' best judgments of efficient, forward-looking engineering and economic practices. But, because many of these inputs are adjustable, users of HM2.2.2 can use the model's automated interface to model directly and simply any desired alternative scenario.

Appendix A

Summary of Changes Between Releases 1 and 2 of the Hatfield Model, Version 2.2

This document describes changes made to the Hatfield Model Version 2.2 between Release 1 and Release 2. The discussions refer specifically to changes incorporated in Release 2 that modify the updated Release 1 version as filed publicly with the FCC on May 30, 1996.

A Benchmark Cost Model (BCM) derivative work called BCM-PLUS has been developed for and copyrighted by MCI Telecommunications Corporation and incorporated into the Release 2 version of the Hatfield Model (which, in this description, is known as HM2.2.2, for Hatfield Model Version 2.2 Release 2). HM2.2.2 also includes an automated user interface with dialog boxes that allow the user to change options and adjust inputs. The interface automates the running of the model as well.

BCM-PLUS Modules

Data module

1. Input and output sheets include an additional column containing business line counts per census block group (CBG).

2. Feeder and distribution distances are increased by 20% in the presence of rocky terrain to accommodate routing of facilities around difficult placement conditions.

3. Feeder length calculation modified to place SAI inside CBG by one-fourth the length of a CBG side.

Loop module

1. The distance at which fiber feeder is assumed is now user-adjustable. In the original BCM, the model assumed fiber feeder cables for total loop lengths of 12,000 ft or greater. In the new version, the calculation is based on total feeder length, and the threshold distance may be adjusted by the user to any value. The default setting is 9,000 ft.

2. The DS-0 capacity per fiber is now adjustable with a default value of 2016 (equivalent to 3 DS-3s). In the original version, the model included a fixed capacity of 672 DS-0s (1 DS-3) per fiber.

3. The number of fibers required per digital loop carrier remote terminal is now adjustable. The default setting is four fibers, which is the same as the value fixed in the original BCM.

4. Lookup tables for optical feeder cable investment now allow user adjustment of cable sizes. The default maximum cable size is now 216 fibers. In the first BCM version, the maximum cross sections for optical and copper fiber and distribution cables were fixed. Also, fiber and copper cable investments per unit length have been adjusted to include engineering, delivery, and installation in addition to material investment. The original BCM did not include installation, engineering, and delivery in this table. The default distribution cable investment table now includes 25-pair cable.

5. The module now computes varying numbers of distribution cables according to density range to accommodate different population distributions in high and low density ranges.

6. Density ranges are now expressed in terms of lines per square mile instead of households per square mile.

Hatfield Model modules

Line Multiplier (now Line Converter) Module:

1. The original Line Multiplier Module used user-specified line multipliers that varied by density range to estimate total residential, business, special access, and public lines. The new Line Converter module applies uniform multipliers to all CBGs to compute residential access lines in each density zone. The business, special access, and public line calculations are based on data that estimate the number of business employees in each CBG. All line totals are computed to match those shown in the ILEC's most recent ARMIS 43-08 reports.

2. The input data contains estimated 1995 household counts per CBG in place of the 1990 counts in the original BCM data.

3. The module computes CBG density in terms of lines, instead of households, per square mile.

Wire Center Investment Module

1. The module removes previous double-counting of trunk ports by reducing the input per-line switching investment by $16 per line, because the model separately calculates the investment in trunk ports for the switches in each wire center and adds the total trunk port investment to the total switching investment in each wire center.

2. STP size is now scaled by the number of A links in the study area; the model previously equipped maximum-capacity STPs in all cases.

3. The module now computes Signaling System 7 C and D link investments, where it previously calculated only A link investments.

4. The transmission facilities investment, expressed as investment per DS-0-mile, is now calculated explicitly for each of the following routes:

common (tandem)
local direct
intra LATA direct
IXC switched access direct
special access

The calculations allow separate user assumptions for optical patch panels, optical multiplexers, regenerator investment and spacing, installation costs, mix of buried/underground/aerial plant, and manhole and pole spacing and installation.

5. The module eliminates double counting of structure costs typically shared between interoffice and feeder facilities.

6. The model now contains reconciled usage calculations between the Expense Module and Wire Center Investment Module.

7. Operator services positions may now be remote from the operator tandem. The user may select the distance; the default value is zero.

8. The module now includes tandem-to-POP switched access direct transport facilities.

9. The end office capacity limits now include entries for switch traffic; they previously included line and processor real-time limits. There are also separate holding time multipliers for business and residence lines to allow users to compute the effects of increased holding time on costs.

10. The module now uses pre-processed interoffice distance data derived from end office, tandem, and STP locations listed in the Local Exchange Routing Guide. This facilitates the running of the model.

Convergence Module

1. The module now separately computes structure costs for aerial buried, and underground facilities, including poles, conduit, trenching, and manholes. The model independently treats underground and buried cable. The new version eliminates previous double counting of terminals and splices. All structure factors, including the mix of aerial, buried, and underground distribution and feeder facilities are user definable.

2. Digital loop carrier investment is now computed from "ground up." The calculation includes site, housing, power, engineering, common equipment (including multiplexing at the wire center), and line cards.

3. The new version corrects a previous calculation error in local direct and local tandem trunk investment.

4. Default settings eliminate optical multiplexers from the Serving Area Interface. Sufficient fiber capacity exists to allow dedicated fibers to serve each remote terminal, as is consistent with current practices.

Expense Module

1. The module allows economic lives of up to 50 years to be input, (previous maximum permitted life was 32 years).

2. Consistent with the new structure calculations and incorporation of separate underground and buried facilities inputs, the model now calculates separate expense factors for the following network components:

Aerial cable
Underground cable
Buried cable
Poles
Manholes
Conduit

Previously, only aerial and underground factors were calculated.

3. Double counting of DLC terminations and end office line circuits is eliminated.

4. Trunk port costs can now be estimated per DS-0 or per minute.

5. Default user inputs for cost of debt, equity, and debt/equity ratio have been changed.

6. Separate uncollectibles rates for retail and carrier-to-carrier are specified.

7. The module eliminates a previous triple counting of NID (other terminal equipment) investment.

8. Drops are now computed per household rather than per line basis.

9. Dedicated trunking calculations have been reconciled between the Expense Module and the Wire Center Investment Module.

10. IXC switched access and local interconnection unit costs have been added to a new "Cost Detail" worksheet in the Expense Module.

11. NID expenses are now based on ARMIS-reported regulated expense per line (other terminal account); they previously included all "other terminal" expenses and, as a result, overstated NID maintenance expenses.

12. A user-definable carrier-to-carrier customer service expense has been added. Its default value is set at $1.56/line/year -- based on ARMIS 43-04 data on current ILEC expense in serving IXC's access accounts.

13. The new version includes a NID monthly cost calculation in the "Cost Detail" worksheet.

14. Structure sharing fractions have been expanded to allow the user to set independent parameters for aerial, buried, and underground distribution and feeder structure. Default values are 0.33 for all categories.

15. The module now contains a Universal Service Module with the following features:

Network cost built up from UNEs

Network Operations factored to reflect local service only

Local number portability costs have been added as a user input; with a default setting of $0.25 per line per month.

Appendix B

Instruction Manual

Hatfield Model Version 2.2, Release 2

Automated Interface

I. GETTING STARTED

A. SYSTEM REQUIREMENTS

The Hatfield Model (HM) Automated Interface requires the following minimum PC system components to run properly:

- Pentium 133 MHz processor or higher
- 128 MB RAM or more
- CD-ROM drive
- Microsoft Windows 95 or Windows NT operating system
- Microsoft Excel version 7.0

B. TERMINOLOGY

The following terminology is used in this documentation when referring to the Hatfield Model and its components:

HM Modules: The HM Modules are the six functional Excel files which comprise the HM. They are Line Converter, Data Master, Loop Master, Wire Center, Convergence, and Expense.

HM Interface: The user interface to the Hatfield model, which is contained in the Excel file HM_Interface.xls. (Figure 1 shows what the HM Interface looks like.)

Workfile: A workfile is an Excel file created by the HM which contains state-specific HM data and outputs, and can reflect user-specified input parameters. Although the workfile is created by the HM, the user must provide a filename.

Data Template: The data template is a special workfile which contains the default inputs for each state. Data templates use a filename convention which looks like: AZ_rboc__tmplt.xls. Data templates should not be modified by HM users.

C. DIRECTORY STRUCTURE

The HM Interface assumes a basic directory structure as follows:

- HM modules should be stored in C:\hatfield modules
- HM data templates should be stored in C:\hatfield templates

The HM Interface allows users to specify which directories the HM components reside in by selecting 'HM Tools/Set Up Paths and Directories', but it is recommended that the default settings be used.

CD-ROM users should ensure that the paths and filenames point to the appropriate CD-ROM drive (e.g., D:\).

II. RUNNING THE HATFIELD MODEL

D. CREATING A NEW WORKFILE

- Select 'HM Tools/New HM Workfile...'
- Select the appropriate state from the dialog box.
- Select 'HM Tools/Save HM Workfile...' to give the workfile a unique name.
- Press 'GO!'
- Save Expense Module when HM is done calculating
- Select 'HM Tools/Close HM Workfile...' when finished

E. MODIFYING AN EXISTING WORKFILE

Once a workfile has been created, it can be modified to reflect different input parameters. To modify an existing workfile:

- Select 'HM Tools/Open HM Workfile...'
- Modify inputs as necessary, using process described below
- Press 'GO!'
- Save Expense Module when HM is done calculating
- Select 'HM Tools/Close HM Workfile...' when finished

F. CHANGING USER INPUTS

The HM contains several hundred user-adjustable parameters, each of which can be easily modified using the HM Interface. To change a user input, open the appropriate workfile, and select the desired category of inputs from the 'HM Inputs' menu. A dialog box will appear, in which alternative inputs may be specified. (See Figure 2.) If the workfile is saved, the alternative inputs will be saved with it. However, default inputs can always be restored by clicking the 'Reset Defaults' button on the input dialog box.

G. TROUBLESHOOTING

- If the HM Interface displays 'Cannot find file...' errors, ensure that the paths and filenames are correctly specified in the 'HM Tools/Set Paths and Filenames...' menu.
- In the unlikely event that the HM crashes, it is always best to restart.

Figure 1: HM Interface

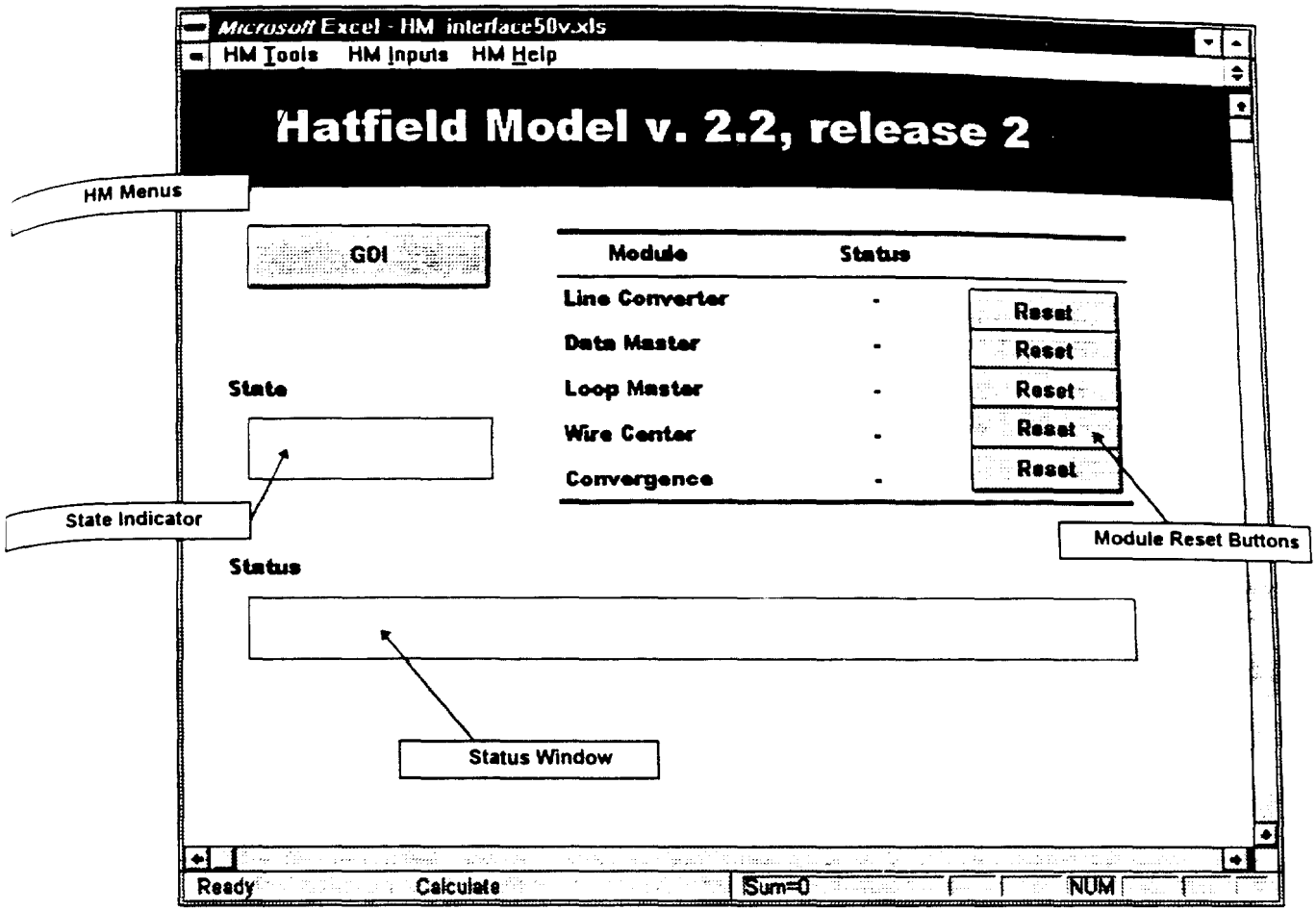

Figure 2: Sample User Input Dialog Box

Misc Loop Investment Inputs

Drop investment per line	$40.00
NID investment per line	$30.00
Terminal & Splice per line	$35.00
Avg lines per business location	4

Distribution structure % assigned to telephone

Aerial	0.33
Buried	0.33
Underground	0.33

Feeder structure % assigned to telephone

Aerial	0.33
Buried	0.33
Underground	0.33

Distribution cable size	SAI investment, installed: copper	SAI investment, installed: fiber feeder
0	$500.00	$2,500.00
100	$700.00	$2,700.00
200	$900.00	$2,900.00
400	$1,100.00	$3,100.00
600	$1,300.00	$3,300.00
900	$1,500.00	$3,500.00
1200	$1,700.00	$3,700.00
1800	$1,900.00	$3,900.00
2400	$2,100.00	$4,100.00
3000	$2,300.00	$4,300.00
3600	$2,500.00	$4,500.00

OK

!Help | Reset Defaults | Cancel

BCM-PLUS Loop Module Inputs

Cable fill factors

density	Feeder	Distribution
0	0.65	0.5
5	0.75	0.55
200	0.8	0.6
650	0.8	0.65
850	0.8	0.7
2550	0.8	0.75

DS-0s per fiber		Fibers per RT
DLC case	2016	4
AFC case	2016	4

Fiber feeder distance threshold, ft

9,000

Fiber feeder cable inv per foot

Cable Size	u/g	aerial
216	$ 13.10	$ 13.10
144	$ 9.50	$ 9.50
96	$ 7.10	$ 7.10
72	$ 5.90	$ 5.90
60	$ 5.30	$ 5.30
48	$ 4.70	$ 4.70
36	$ 4.10	$ 4.10
24	$ 3.50	$ 3.50
18	$ 3.20	$ 3.20
12	$ 2.90	$ 2.90

Distribution cable inv per ft

Cable Size	u/g	aerial
3600	$ 63.75	$ 63.75
3000	$ 53.25	$ 53.25
2400	$ 42.75	$ 42.75
1800	$ 32.25	$ 32.25
1200	$ 21.75	$ 21.75
900	$ 16.50	$ 16.50
600	$ 11.25	$ 11.25
400	$ 7.75	$ 7.75
200	$ 4.25	$ 4.25
100	$ 2.50	$ 2.50
50	$ 1.63	$ 1.63
25	$ 1.19	$ 1.19

Copper feeder cable inv per ft

Cable Size	u/g	aerial
4200	$ 74.25	$ 74.25
3600	$ 63.75	$ 63.75
3000	$ 53.25	$ 53.25
2400	$ 42.75	$ 42.75
1800	$ 32.25	$ 32.25
1200	$ 21.75	$ 21.75
900	$ 16.50	$ 16.50
600	$ 11.25	$ 11.25
400	$ 7.75	$ 7.75
200	$ 4.25	$ 4.25
100	$ 2.50	$ 2.50

Wire Center Investment Module Inputs

EO switching and traffic parameters

switch real-time limit, BHCA

lines	limit
1	10,000
1,000	50,000
10,000	200,000
40,000	600,000

switch traffic limit, BHCCS

lines	limit
1	10,000
1,000	50,000
10,000	500,000
40,000	1,000,000

switch maximum line size	100,000
switch max line fill	0.80
switch max processor occupancy	0.90
processor feature loading multiplier	1.00
switch installation multiplier	1.1

switch price/line size references

switch price per line, less trunk circuits @	$ 220.00	$ 86.00	$ 59.00
switch line size	2,782	11,200	80,000

BH fraction of daily usage	0.10
Annual to daily usage reduction factor	270
residential holding time multiplier	1.0
business holding time multiplier	1.0

(offered load assumed for afternoon busy hour)

call attempts/BH

residential	1.3
business	3.5

Interoffice parameters

operator traffic fraction	0.02
total interoffice traffic fraction	0.65
direct-routed fraction of local interoffice	0.98

Transmission parameters

maximum trunk occupancy, CCS	27.5
trunk port, per end	$ 100.00
average direct route distance, miles	10
average trunk usage fraction	0.3

Tandem switching parameters

real time limit, BHCA	1,500,000
port limit, trunks	120,000
common equipment investment	$ 1,000,000
maximum trunk fill	0.8
maximum real time occupancy	0.9
common equipment intercept factor	0.25

Signaling parameters

STP link capacity	720
STP maximum fill	0.8
STP investment, per pair, fully equipped	$ 5,000,000
STP common equipment investment, per pair	$ 1,000,000
link termination, both ends	$ 900
signaling link bit rate	56,000
link occupancy	0.4
C link cross section	24
ISUP messages per interoffice BHCA	6
ISUP message length, bytes	25
TCAP messages per transaction	2
TCAP message length, bytes	100
fraction of BHCA requiring TCAP	0.10
SCP investment/transaction/second	$ 20,000

Wire Center Investment Module Inputs

Operator position parameters

investment per position	$	3,500
maximum utilization per position, CCS		27
operator intervention factor		10
operator position remote distance, mi		0

Wire center parameters

lot size, multiplier of switch room size	2
tandem/EO wire center common factor	0.40

Power and frame investment

served lines in wire center		sum of power and frame
0	$	10,000
1,000	$	20,000
5,000	$	40,000
25,000	$	100,000
50,000	$	500,000

Switch room size table

switch size, lines	floor area required
0	500
1,000	1,000
5,000	2,000
25,000	5,000
50,000	10,000

Construction costs, per sq ft

switch size, lines		construction, $/sq ft
0	$	75
1,000	$	85
5,000	$	100
25,000	$	125
50,000	$	150

Land price, per sq ft

lines in wire center		price/sq ft
0	$	5.00
1,000	$	7.50
5,000	$	10.00
25,000	$	15.00
50,000	$	20.00

Public telephone, per station	$	1,200

Toll traffic inputs

local call attempts	
call completion factor	0.70
intraLATA calls completed	
interLATA intrastate calls completed	
interLATA interstate calls completed	
local DEMs, thousands	
intrastate DEMs, thousands	
interstate DEMs, thousands	
tandem-routed fraction of total intraLATA traffic	0.2
average direct intraLATA route distance, mi	25
tandem-routed fraction of total interLATA traffic	0.2
average direct access route distance, mi	15

Interoffice transport investment		Unit Cost
Terminal investment		
Number of fibers		24
FOT capacity, DS-3s		12
FOT fill		0.80
FOT, installed	$	43,000
Pigtails	$	60
Panel	$	1,000
EF&I, per hour	$	55
Medium investment		
Fraction of structure assigned to telephone		0.33
Fraction of structure shared with feeder		0.25
Distance, mi		41
Regenerator spacing, mi		40
Regenerator investment, installed	$	15,000
Fiber cable inv/ft	$	2.00
Placement	$	2.00
Splice spacing,ft		20,000
Splice cost	$	15.00
Trenching/ft	$	45.00
Resurfacing/ft	$	10.00
Conduit/ft	$	4.00
Number of tubes		2
Manhole spacing		1,000
Manhole inv per manhole	$	5,000
Total Conduit	$	5.00
Buried installation/ft	$	450
Pole inv.		150
Pole spacing		
Weighting	underground	0.3500
	buried	0.5000
	aerial	0.1500

Convergence Module Inputs

drop investment per line	$	40
NID investment per line	$	30
terminal and splice per line	$	35
average lines per business location		4

Distribution cable size	SAI investment (installed) copper feeder		SAI investment (installed) fiber feeder	
0	$	500.00	$	2,500.00
100	$	700.00	$	2,700.00
200	$	900.00	$	2,900.00
400	$	1,100.00	$	3,100.00
600	$	1,300.00	$	3,300.00
900	$	1,500.00	$	3,500.00
1200	$	1,700.00	$	3,700.00
1800	$	1,900.00	$	3,900.00
2400	$	2,100.00	$	4,100.00
3000	$	2,300.00	$	4,300.00
3600	$	2,500.00	$	4,500.00

Digital loop carrier inputs

BCM "SLC" (TR-303)

site, housing, and power per RT	$	3,000
maximum lines		672
RT fill factor		0.90
common equipment investment	$	42,000
channel unit investment per line	$	75

BCM "AFC"

site, housing, and power per RT	$	2,500
maximum lines		100
RT fill factor		0.90
common equipment investment	$	10,000
channel unit investment per line	$	150

Convergence Module Inputs

Distribution structure inputs

density range limit	aerial fraction	buried fraction	underground fraction	buried installation/foot	conduit installation/foot
0	0.50	0.50	-	$ 2.00	$ 25.00
5	0.50	0.50	-	$ 2.00	$ 25.00
200	0.50	0.50	-	$ 2.00	$ 25.00
650	0.50	0.50	-	$ 3.00	$ 25.00
850	0.40	0.50	0.10	$ 3.00	$ 45.00
2550	0.65	0.05	0.30	$ 20.00	$ 70.00

pole spacing, feet	150	
pole investment	$ 450	
conduit investment per foot	$ 1.00	w/o trenching
manhole investment, per manhole	$ 3,000	
buried cable armoring multiplier	1.10	

Feeder structure inputs

Copper

density range limit	aerial fraction	buried fraction	underground fraction	manhole spacing, ft	buried installation/foot	conduit installation/foot
0	0.50	0.45	0.05	800	$ 2.00	$ 25.00
5	0.50	0.45	0.05	800	$ 2.00	$ 25.00
200	0.50	0.45	0.05	800	$ 2.00	$ 25.00
650	0.40	0.40	0.20	800	$ 3.00	$ 25.00
850	0.10	0.10	0.80	600	$ 3.00	$ 45.00
2550	0.05	0.05	0.90	400	$ 25.00	$ 75.00

pole spacing, feet	150	
pole investment	$ 450	
conduit investment per foot	$ 1.00	w/o trenching
manhole investment, per manhole	$ 3,000	
buried cable armoring multiplier, Cu	1.10	

Fiber

density range limit	aerial fraction	buried fraction	underground fraction	manhole spacing, ft	buried installation/foot	conduit installation/foot
0	0.35	0.60	0.05	2000	$ 2.00	$ 25.00
5	0.35	0.60	0.05	2000	$ 2.00	$ 25.00
200	0.35	0.60	0.05	2000	$ 2.00	$ 25.00
650	0.20	0.60	0.20	2000	$ 3.00	$ 25.00
850	0.10	0.10	0.80	2000	$ 3.00	$ 45.00
2550	0.05	0.05	0.90	2000	$ 20.00	$ 70.00

Buried cable armoring per foot, fiber	$ 0.20

Expense Module Inputs

Debt fraction		0.45
Cost of Debt		0.077
Cost of Equity		0.119
corporate overhead factor		0.100
other taxes factor		0.050
operating state and local income tax factor		0.010
billing/bill inquiry per line per month	$	1.22
directory listing per line per month	$	0.15
service order processing fraction of 6623		0.346
forward-looking network operations factor		0.700
alternative CO switching factor		0.0269
alternative circuit equipment factor		0.0153
EO traffic-sensitive fraction		0.70
per-line monthly LNP cost	$	0.25
Carrier-carrier customer service, per line per year	$	1.56
NID expense per line per year	$	3.00
DS-0/DS-1 crossover		24
DS-1/DS-3 crossover		28
Switch line circuit offset per DLC line	$	35.00

economic life and tax inputs

tax rate	0.40
economic life – 50 years maximum	
loop distribution	20
loop feeder	20
loop concentrator	10
end office switching	14.3
wire center	37
tandem switching	14.3
OS investment	8
transport facilities	19
STP	14
SCP	14
links	19
public telephones	9
general support	7

Structure fraction assigned to telephone

distribution	
aerial	0.33
underground	0.33
buried	0.33
feeder	
aerial	0.33
underground	0.33
buried	0.33

Cardinal.

Universal Service Reform

Universal service will be funded through a competitively neutral funding mechanism which the FCC will establish based on the Joint Board's recommendations in CC Docket 96-45. The universal service support is required to include support for high cost areas, low-income subscribers, as well as eligible schools, libraries and rural health care providers. Each component is to be implemented in a competitively neutral manner with respect to funding and distribution, i.e., the carrier that serves the eligible subscriber receives the subsidy that is ascribed to that subscriber.

High Cost Support

With the exception of small rural carriers, high cost support is to be reflected as the difference between the forward-looking economic costs of providing the supported core services as recommended by the Joint Board and a nationwide average benchmark rate. This support should be identified separately by serving area utilizing a proxy model. AT&T has supported the Hatfield model as the best proxy of forward-looking economic costs. The Hatfield model can be used for the determination of prices for the unbundled network elements as well as universal service subsidies.

For small rural carriers, the Joint Board has recommended that high cost support be based on the incumbent's embedded costs, but that the support be frozen on a per-line basis and be made portable.

Low-Income Support

The Joint Board recommended that the Lifeline Assistance program be extended to ensure that a baseline level of federal support be available to all low-income consumers in all states. The Joint Board recommended a federal baseline of $5.25, with a maximum $7.00 federal support in conjunction with $3.50 matching state funds. As with high cost support, the low-income support should be available to all eligible telecommunications carriers.

Schools, Libraries and Health Care Providers

The Joint Board recommended that discounts for access to advanced telecomunications services be made available to eligible institutions and funded by payments from a universal service fund. The Joint Board recommended a funding cap of $2.25 billion per year for schools and libraries and did not make any recommendation with respect to rural health care providers.

Relationship of Universal Service Reform To Access Reform

AT&T believes that, commensurate with a competitively neutral funding mechanism for high cost support, there must be a corresponding offset to the revenues from services that

are currently implicitly cross-subsidizing this support mechanism. Utilizing the Hatfield model, AT&T estimates that approximately $3.3 billion of funding is required to support high cost serving areas based on forward-looking economic costs. (This amount is based on an illustrative nationwide benchmark of $20. The Joint Board has recommended that the Commission establish a nationwide benchmark based on average revenue per line.) This $3.3 billion will be recovered from the universal service fund. If contributions to that fund are assessed against interstate revenues only (a decision which is yet to be made), then the entire $3.3 billion must be reflected as an offset against interstate access. In addition, the rural carrier LTS and DEM support of $700 million that will be distributed on a frozen per-line basis to eligible carriers from the universal service fund must also be reflected as an offset against the ILECs' interstate access revenues.

C

Cardinal®

APPENDIX C

Inappropriate Retail Expense in Interstate Switched Carrier Access

Overview

This expense analysis identifies and quantifies inappropriate retail expenses which are embedded in current interstate switched access rates. It has been designed to apply the requirements of Section 252(d)(3) of the Telecommunications Act of 1996, in conjunction with the specific criteria for cost studies outlined in the First Report and Order in CC Docket 96-98, to interstate access.[1]

The Act states that wholesale rates will be determined "on the basis of retail rates charged to subscribers for the telecommunications service requested, excluding the portion thereof attributable to any marketing, billing, collection, and other costs that will be avoided by the local exchange carrier."[2] Interstate access is a wholesale service and the retail expenses identified in this study are not associated with the provision of interstate access. Current interstate access is therefore implicitly cross-subsidizing other services in violation of the Act.[3]

The analysis derives the inappropriate retail expense in interstate switched access utilizing data from 1995 Automated Report Management Information System (ARMIS) reports, specifically the ARMIS 43-03 and the 43-04 financial reports, submitted to the Commission by each ILEC. It identifies the functions that are not applicable to the provision of interstate switched access, determines the amount of inappropriate retail costs currently included in access and then removes those amounts, in the manner specified in the 96-98 Order.

Direct Expenses

The costs recorded in the following Uniform System of Accounts (USOA) are inappropriate:[4]

6611 - 6613 ***Marketing Expense***
- 6611 - Product Management
- 6612 - Sales
- 6613 - Product Advertising

---

[1] CC Docket 96-98, First Report and Order, FCC 96-325, released August 8, 1996, paras. 917-918.
[2] 47 U.S.C. Section 252(d)(3).
[3] 47 U.S.C. Section 254(k).
[4] CC Docket 96-98, First Report and Order, FCC 96-325, released August 8, 1996, para. 917.

6621 - 6623 ***Customer Service Expense***

6621 - Call Completion Services
6622 - Number Services
6623 - Customer Services

As an exception to the categories outlined by the Commission, the following subcategories of customer service were identified as applicable to the provision of access, and therefore ***not deducted as inappropriate:***

7150 - Total IXC Service Order Processing
7170 - Total IXC Payment and Collection
7190 - Total IXC Billing Inquiry
7270 - Carrier Access

Indirect Expenses

The costs recorded in the following accounts are also inappropriate and are removed in proportion to the inappropriate direct expenses identified above:[5]

6121 - 6124 ***General Support Expenses***

6121 - Land & Building Expenses
6122 - Furniture & Artwork Expenses
6123 - Office Equipment Expenses
6124 - General Purpose Computer Expense

6711 - 6712 ***Corporate Operations Expenses***
6721 - 6728

6711 - Executive
6712 - Planning
6721 - Accounting & Finance
6722 - External Relations
6723 - Human Resources
6724 - Information Management
6725 - Legal
6726 - Procurement
6727 - Research & Development
6728 - Other General & Administration

5301 - ***Uncollectible Revenue*** - Telecommunications

[5] Id. at para. 918.