specific parts of the process typically necessitates substantial changes in other portions of that process and/or other downstream systems.

45. It is not technically feasible today for Ameritech Michigan to segregate the loop facilities provided to ACI or unaffiliated carriers, without changing the existing operations support systems for these facilities. Of course, any such system changes would be obvious. Like switches, many of these operations support systems are purchased from third parties, who would have to be requested to modify their existing software in order to discriminate. Thus, software modifications of the type required to practice any type of discrimination would be time consuming, costly and require the cooperation of multiple vendors. Moreover, given the testing capabilities of competitors' switches, any below standard performance would quickly be detected and generate a repair request.

46. Thus, the only possible way to discriminate regarding local distribution facilities would be to segregate in some way the loop facilities used by ACI or its competitors, and selectively enhance or degrade them. This would not only be impractical and very expensive, but it would be obvious and easy to detect. Moreover, competitors wilf frequently "assume as is" in the resale mode or reuse via coordinated conversion local loop facilities currently used by

Ameritech Michigan to provide its own services to the end user, making Ameritech Michigan's ability to discriminate even more remote.

SIGNALING NETWORKS

47. The fourth network component is signaling networks, which are used to convey information between the switches necessary to route and bill a call. Until a few years ago, signaling was embedded in the voice network. Ameritech Michigan has now deployed in each of its exchanges a Signaling System 7 ("SS7") network. Basically, the SS7 network is a separate data network that allows computer processors inside each electronic local and tandem switch to send complex call control messages to other switches and to other network facilities involved in the handling of a call. In addition, administrative messages are also exchanged over SS7 to resolve abnormal situations, such as network congestion or facility failure.

48. The SS7 network is the enabling technology for new services like Caller ID, Caller ID with Name, Automatic Call Back, Call Trace, and Advanced Intelligent Network ("AIN")-based services. Attachment 5 to my affidavit illustrates the components of an SS7 network. It should be noted that the SS7 network is a fully redundant, fault tolerant design which allows the network to keep functioning in times of facility or equipment failure or in times of network congestion. This is depicted in Attachment 6 to my affidavit. Each of

the components illustrated in Attachment 5 is duplicated in SS7 networks actually deployed by Ameritech Michigan.

49. A basic SS7 network consists of a pair of signal transfer points ("STPs"), which are specialized high speed packet switches that route signaling messages between switches or between switches and other SS7 network components. Switches equipped for SS7 signaling are connected to each STP over a pair of "A links," dedicated high speed 56 Kbps data channels. Currently, all of Ameritech Michigan's local tandems, operator services tandems, access tandem switches and end offices are SS7 equipped. Attachment 6 demonstrates that, like the other three network components discussed above, the signaling network uses the same facilities and software to handle signaling for calls of all carriers and customers without differentiation.

50. Ameritech Michigan provides access to its signaling network to unaffiliated carriers, and will provide such access to ACI, under the same terms and conditions. The SS7 signaling network is a separate, highly automated network that utilizes shared facilities, generic software and fast packet switches to perform call-set-up signaling and to route administrative messages on the same basis for all traffic, regardless of the source, destination or carrier involved. Moreover, the same switches, STPs, cables, signaling protocols and

routing tables that Ameritech Michigan uses for itself will be used to provide signaling for ACI and unaffiliated carriers.

51. Since ACI and its competitors will use the same signaling network on the same basis as Ameritech Michigan itself uses, it is not practical for Ameritech Michigan to identify separately, or handle differently, comparable traffic of itself, ACI or unaffiliated carriers. Further, any attempt to discriminate on a large scale would require a major reconfiguration of Ameritech Michigan's SS7 network, which would be easily detected.

PRESUBSCRIPTION

52. Ameritech has implemented a specialized automated ordering interface for handling PIC changes. Ameritech Michigan will use this interface for PIC changes for both ACI and unaffiliated long distance carriers. The interface, known as the Customer Account Record Exchange (CARE) process, provides for the electronic exchange of order information. CARE processes the order automatically without human intervention and electronically updates the switch, billing and repair records. Once the change has successfully been implemented in the Ameritech Michigan switch, confirmation of the change is sent electronically back to the interexchange carrier. Notification to the former PIC of the fact that the line is no longer presubscribed to that carrier is

also automatically sent at that time. This system is exclusively designed to handle PIC changes.

53. The PIC change process is highly automated and designed to treat all requests for a PIC change on a nondiscriminatory basis. Not only is discrimination in the CARE process impractical but, to be successfully implemented, would require significant modification of the existing system. Such tampering would be easy to detect since it would be reflected in longer intervals for unaffiliated carriers or shorter ones for ACI.

MAINTENANCE AND REPAIR

54. The same maintenance and repair procedures, systems and personnel that Ameritech Michigan uses to maintain its own services and facilities are also used to maintain and repair comparable services provided to ACI or to unaffiliated carriers. These systems are designed to ensure nondiscriminatory maintenance and repair and would need to be significantly modified to support any concerted discrimination for or against ACI or unaffiliated carriers.

55. To the extent possible, maintenance is performed in a non-intrusive manner. That is, maintenance is performed at the common systems level without affecting the underlying services supported by those systems. As a general rule, the technicians maintaining those systems are not aware of the underlying

customer's identity or whether that customer is an end user or a reseller. In rare cases where a maintenance release is required for a working circuit, that release will be obtained from the customer of record. In cases involving resale, since the customer of record on resold services is the reseller, the release of the circuit for maintenance purposes will be coordinated with the reseller directly.

56. Maintenance schedules for Ameritech Michigan facilities do not depend upon the service provided over those facilities or the identity of the user. Rather, they are developed under nondiscriminatory criteria based an analysis of the underlying technologies, type of equipment, age of equipment and past performance. Since maintenance is generally performed on a system basis and not on an individual circuit basis, it would be difficult, if not impossible, to associate a different maintenance schedule with a specific resold exchange service or unbundled network element.

57. The systems supporting repair processes are also highly automated and designed to respond to repair reports on an nondiscriminatory basis. The two major systems involved in repair processes are: Work and Force Administration/Dispatch Out ("WFA/DO") and Loop Maintenance Operations System ("LMOS"). WFA/DO automates the work assignments of technicians who work outside the Central Offices installing and repairing

telecommunications service. It automates such tasks as loading and prioritizing work requests, estimating the time required to do jobs and scheduling the work. WFA/DO provides on-line status tracking of work requests and helps track the productivity of a work center for management use. It is utilized for exchange access services and unbundled network elements.

58. LMOS is part of a family of integrated computer support systems that facilitate the repair of telephone lines associated with end user and resold services. The systems included are the HCFE (High Capacity Front End), which contains the LMOS work manager database and application; MLT-3 (Mechanized Loop Testing) communications and testing; DATAKIT data network; ANS and BASE applications; and LMOS Host databases. Applications include CAS (Craft Access System), CRAS (Cable Repair and Administration) and PREDICTOR.

59. These repair systems are complex, highly automated and costly to modify. Any attempt to modify the fundamental nature of these systems would require massive re-write of system software, which would result in immediate detection by the vendors. I should also note that the trend in the industry is to automate all systems even more by "bonding electronically." This capability allows a requesting carrier (or in some cases an end user customer) the ability to enter their own trouble reports and track the progress through the system.

This capability is currently being used by access customers today, and is available to any requesting carrier under the Commission's Rules. Interexchange carriers utilizing the Electronic Bonding/Trouble Administration interface today (which is more fully described in Mr. Mickens' affidavit) are automatically provided receipt confirmation, status and trouble clearance information and can thus monitor progress in trouble resolution in real time. This would make any attempt to discriminate almost instantly apparent. Moreover, any meaningful difference in repair performance would readily become visible by examining the performance reports also described by Mr. Mickens. The certainty of detection would certainly deter any inclination an ILEC might have to engage in such discrimination.

60. In summary, repair activities are highly automated and usually involve systems and facilities used to provide service to many customers and carriers. These systems were designed to provide nondiscriminatory maintenance and repair, and cannot be modified to discriminate without easy detection. Thus, any discrimination would require a complete revamping of the existing systems, and in many cases the segregation of systems and facilities used to serve ACI as compared to other carriers. Any such attempted discrimination would be obvious and immediately detectable by third parties.

Conclusion

61. For all of these reasons, a concerted plan to discriminate in favor of Ameritech Michigan or ACI or against unaffiliated carriers is not practical. The facilities, systems, software and procedures used by the technicians involved are designed to support nondiscriminatory service and products without regard or even knowledge of the identity of the customers or carriers involved. Further, any plan to systematically engage in such discrimination would be easy to detect because it would require massive modification of existing facilities, systems and software and involve hundreds of Ameritech Michigan's technicians, as well as non-employees supporting the systems involved, making it impossible to keep the operation covert.

62. Further, should Ameritech Michigan attempt to engage in any such plan, it would be self-defeating and would cause great harm to Ameritech Michigan's reputation, because Ameritech Michigan would shoulder the blame for providing inferior services. To be effective, any discrimination scheme would need to make a perceptible difference in quality to end users, which would easily be detected by the sophisticated carriers and resellers involved. In a competitive environment, such inferior service would provide a powerful incentive for carriers and Ameritech Michigan's own end user customers to seek another underlying carrier to provide the service. Like service to end user customers, if Ameritech Michigan wishes to retain a carrier's or reseller's

business, and not have them install their own facilities or go to another facilities-based carrier, it must meet or exceed the buyer's price/performance expectations. Moreover, the legal and regulatory consequences of such behavior and the certainty of detection provide a powerful deterrent.

63. For these reasons, a concerted plan of discrimination by Ameritech Michigan in favor of itself or ACI or against unaffiliated carriers regarding the provision of exchange access, PIC changes, interconnection, collocation, unbundled network elements or resale is not technically practical. As a result, it is highly unlikely that Ameritech Michigan would attempt such discrimination.

64. This concludes my affidavit.

I hereby swear, under penalty of perjury, that the foregoing is true and correct, to the best of my knowledge and belief.

Daniel J. Kocher

Subscribed and sworn before me this 27th of December, 1996.

Notary Public

My Commission expires: 8/21/98

OFFICIAL SEAL
MIDGE HO BARKER
NOTARY PUBLIC, STATE OF ILLINOIS
MY COMMISSION EXPIRES: 08/21/98

ATTACHMENT 1

AMERITECH'S NETWORK COMPONENTS

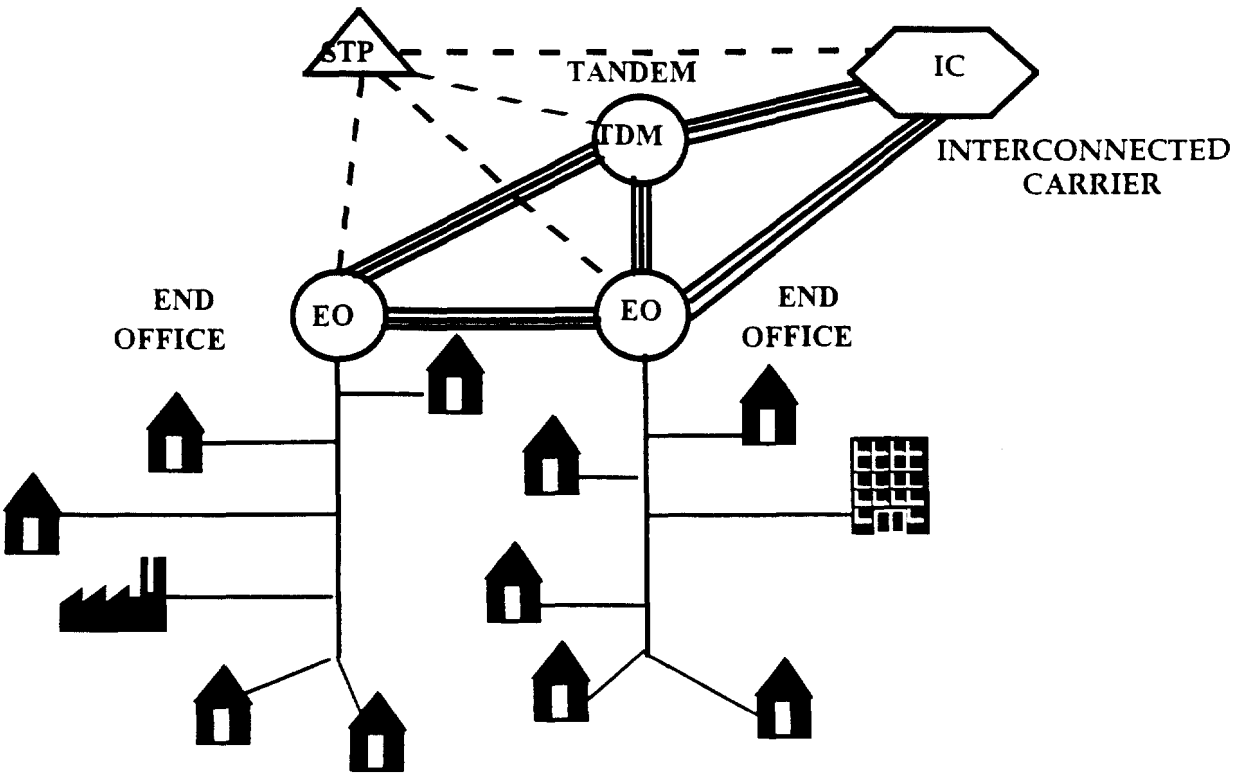

LEGEND

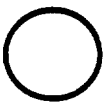

SWITCHING

INTEROFFICE TRANSPORT

SIGNALING

LOCAL DISTRIBUTION

ATTACHMENT 2

CLASSICAL NETWORK ARCHITECTURES

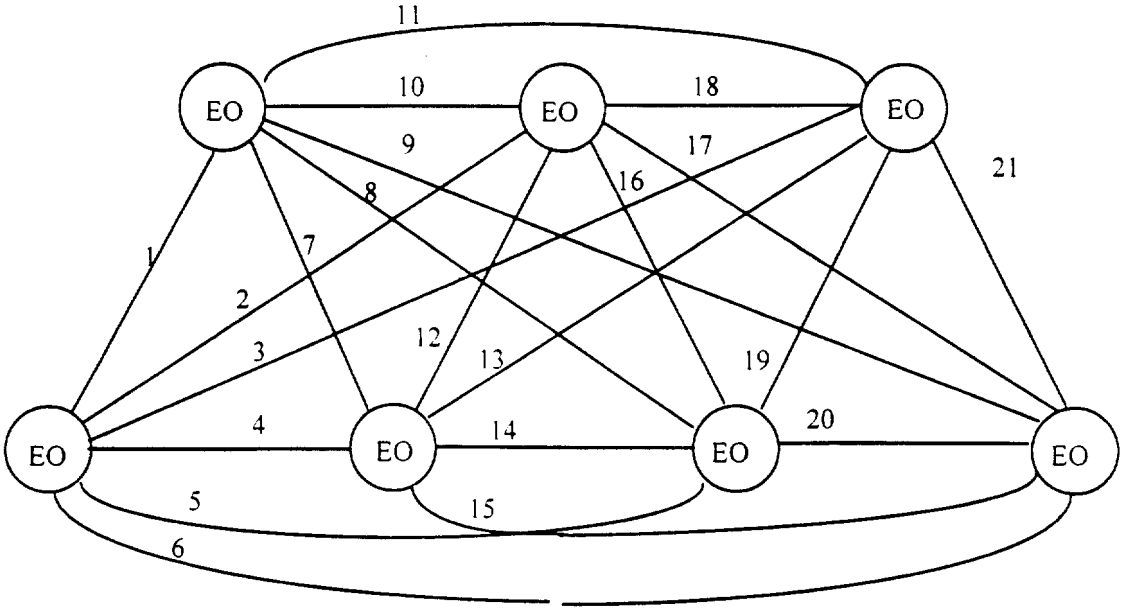

FIGURE 1

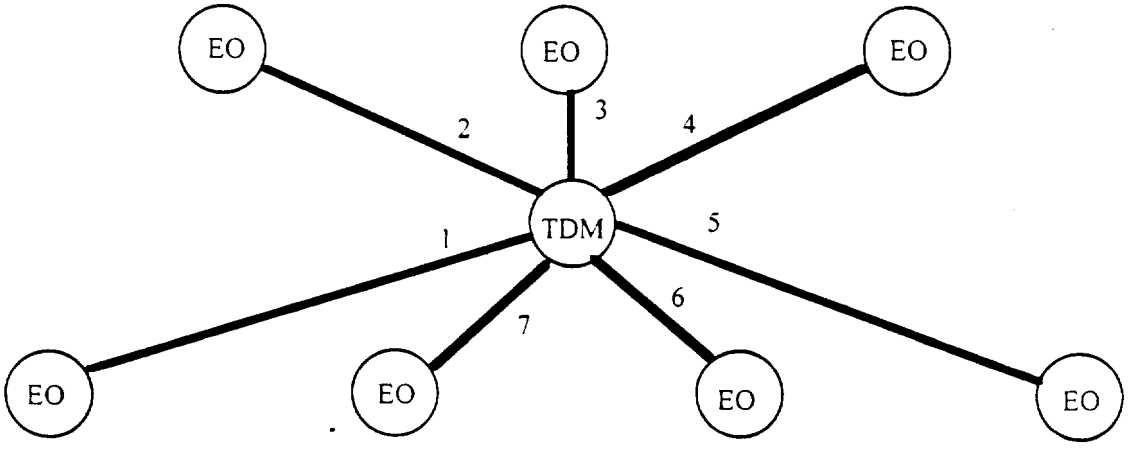

FIGURE 2

3

ATTACHMENT 3

MORE TYPICAL NETWORK ARCHITECTURE

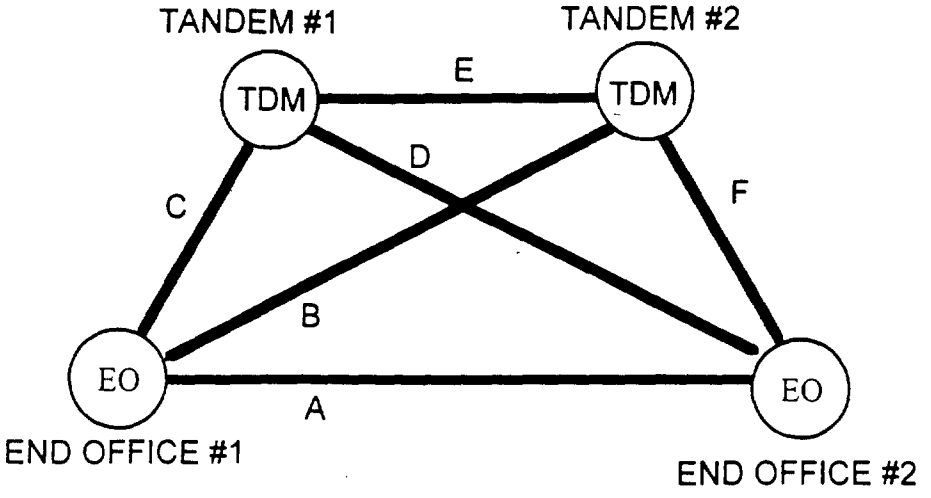

4

ATTACHMENT 4

LOCAL DISTRIBUTION LAYOUT

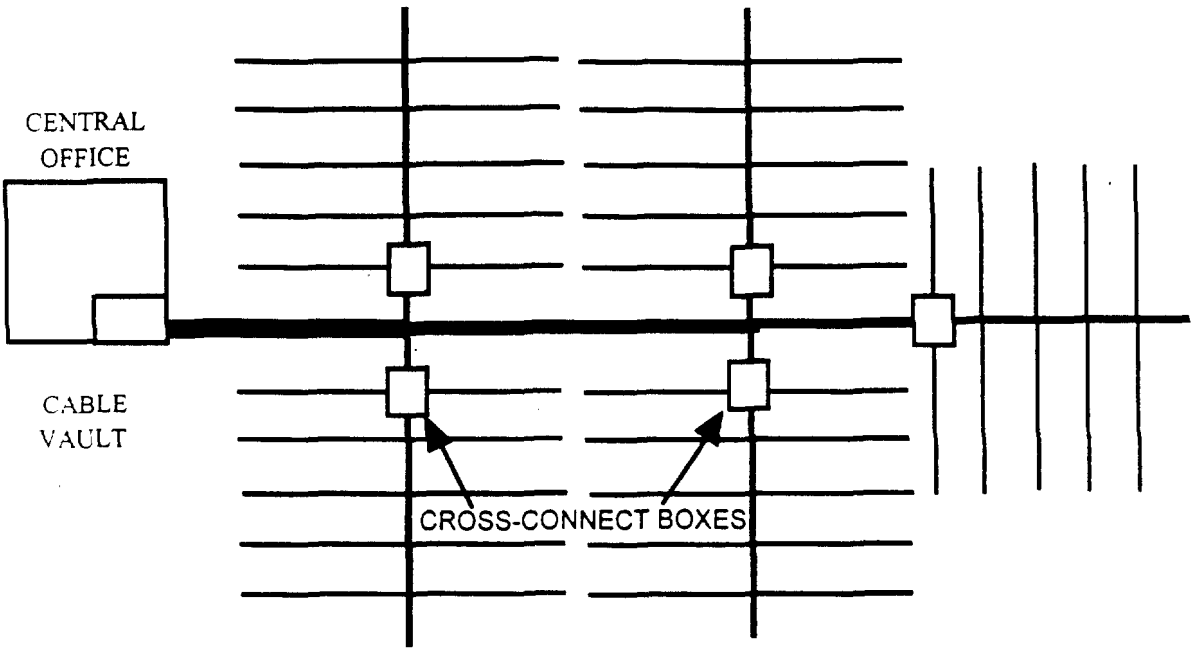

5

ATTACHMENT 5

SIGNALING SYSTEM 7

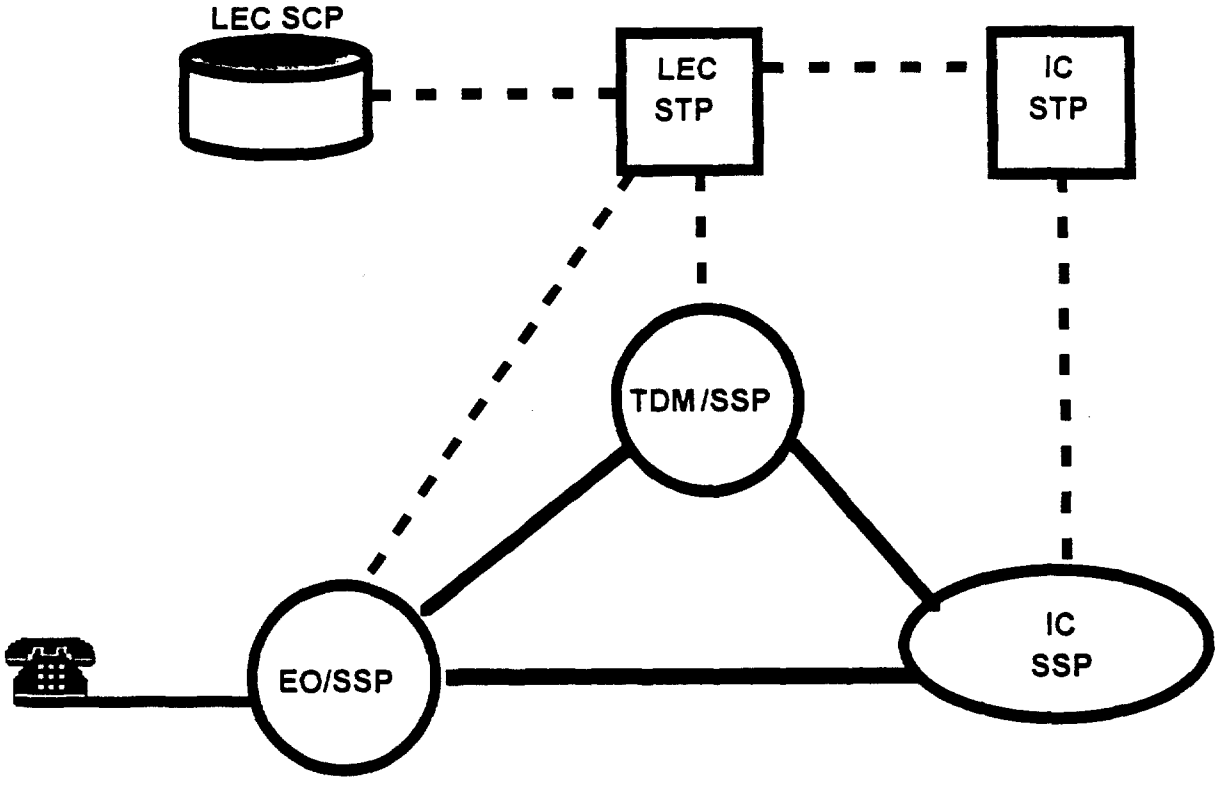

ACRONYMS

EO END OFFICE
IC INTERCONNECTED CARRIER
LEC LOCAL EXCHANGE CARRIER
SCP SERVICE CONTROL POINT (DATA BASE)
SP SIGNALING POINT
SSP SERVICE SWITCHING POINT
STP SIGNAL TRANSFER POINT
TDM TANDEM

ATTACHMENT 6

FULLY REDUNDANT SS7 NETWORK

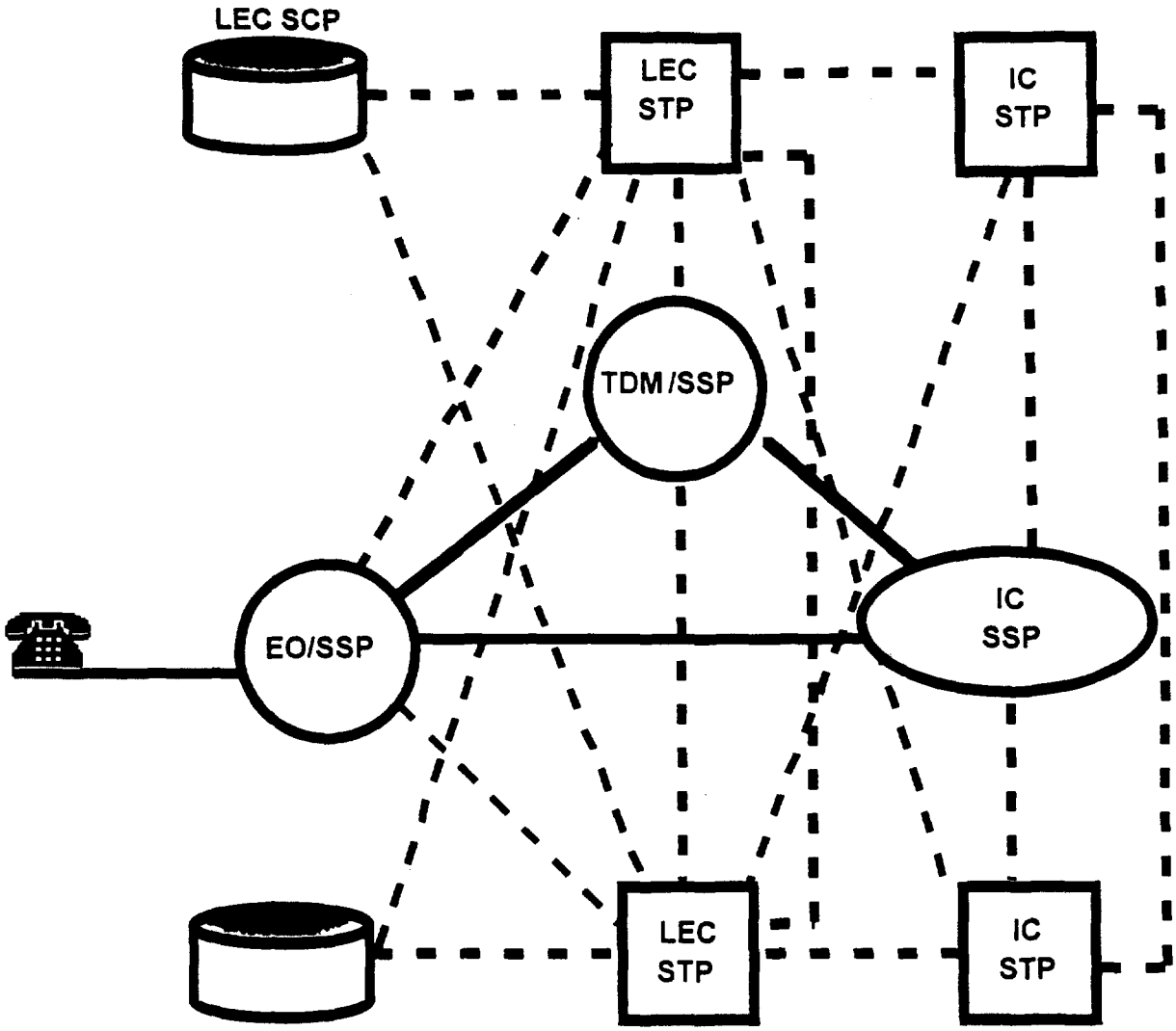

ACRONYMS

EO END OFFICE
IC INTERCONNECTED CARRIER
LEC LOCAL EXCHANGE CARRIER
SCP SERVICE CONTROL POINT (DATA BASE)
SP SIGNALING POINT
SSP SERVICE SWITCHING POINT
STP SIGNAL TRANSFER POINT
TDM TANDEM