THIRD PARTY SERVICE PROVIDER APPLICATIONS

Intelligent networking has the potential to allow companies other than carriers to control the operation of network resources. The customer routing point shown on page 8 is an excellent example. With the CRP, an AT&T 800 customer, such as an airline, has the ability to determine the routing of calls to its 800 numbers depending on information internal to the airline's operations, but not available to the carrier.

Local exchange carriers could offer similar capabilities, but they have resisted doing so. In November 1990, the Coalition of Open Network Architecture Parties (CONAP) petitioned the FCC to conduct an investigation into the detail of BOC switching deployment plans in order to assure that the network of the future would be "modular and transparent." CONAP contended that a "modular and transparent architecture" built on standard interfaces would allow end users to have access to unbundled switch functionalities that they could use to write "service scripts" that would satisfy needs that they identify in the market. According to CONAP, LECs would continue to provide network infrastructure, while end users and enhanced service providers (in addition to LECs) would provide their own services. To address this concern, the FCC published a Notice of Inquiry in December 1991 and opened CC Docket No. 91-346 titled: "In the Matter of Intelligent Networks."

Who had the audacity to think that third parties could implement and offer their own telecommunications services? According to the FCC, CONAP included: Aetna, American Airlines, Boeing Computer Services, Dun and Bradstreet, EDS, Ford, General Electric, J.C. Pennys and Sears. Bell Atlantic and BellSouth responded most positively in 1993, explaining how they would open their networks for service creation by third parties.

A concern of all is the security of the public switched network. The PSN was developed in a monopoly environment. Existing switches and even SS7 were designed to operate in a benign "trusted" environment, where all network resources belonged to the same carrier. This makes the PSN vulnerable when companies other than the incumbent carrier, particularly competitors, have some measure of control.

In August 1993, the FCC published a Notice of Proposed Rulemaking (NPRM) for Docket 91-346. This NPRM stated plans to require LECs to provide third parties with mediated access to LEC intelligent networks. Mediated access for third party service creation would first be provided at LEC Services Management Systems (refer to figure on page 7). At a later date, according to the NPRM, mediated access at the SCP, and eventually mediated access to switches (SSPs) would be provided. No actual ruling has yet been made by the FCC. And, as of mid-1995, even LECs like Bell Atlantic still protect their service creation environments as proprietary and do not allow access to companies they consider potential competitors.

The idea of a third party service provider in telephony parallels the way the Internet works. Anyone can connect a computer to the Internet and offer services, such as

a World Wide Web home page. The opportunities for increased commerce and innovation are being seen daily on the Internet. The PSN could have similar capabilities, but today's obsolete switches cannot provide this in a manner which protects the PSN from crashes and intrusion by hackers.

The discussion below will show how ROADS can provide the capabilities third party providers need, in a robust, open architecture, distributed environment.

VIRTUAL RDTS WITHIN A SINGLE PHYSICAL RDT CONNECT TO TWO OR MORE HOST SWITCHES

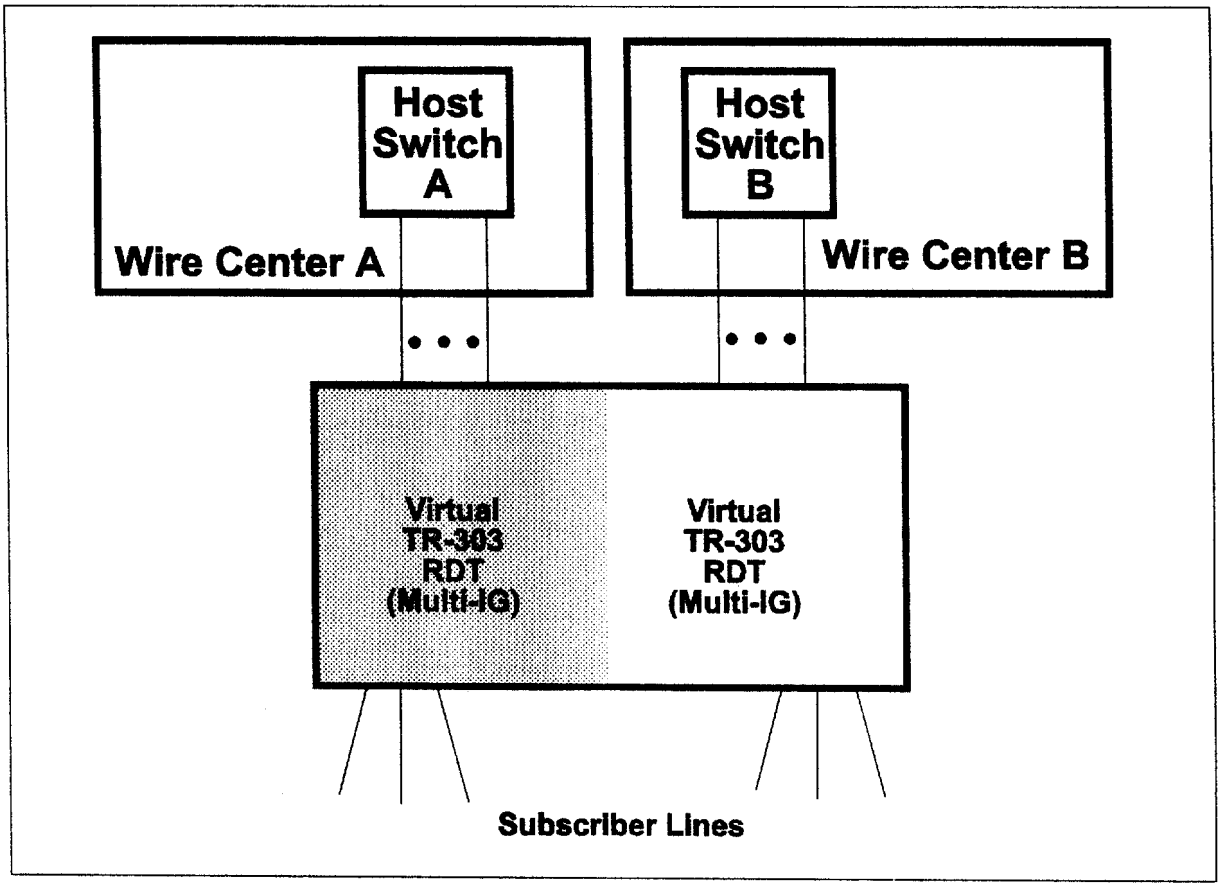

A paper delivered by this author at the 1993 NFOEC showed how the Eaves and Zimmerman model could be expanded to support third party service providers. The approach discussed in this reference applied Bellcore plans to extend TR-303 to support what were then called virtual RDTs. The term finally adopted by Bellcore for this virtual RDT function is a Multi-Interface Group (Multi-IG). The figure above illustrates a single physical TR-303 RDT segmented into two Multi-IG groups. This capability would be required for LECs to connect RDTs to multiple host switches within their own networks as illustrated in the figure below.

USE OF VIRTUAL RDT CAPABILITY TO CONNECT TO TWO OR MORE LEC HOST SWITCHES

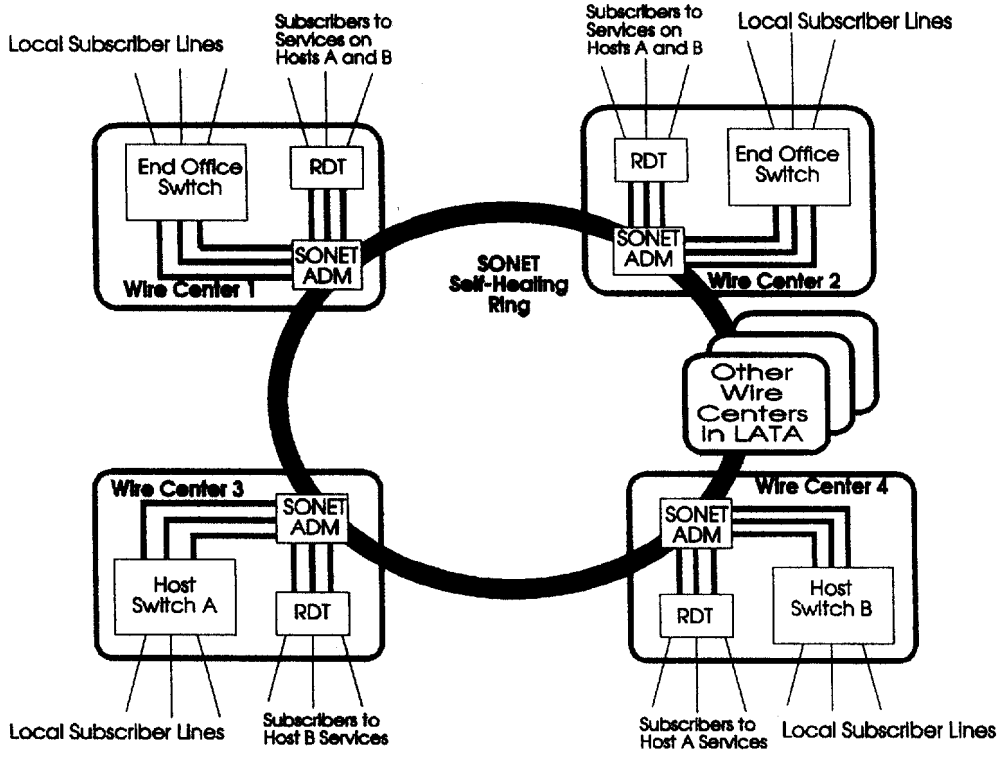

When services are provided using 2 or more Host switches, each physical RDT in a Wire Center provides each Host Switch with a Virtual RDT Interface. Thus, subscriber lines on each RDT are associated with a respective Host Switch based on which switch provides the service subscribed to by each subscriber.

As shown in the figure below, such an approach would also allow a third party provider to connect its switch to the LEC network and efficiently (because of TR-303's concentration capabilities) provide competitive dialtone to subscribers anywhere in the LECs territory. The referenced paper defined a new form of LEC access the author called "concentrated access" based on TR-303's concentration capabilities.

SUPPORT FOR THIRD PARTY SERVICE PROVIDERS USING CONCENTRATED ACCESS

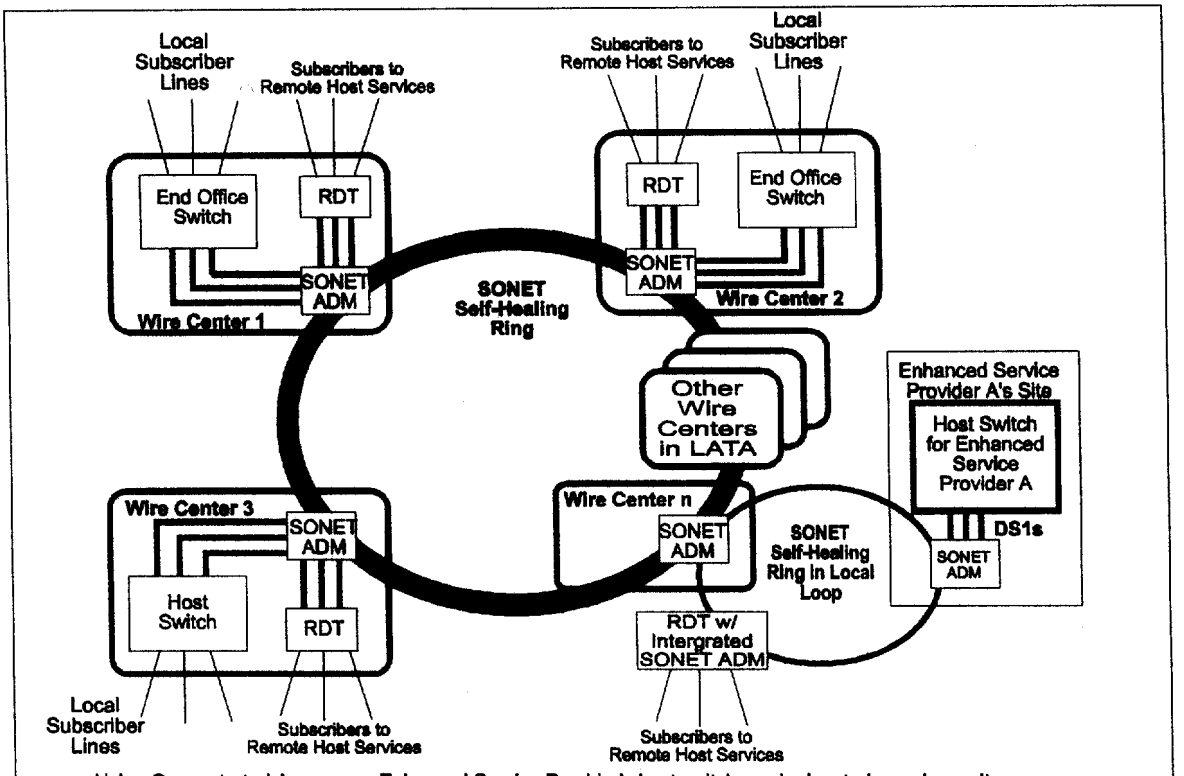

Using Concentrated Access, an Enhanced Service Provider's host switch can be located anywhere. It connects via DS1s to a SONET ADM, then to Virtual RDTs in each wire center which serves subscribers who have chosen the Alternate or Enhanced Service Provider for local service.

The ROADS version of this would allow a third party to provide services without having to purchase a switch. Given the reluctance with which LECs have proceeded thus far in opening their networks to third party service providers, it is doubtful that we will see anything like the capabilities shown in the figure above in this millennium. However, the mere existence of CONAP and the legal expense these companies have borne to try to convince the FCC to force LECs to open their intelligent networks to third party providers **clearly demonstrates market demand for such capabilities**. Thus, following figure shows how a carrier other than an incumbent LEC (in this case a cable TV MSO) could use ROADS to offer not only conventional switch based and IN features, but could harness the entrepreneurial potential of the software industry to create yet undreamed of services.

SUPPORT FOR THIRD PARTY SERVICE PROVIDERS USING ROADS

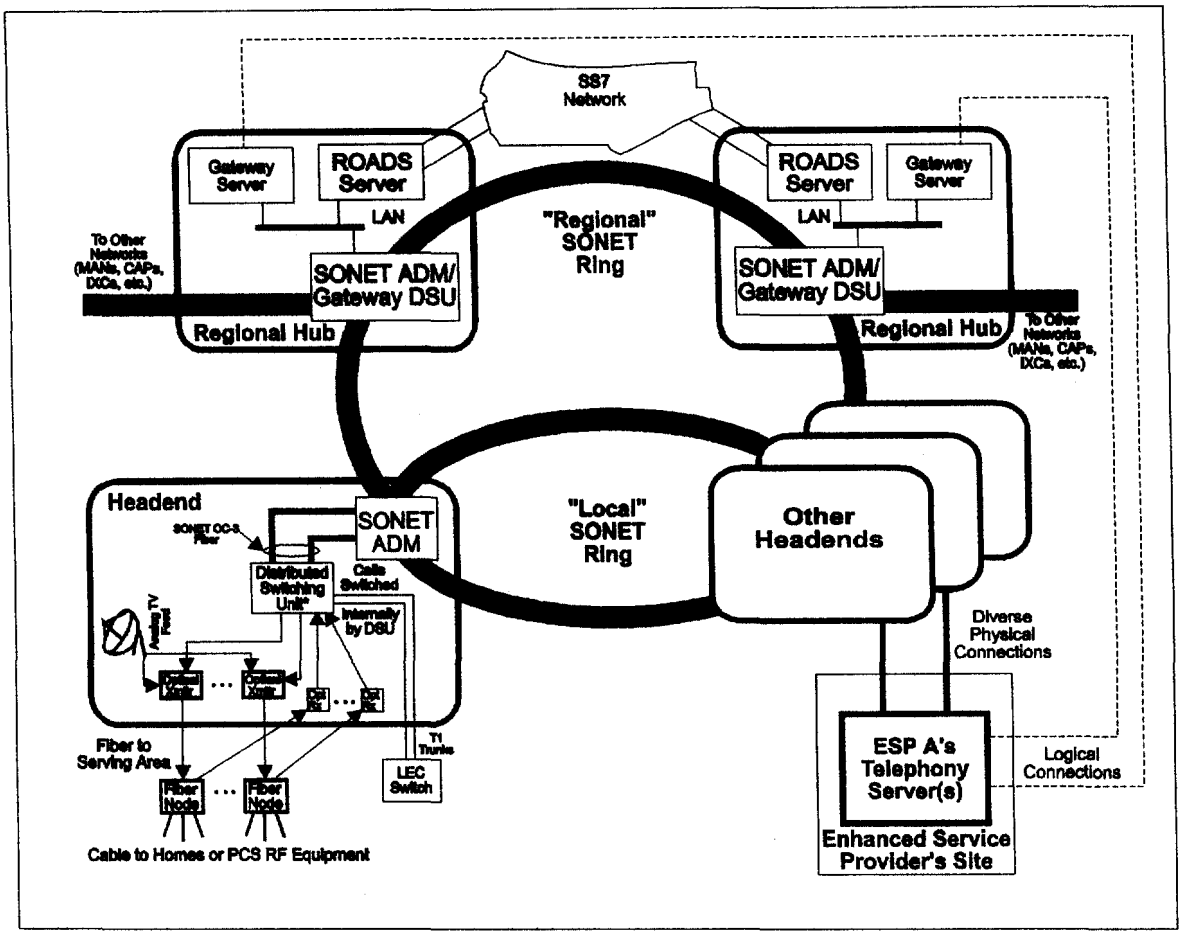

In the figure above, subscribers could access the ESP's services in at least two ways. First, the ESP could be responsible for providing virtual dial tone and all services to the subscriber. In this case the subscriber would identify the ESP as his/her primary LEC (just as the subscriber now identifies a primary inter-LATA carrier). This is the simplest approach.

The Intelligent Network call processing model allows "trigger" events to be defined at a Service Switching Point which interact with IN software via signaling messages. The ESP's server would receive all trigger events for the subscriber's line and have total control of call processing for that line. The ESP's control commands would be validated by the gateway server (which acts as a firewall between the ESP and the carrier's ROADS network). An ESP would only be allowed to send commands which would effect lines for which the ESP is the subscriber's primary LEC. Thus, mediated access would be provided to ROADS intelligent networking resources as discussed by the FCC in its Notice of Proposed Rulemaking in the matter of intelligent networks.

Valid control messages then pass to the ROADS server which manages the DSU on which the subscriber's line is terminated. In this simple ESP model, the ROADS server provides SSP functionality to the ESP's server (via the gateway server), exchanging TR-303 messages with the DSU.

From the point of view of the network, such an approach provides a secure, high availability fault tolerant software environment. If user applications or third party software goes astray, only the calls under the direct control of the "buggy" third party software will be affected. This ensures the same high availability switching services as we are accustomed to in today's PSN while opening call processing to external software control.

The interface between a third party's computer and ROADS gateway servers need not use SS7 as it currently exists. This 64kbps network lacks the speed for the truly intimate distributed processing which we envision between an ESP or User's computer and the IN platforms controlling Distributed Switching Units in the ROADS Model. As mentioned previously, SS7 is also weak when it comes to network security. LAN speed, broadband, interfaces to customer's computers should be supported using the Internet Protocol (IP). Higher level SS7 protocols can easily ride on IP. This can initially be provided by connecting to third party servers with DS1 (or OC1) links via SONET.

ENTERPRISE NETWORK APPLICATIONS

The services of a CO switch, particularly Centrex, when implemented using Intelligent Network call processing primitives, will allow these same types of features to be made available for voice and multimedia/ATM services in enterprise networks as well as the PSN. IN based call processing software deployed on servers within the enterprise network could become like UNIX® or Windows® have to operating systems or Novell's NetWare® is to LANs today. Customers would finally have the control they need to take full advantage of the promise of Computer Integrated Telephony applications.

ROADS ENTERPRISE NETWORK ARCHITECTURE

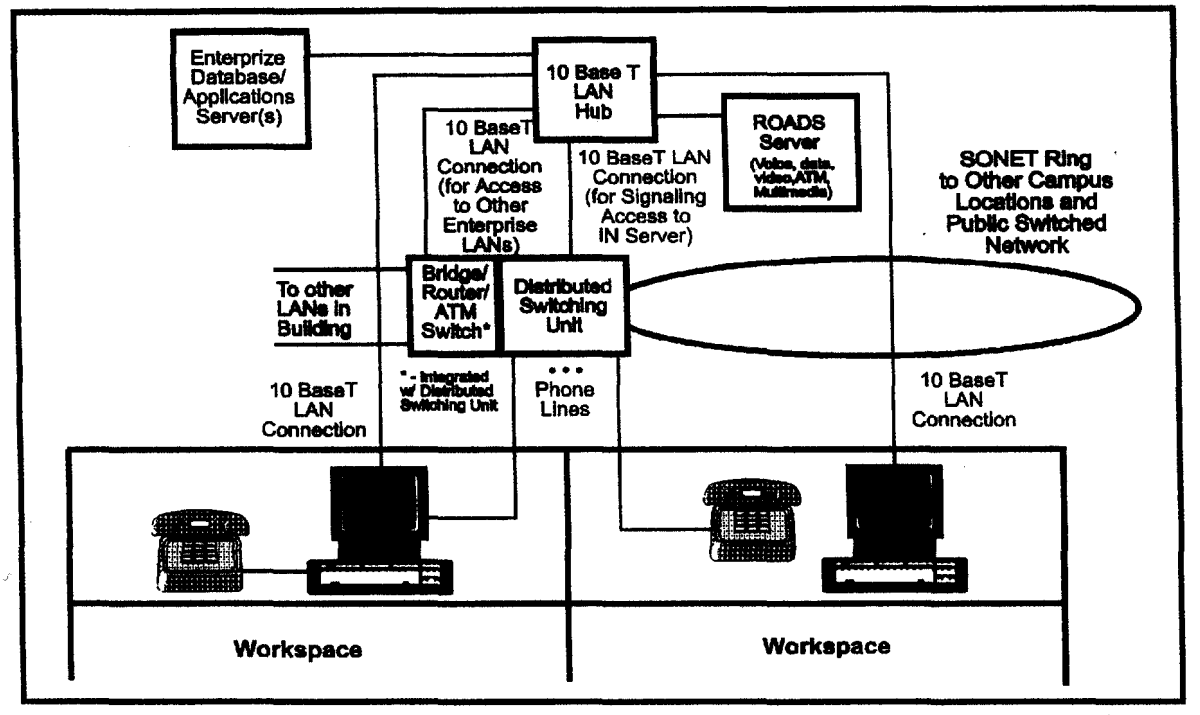

In an Enterprise Network, Distributed Switching Unit(s) absorb PBX and Voice Processing functionality providing LAN based computer applications with intimate access to call processing and signaling capabilities. Key near term benefits are equipment and operational cost reductions associated with integration of Bridge/Router and possibly ATM Switch functionallity with SONET Multiplexer.

Both PCs/workstations and DSUs can act as clients to the ROADS server. The use of conventional telephones and business sets generates transactions from the DSUs to the ROADS server which interprets signaling information, determines call routing and sends responses to the appropriate DSUs to set up calls. Likewise, incoming calls received on conventional PBX trunks terminated to a DSU generate events to the server. For incoming calls received with SS7 or Q.931 (ISDN) signaling, the ROADS server directly receives the common channel signaling message and instructs the appropriate DSU to connect the call as required.

ROADS TO THE SUPERHIGHWAY

We will now present an interesting concept who's time has come: **Making Internet Service Providers (ISPs) into CLECs**. The remainder of this section will show how major ISPs are logical teammates of CLECs and how the ROADS Model can bypass the end office switch to provide ISDN access to the Internet. We will also see how ROADS can support ubiquitous access for voice over the Internet with no originating access charges, thus **redefining "long distance" telephony**.

The figure below shows how a subscriber accesses an ISP. The box on the lower left of the figure represents a subscriber at a home or small office with one or more PCs and one or more phones. Copper loops from the LEC end office (upper left) connect to the subscriber's site. A modem call from the subscriber's PC to the ISP passes through the local CO switch and ends up at the switch serving the ISP's facility (upper right). The ISP connects to the switch with digital circuits, in this case T1s.

INTERNET ACCESS SCENARIO

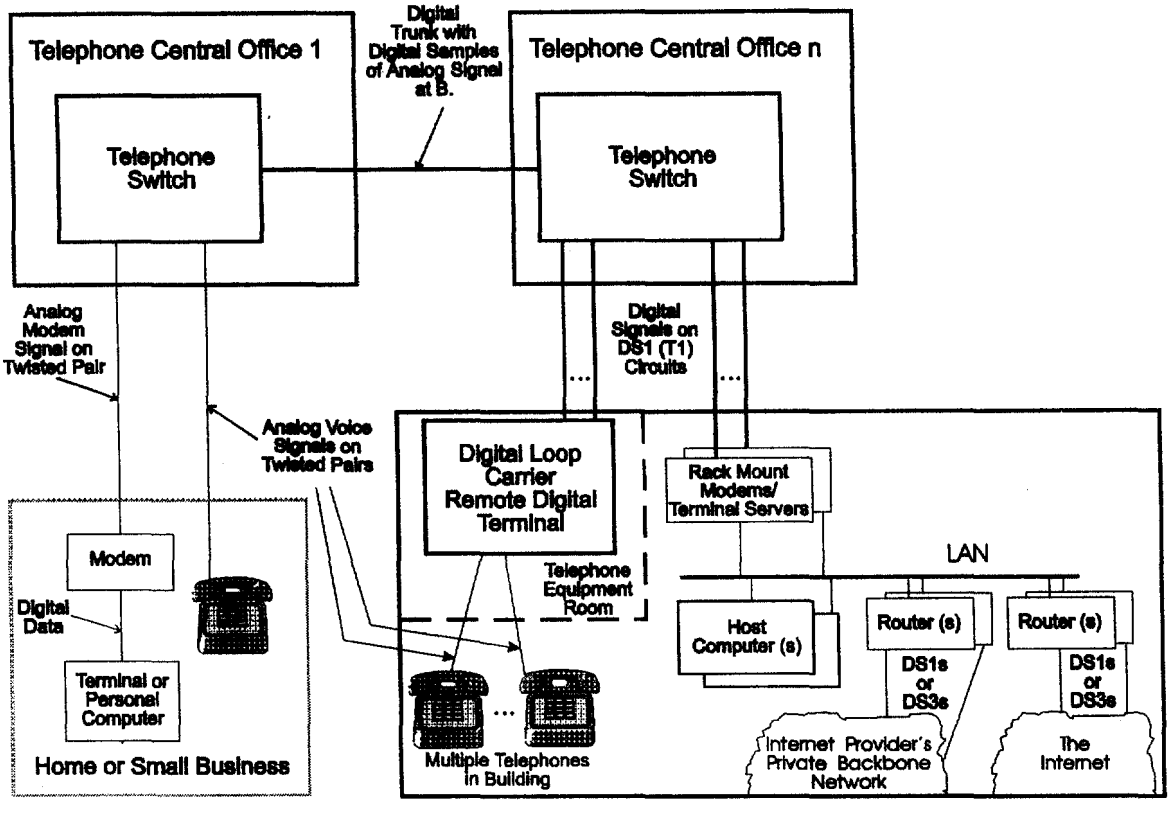

The ISP's facility is shown on the lower right. Phone service for the ISP is shown as being provided via a Digital Loop Carrier in the telephone equipment room of the office building where the ISP is located. Phone service may also be provided via direct lines. The architecture of a typical ISP's equipment is shown. Serious ISPs connect DS1s from the LEC to rack mount modems such as US Robotics' Enterprise Network Hub product. Such a product includes in integral terminal server which connects to a LAN within the ISP's site. An ISP may have several such LANs as required to adequately serve subscriber traffic.

Connected to these LANs are host computers for subscriber services such as e-mail and web pages, etc. Powerful routers connect these LANs to the Internet backbone as well as to the ISP's private backbone. Most large ISPs connect their points of presence together with private facilities. This enables customers who connect to the

ISP's network at different cities to have high bandwidth, high reliability communications. Connections with other Internet subscribers is accomplished via the public Internet. These routers would normally connect via DS3 circuits at 45Mbps.

The next figure shows how incumbent LECs are using TR-303 Digital Loop Carrier products to bypass their CO switches for Internet access. In doing this they have proven the technical feasibility of switching calls external to the end office switch.

INTERNET ACCESS SCENARIO W/LEC SWITCH BYPASS

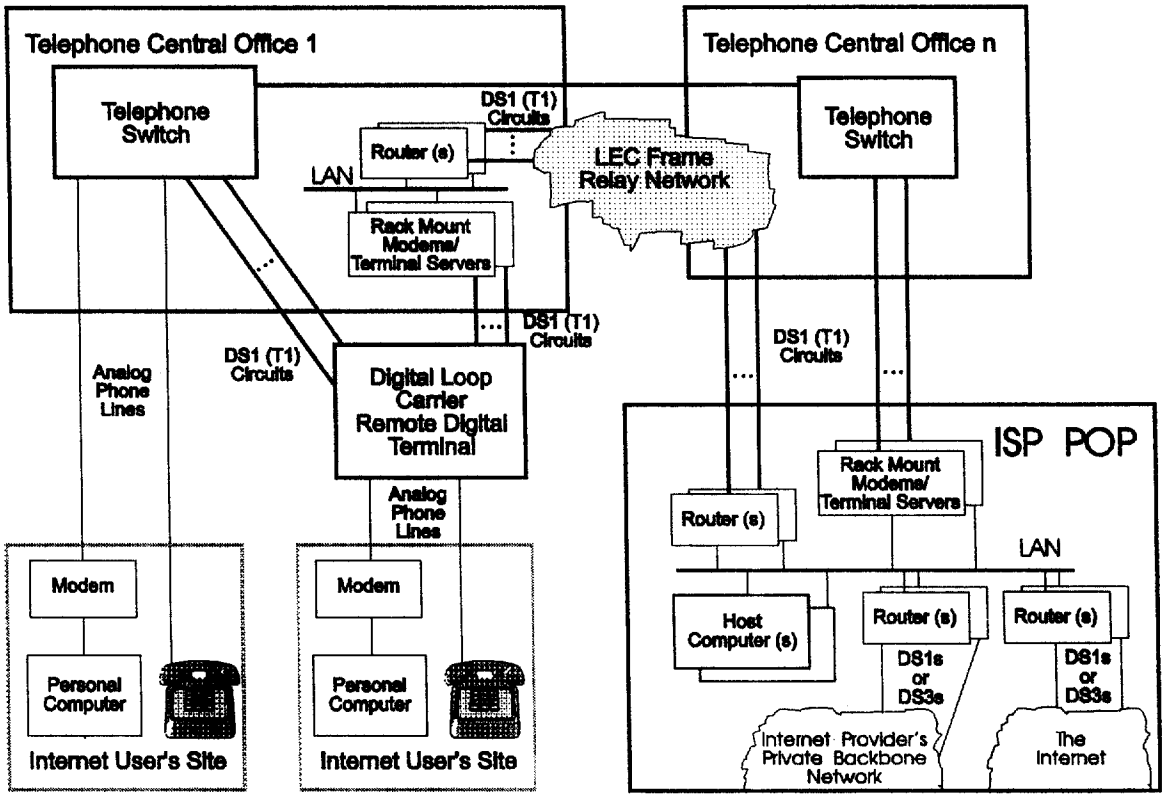

On the lower left are two Internet user sites. The analog phone lines for the user on the far left connect directly to the central office switch (upper left). Such users' calls to ISPs cannot be shunted off prior to the telephone switch.

The other Internet user's site connects to the telephone switch via a digital loop carrier. The DLC is what enables calls to bypass the switch. One vendor's DLC product listens to all numbers being dialed. If a call is made to a known ISP access number, the DLC connects the call to a modem pool (directly above the DLC in the figure). Then the DLC tells the CO switch that the person hung up (so the switch doesn't try to complete the call).

When the person dialing the ISP is connected to the modem pool, the modem answers and connects with the user's modem. A terminal server integrated with the

modem pool connects the user to the ISP using a frame relay packet connection from the Local Exchange Carrier to the ISP.

For this sort of arrangement to be legal the ISP must agree for the LEC to provide such a service. Bypassing the telephone switch is in the LEC's interest because it avoids having to add expensive upgrades to CO switches. It appears to be in the ISP's interest because the LEC pays for the modem pool and terminal servers normally at the ISP's Point of Presence (POP).

As can be seen from the diagram, little needs to be added to the setup in the LEC Central Office at the upper left to make it a full blown ISP POP. The LEC can just as easily connect its router directly to the Internet as it can connect it to the ISP's POP. Furthermore, LECs can fund the capital for the additional equipment required from the regulated side of the business, since bypassing the switch for Internet access prevents the public telephone network from being overloaded.

What ISP's may be overlooking, however, is that the LECs will soon openly declare war on them. This is inevitable, particularly with the threat of voice over the Internet. Then the LECs can call the ISP's subscribers, who's phone numbers can be logged by the LEC, and mention that the LEC is already providing the customer's Internet access and merely passing the packets along to the customer's current ISP as a middle man. Since the LECs have already paid for most of the equipment with telephone rate payers money, they can take over the ISPs' customers with virtually no capital cost. This, combined with the natural economies of doing both telephony and Internet access, not to mention the staying power of the LEC's deep pockets, will allow incumbent LECs to prevail in price wars with ISPs.

We at SONETECH believe that there is only one way for ISPs to survive in the upcomming confrontation with incumbent LECs concerning access charges and long holding times on one side and the LECs' own desires to be ISPs on the other. That is to either team with a competitive LEC (CLEC) or become CLECs themselves. Incumbent LECs have very little incentive to buy out (rather than just squeeze out) small ISPs. While larger ISPs with their own national backbones may be a more attractive acquisition target, it would probably be more profitable for these ISPs to become full blown competitive carriers than be bought out.

The figure below extends the Internet Access Scenario to include SONET fiber connectivity between the LEC wire center and the ISP. In this case the DS1s from the switch which formerly connected directly to the rack mount modems/terminal servers go from the switch to a SONET Mux. The fiber terminates in the building with the ISP on a SONET Mux which then connects via DS1s to the Digital Loop Carrier and the ISP's modems.

INTERNET ACCESS SCENARIO WITH SONET CONNECTIVITY

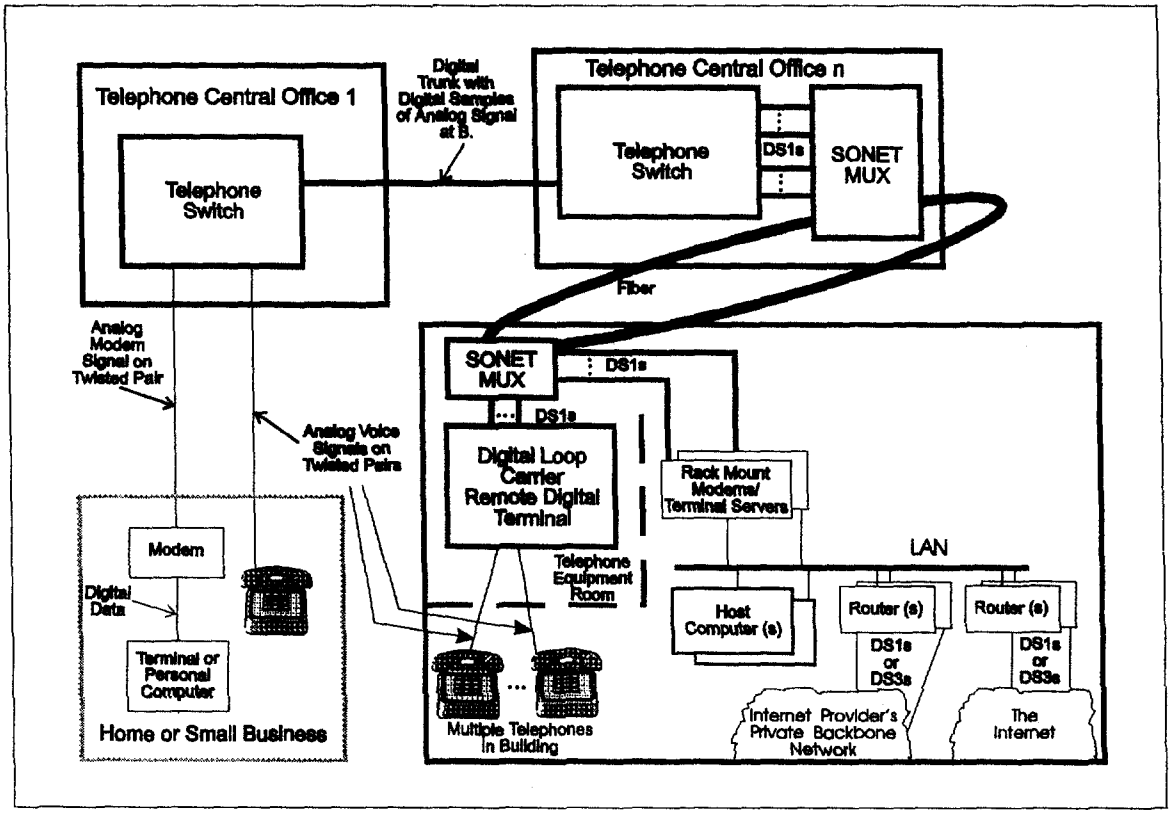

Let us follow the flow of a call from the subscriber on the left to the ISP at the right. The modem connects to the end office switch using an analog twisted pair phone line. At the switch, the analog signal from the modem is digitally sampled 8000 times a second using an 8 bit sample. Thus, the bandwidth required is 8000 samples per second X 8 bits per sample, or 64,000 bits per second, the speed of a DS0. This digital representation of the audio signal is routed through the originating switch and carried by digital trunks and intermediate tandem switches through the LEC network to the switch serving the ISP's site. Since the ISP uses digital connectivity to the switch for its incomming modem lines, the digital samples of the modem tones are delivered in tact to the ISP.

In the following figure, the SONET Mux at the ISP location in combined with a GR-303 compliant Digital Loop Carrier.

INTERNET ACCESS SCENARIO WITH SONET CONNECTIVITY PROVIDED BY INTEGRATED SONET MUX/RDT

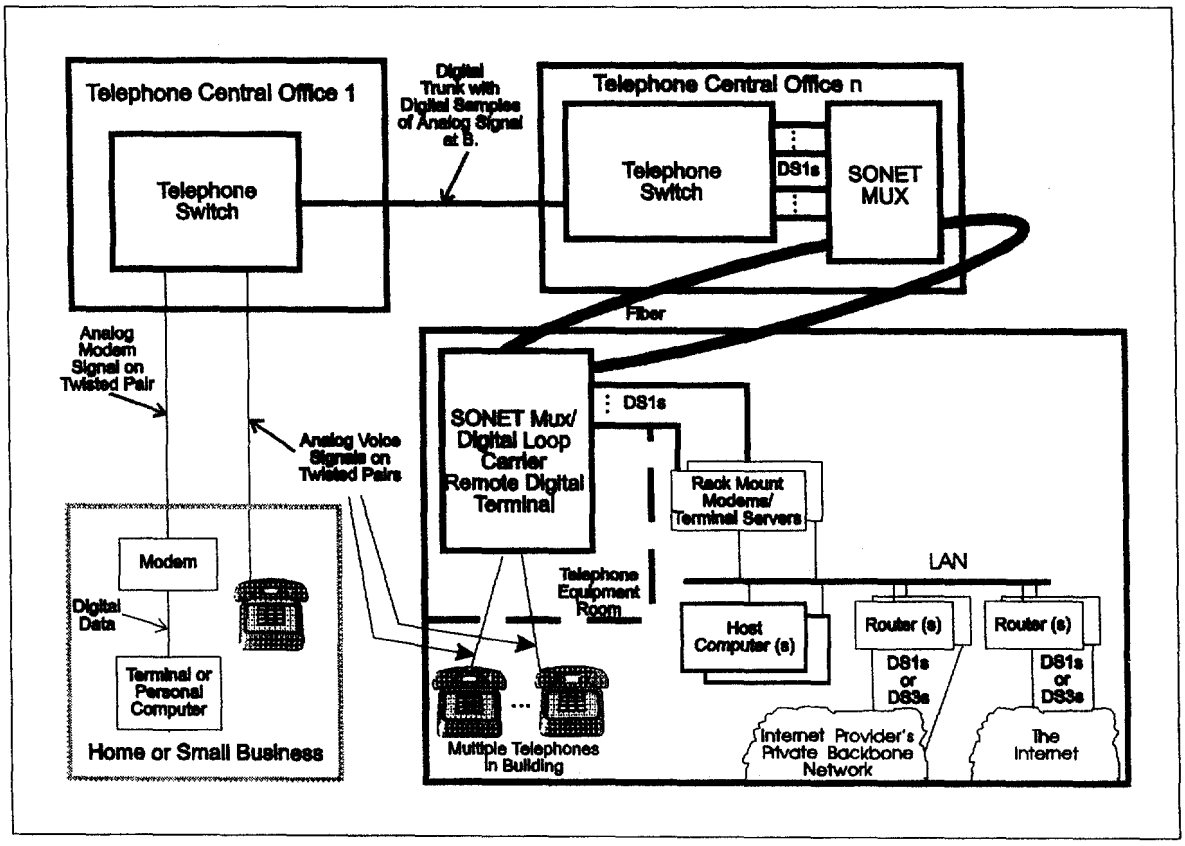

INTERNET ACCESS PROVIDED BY INTEGRATED SONET MUX/RDT WITH DSP RESOURCE CARDS (A ROADS DISTRIBUTED SWITCHING UNIT)

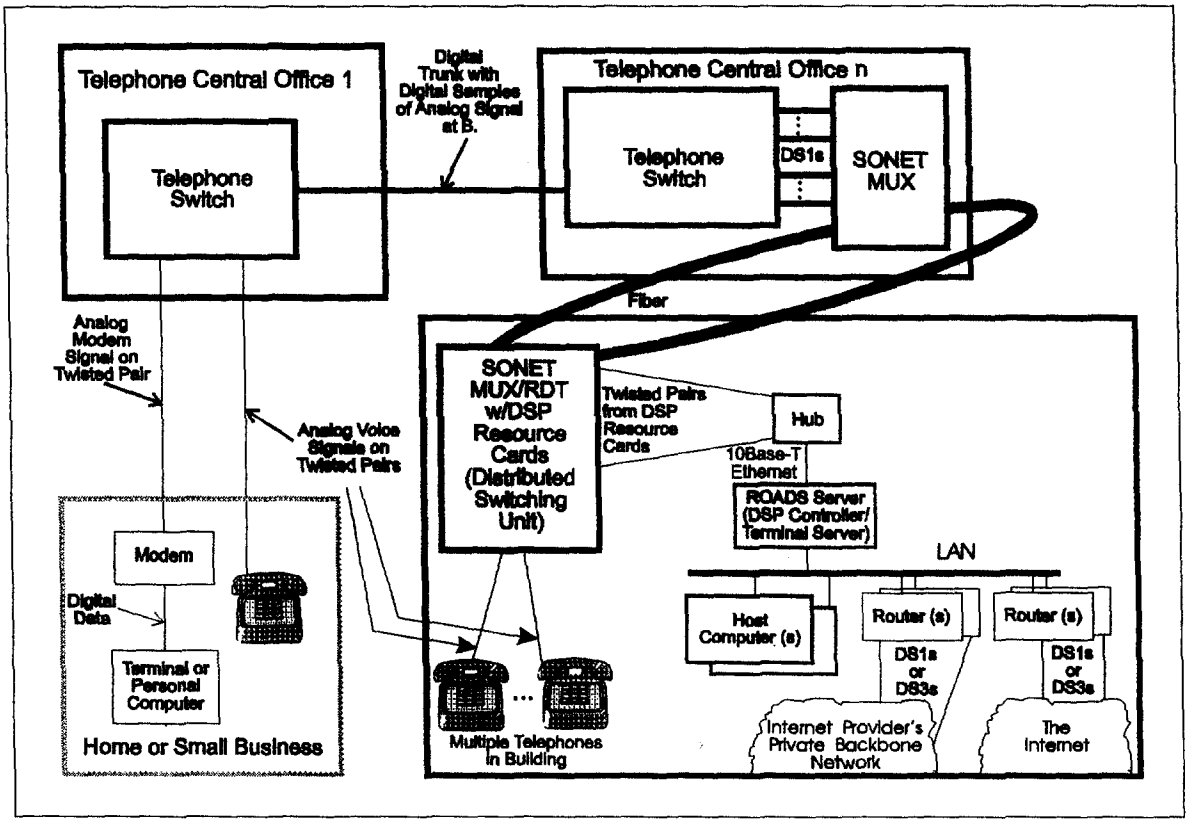

In the figure above we add Digital Signal Processor (DSP) resource cards to the integrated RDT/SONET Mux at the ISP location. These DSP resources provide the tone plant capabilities required to turn the RDT into a ROADS Distributed Switching Unit. Until the publication of this addendum to the original ROADS Report published by Probe in August 1995, little has been said about how the required tone plant capabilities could be provided. The Computer Telephony Integration (CTI) industry has extended the state-of-the-art in voice frequency DSP technology in the last year or two. DSP chips are available which accept an entire T1 or E1 worth of bandwidth and can be multi-tasked to perform different functions for each voice channel.

Functions for which DSP software is available include:
- DTMF generation/interpretation
- Dial tone, and other call progress tone generation
- Multi Frequency signaling
- Conferencing
- Echo cancellation
- Caller ID interpretation/generation

- Text to speech
- Voice compression/expansion
- Speech recognition
- Fax modem
- Data modem

A Distributed Switching Unit (DSU) is essentially a supercharged CTI platform or Intelligent Peripheral with a SONET backplane. The DSP resource cards are plugged into the backplane of a GR-303 Digital Loop Carrier RDT instead of one or more voice channel unit cards, transforming the RDT into a DSU. The slots where channel units plug into a GR-303 RDT are wired for 4 or more copper pairs. Conveniently, LAN standards include the use of twisted pair building wiring for transmission of 10 megabit or 100 megabit Ethernet. So, the copper pairs already wired to the RDT backplane for telephony allow the DSP resource cards to connect, via a LAN hub, to a ROADS server which provides for control of the DSP resources and acts as a terminal server.

The DSU and ROADS Server replace the rack mount modem/terminal server previously used by the ISP for modem access. This integrated solution eliminates sufficient components from the traditional approach that the modems are virtually free. In addition, this provides a rugged installation built to the reliability standards of the public switched telephone network.

If the ROADS solution only replaced data modems at an ISP site at substantially lower cost, its use might still not be so compelling. But, **the same equipment with additional software in the ROADS server can provide the ISP with the capability for ubiquitous voice over the Internet, instantly putting the ISP in the position of both a CLEC and an IXC.**

Suppose the subscriber at the home or business on the left calls the ISP access number from a regular telephone. The analog voice signal is digitized at the end office switch and carried to the ISP site where ringing signaling is received at the DSU, indicating an incomming call. The DSP resource cards can be data modems for Internet data access while at the same time functioning as CTI voice processing resources. If you have ever accidentally called a modem access line or a fax machine, you know what it sounds like: the same thing you hear in the speaker of your PC when you make a modem or fax call. This is what you would hear if you call an ISP access number from a regular telephone today. However, the DSP resource card would respond to incomming ringing in a different way.

INTERNET ACCESS PROVIDED BY INTEGRATED SONET MUX/RDT WITH DSP RESOURCE CARDS (A ROADS DISTRIBUTED SWITCHING UNIT)

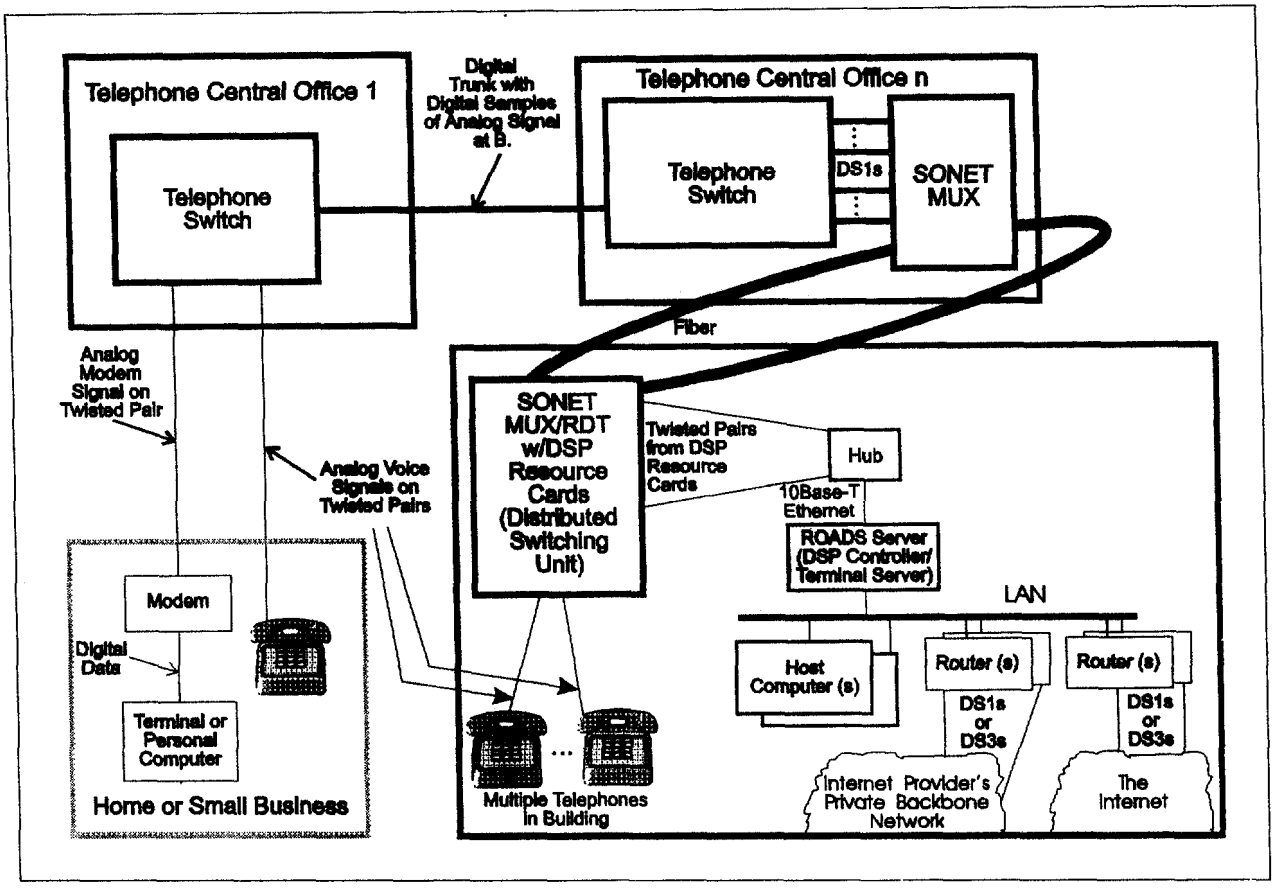

Instead of instantly putting modem carrier tone on the line, the DSP would be directed to play a message. If you call your ISP in the future you might hear something like this: "If you want to place a long distance call, dial 1 plus the area code and the number. For other options press star." If the user is dialing an Internet voice call, 1 + the area code and the number are dialed. If a second or two goes by without the caller dialing a DTMF 1 (or star), the DSP would be instructed to function as a data modem. Thus, modem carrier would be placed on the line and a typical Internet access call from a computer would be connected as usual.

If the DSP detects DTMF input, it signals the ROADS server and the server software instructs the DSP to collect additional DTMF digits and send them via the LAN hub, to the server. The server determines if the dialed number is valid and if the ISP has a point of presence (POP) that serves the NPA/NXX entered If it does, the ROADS server sets up a TCP/IP connection to the appropriate ROADS server at the destination POP.

The destination ROADS server finds an available channel to the LEC switch which serves the destination POP, and places a local call to the destination phone number. The

DSP resources in the DSUs at the originating and terminating DSUs each perform voice compression of the incomming signal and the compressed data packets are passed to the ROADS server which routes them over the Internet to the ROADS server and appropriate DSU at the other end of the call.

Since the ISP's access lines must be business lines, they will be subject to a minutes of use charge for the outgoing portion of the call. However, there is no charge for originating access, nor is there a minutes of use charge for the long distance portion of the call carried via the Internet. While the packet delay of the Internet would make the quality of such a call inferior to that of a toll grade voice call today, the cost would be substantially less, approaching zero cost (see Gary Kim's article in the July/August issue of X-Change magazine). Many customers will find this reduced quality acceptable at the cost. Such calls can be made internationally reducing costs greatly over international long distance.

Furthermore, since large ISPs have their own backbone networks which connect their POPs, those subscribers desiring near toll grade quality, and willing to pay a little more, can be routed over the ISP's network rather than the actual Internet. Such a network can be provided using SONET/ATM links with quality acceptable for even a video conference.

For example, many corporations have private voice networks which are provisioned with fewer trunks than the PSN would be for the same expected traffic, thus these networks have a higher blocking probability. Of course such networks allow trunk queuing to allow user calls to be routed as soon as the next trunk becomes available. These same corporate networks use compression techniques to send voice over 32 kbps or even 16 kbps circuits. These corporations find the reduced quality acceptable given the savings.

ISPs can make long distance voice service available to subscribers at several quality levels at differing prices, a capability the existing public switched telephone network can't do without replacing or greatly enhancing existing IXC tandem switches. The existing PSN provides Cadilac service and subscribers have to pay for this level of quality even if they would be willing to deal with reduced quality to obtain lower costs.

With the case for implementing ROADS at an ISP's POP clarified, lets look at another way ROADS can benefit ISPs. What is the "killer app" for ISDN today? It's Internet access, of course. Suppose ISPs identify LEC wire centers where they have 10 or more current ISDN subscribers. ROADS DSUs (DLC RDTs) can be placed at these wire centers and, using loop resale, the loops from these customers can be patched from the LEC switch (or the LEC RDT which brings the ISDN signal to a centralized ISDN switch using the Eaves and Zimmerman model) to the ISP's ROADS DSUs.

While the ROADS server software to provide full voice switching features could take a long time to develop, the software required to bypass LEC switches for ISDN

access to an ISP is minimal. The ISDN D channel is nailed up from a DLC to the LEC switch. This 16kbps data channel provides for signaling between the subscriber and the switch using the Q.931 protocol. It also allows for D channel packet data to be transmitted using the X.25 protocol.

When a subscriber connects to an ISP using ISDN, Internet Protocol (IP) packets can be encapsulated in an X.25 packet and sent via the D channel. The D channel can also be used to set up a B channel connection between the subscriber and the ISP via the LEC circuit switched network. Often a minutes of use charge is levied by the LEC for ISDN connect time. Since these calls are for Internet access, they average long holding times which consume extraordinary resources within LEC switches and, thus, add to the LEC cost to provide ISDN service.

Instead of standard ISDN, which was developed in the 1980s when X.25 was the packet standard, what Internet users want is Internet access using IP. We call this updated ISDN service using ROADS "ISPN" (for Internet Service Provider Networking). Rather than having the D channel nailed up to the LEC switch, it would be nailed up to a ROADS DSU at the ISP's POP. This would provide the user with continuous 16kbps IP connectivity to the Internet 24 hours a day. When the subscriber's usage starts to cause queuing on the D channel, the ROADS server detects this and automatically sends the GR-303 Common Signaling Channel commands to the local and remote DSUs to connect a B channel. If bandwidth requirements still cause excess queuing, the second B channel would be connected. When offered packet loads decrease for a period of time one, and eventually, the second B channel would be automatically dropped.

Such an approach totally eliminates LEC switches and allows the ISP to offer a bundled ISPN Internet access service for substantially less than the combined LEC and ISP charges the subscriber would have to pay for Internet access using ISDN. Leading Digital Loop Carrier manufacturers are also introducing DSL options as plug in cards. Thus, there is no dead end technology wise with such platforms. **ROADS can make ISPs into competitive phone companies, indeed into full service network providers.**

INTER EXCHANGE CARRIER NETWORK APPLICATIONS

ROADS was originally conceived as a replacement for end office switches, however, research evolved to reveal benefits of ROADS to IXCs as well as LECs. With the ROADS model, SONET rings perform the function of the switching network (or fabric) of a conventional switch. Earlier versions of this paper included detailed descriptions of how ROADS technology could help out the aging IXC tandem switch.

We have since concluded that such efforts are fruitless. We now believe that, like Class 5 switches, Class 4 and above switches are also obsolete and circuit switched tandem switches will be sidestepped by users (both consumers and businesses) in favor of packet voice over intranets and the Internet.

Thus, not only are today's incumbent LECs stuck with billions of obsolete Class 5 switches, but IXCs are also stuck with billions in obsolete tandem switches.

ROADS SERVER SOFTWARE DEPLOYMENT

Initially ROADS would provide narrowband voice and data services, including narrowband ISDN (N-ISDN) and ATM based data features (such as Internet access and LAN interconnection) which ROADS uses internally to support distributed computing. ATM based video and multimedia services are essentially an extension of ATM's data switching capabilities. Broadband ISDN (B-ISDN) services are based on the IN model and SS7. The signaling protocol standard for ATM is the broadband ISDN user part (B-ISUP).

Narrowband services implemented in the ROADS server software will be designed with broadband in mind, with maximum software reuse from narrowband to broadband. Above a certain level, ROADS server software does not care whether it is setting up a 64kbps circuit for voice or an ATM switched virtual circuit for broadband services. In architecting ROADS and its supporting server software, the point of view is not: "We are building the model XXX switch and its associated software." but, rather: "We are developing an architecture and network operating system for the information superhighway."

SONETECH®
Services-oriented Open Network Technologies, Inc.
109 Kale Avenue, Sterling, VA 20164 Voice: (703) 450-6670 Fax: (703) 406-3646

Conclusions

- ROADS Can bring Open Systems to Telephony
- Systems Integrators/VARs/Carriers can build Telephony Networks like they do Enterprise Computer Networks
- Integrators, Software Developers, Carriers, and Enhanced Service Providers can provide applications software (Services), as is the case in the computer industry today.
- Key Technologies are:
  - Intelligent Networking/Voice Processing/CTI
  - Network Management/TMN
  - SONET/SDH/ATM
  - GR-303
  - Internet Access/Voice over Internet