LEVINE, BLASZAK, BLOCK & BOOTHBY
1300 CONNECTICUT AVENUE, NW
SUITE 500
WASHINGTON, D.C. 20036-1703
(202) 223-4980
FAX (202) 223-0833

EX PARTE OR LATE FILED

January 23, 1997

William F. Caton
Secretary
Federal Communications Commission
1919 M. Street, N.W.
Washington D.C. 20554

Re: Ex parte contact in CC Docket Nos. 96-262 and 96-263.

Dear Mr. Caton:

On January 22, 1997, Colleen Boothby, Steve Stewart of IBM, Paul Misener of Intel, Fiona Branton of the Information Technology Industry Council, and Les Vedesz of Intel, met with Commissioner Susan Ness; James Casserly, Senior Legal Advisor to Commissioner Ness; David Siddall, Legal Advisor to Commissioner Ness; Commissioner Rachelle B. Chong; Suzanne Toller, Legal Advisor to Commissioner Chong; and James R. Coltharp, Mass Media Legal Advisor to Commissioner Quello, to discuss the above-referenced dockets on behalf of the Internet Access Coalition.

The participants discussed local network technologies suitable for data services and a study conducted by Economics and Technology, Inc., which is included as an attachment to this letter.

Pursuant to 47 C.F.R. Section 1.1206(a)(1), two copies of this letter are being filed with the Secretary of the Commission today.

Sincerely,

Colleen Boothby

Colleen Boothby

Attachment

290/axsre4m/122exparte.doc

No. of Copies rec'd 0+2
List ABCDE

JAN 24 1997

THE EFFECT OF INTERNET USE ON THE NATION'S TELEPHONE NETWORK

Lee L. Selwyn
Joseph W. Laszlo

prepared for the
Internet Access Coalition

January 22, 1997

ECONOMICS AND TECHNOLOGY, INC.
ONE WASHINGTON MALL • BOSTON, MASSACHUSETTS 02108

Copyright © 1997 Economics and Technology, Inc.
All rights reserved.

This document may not be reproduced, in whole or in part, by photocopying, electronic, or other means, without the express written consent of Economics and Technology, Inc., One Washington Mall, Boston, Massachusetts 02108 USA.

Table of Contents

THE EFFECT OF INTERNET USE ON THE NATION'S TELEPHONE NETWORK

EXECUTIVE SUMMARY

1. INTRODUCTION 1

Data communications traffic poses no significant threat to network integrity at the present time. 3

The BOC studies overestimate the costs data traffic imposes on their networks, and overlook the fact that the increase in data communications traffic has produced additional revenues that far exceed the costs of accommodating that traffic. 3

The long-term solution for accommodating increased data traffic lies in the stimulation of competition and the deployment of appropriate data-friendly network technologies. The imposition of per-minute "access charges" for the use of the current circuit-switched network is not the "solution" to any "problem" that may exist. 4

2. NETWORK AND SWITCH ARCHITECTURE 5

The modern local exchange telephone switching architecture can readily accommodate the limited cases of high-use ISP/ESP activity cited by the BOC studies. 5

A closer examination of the components of a typical Class 5 switch helps clarify how the switch operates, and identifies the limited portions of the switch architecture in which blocking can occur. 9

ILEC tariffs often apply premium charges for, and thus deter use of, the most efficient service configuration for high-use subscriber lines. 13

Disproportionate growth in off-peak demand by Internet and other on-line services users has the effect of reducing the average per-minute cost of local telephone network traffic for all PSTN users 16

Any physical or functional similarity between PSTN use by interexchange carriers and by ISPs is both coincidental and immaterial, because such similarities also exist between IXC use and that of any number of other end users of local network applications. 17

3. BOC INTERNET IMPACT STUDIES: GENERAL ASSESSMENT 19

The BOC studies that have been submitted to the FCC, as well as several recent claims made by senior BOC officials, overstate the severity of the congestion that may be caused by data traffic on the PSTN and ignore significant sources of revenue. 19

The BOC studies rely entirely upon anecdotal evidence gleaned from a few isolated, worst-case central offices that were specifically selected because of their unusual traffic conditions. 19

A careful examination of the various BOC impact studies compels the following specific conclusions 22

Internet use is not responsible for disproportionately increased PSTN costs. 22

Internet and other data communications users are major sources of increased BOC revenues. 23

The growth of ESPs/ISPs has created significant revenue streams for the BOCs directly attributable to data traffic on the PSTN. 25

Use of the public telephone network for Internet and on-line service access is not out of proportion to the subscriber access lines that have been installed to support such use. 28

The BOC studies fail to distinguish between inefficient LCM and efficient trunk port ISP/ESP serving arrangements, and attribute all ISP/ESP use to the former. 30

BOC statements on the congestion issue incorrectly attribute certain service problems internal to the Internet itself as causes of claimed traffic problems on the PSTN. 30

BOC efforts to apply access charges to ISPs/ESPs should be considered in the context of the BOCs' own intentions with respect to entry into and development of the Internet service market. 32

4. BOC INTERNET IMPACT STUDIES: INDIVIDUAL STUDY ASSESSMENTS 35

The individual BOC and Bellcore Internet impact studies ignore or exclude relevant facts, producing essentially the same inaccurate conclusions. 35

Pacific Telesis 35

U S West 39

NYNEX 42

Bell Atlantic 44

Bellcore 46

5. CONCLUSION 51

The BOC studies present an inaccurate picture of the effect of data traffic on their networks, overstating the costs and congestion, while understating the revenues generated. They do not justify the imposition of access charges upon ESPs and ISPs. 51

The long term solution for accommodating increased data traffic on local ILEC networks lies in the stimulation of competition and in the deployment of appropriate *data-friendly* transmission technologies, and *not* in the imposition of access charge for use of the circuit-switched PSTN. 52

Appendix A: Second Lines Attributable to On-Line Service Use — ETI Analysis

Executive Summary | THE EFFECT OF INTERNET USE ON THE NATION'S TELEPHONE NETWORK

The explosive growth of the Internet and online services has generated considerable public discussion about the need for our national communications infrastructure to adapt to emerging technology so that consumers will have affordable access to new interactive services and technologies as they emerge.

At issue is how best to accommodate increased data traffic on local public networks. Before identifying the most appropriate transmission technologies and deployment plans, it is critical to conduct an objective assessment of the current situation, including the impact that the current level of Internet and other online service traffic is actually having on the telephone network.

In making that assessment, this Study concludes:

- Data communications traffic poses no significant threat to network integrity at the present time.

- The increase in data communications traffic has produced additional revenues for the local exchange carriers that far exceed their costs in accommodating that traffic.

- The long-term solution for accommodating increased data traffic lies in the stimulation of competition and in the deployment of appropriate data-friendly network technologies, and not in the imposition of per-minute "access charges" for use of the current voice-oriented circuit-switched network.

Several Bell Operating Companies (BOCs) have recently claimed that the growth of data traffic, mainly calls to Internet Service Providers (ISPs) and other Enhanced Service Providers (ESPs), is clogging the public switched telephone network (PSTN) and is causing service to the public at large to deteriorate. To support these claims, the BOCs and Bellcore, have released studies that purport to quantify the costs and other impacts of ISP/ESP traffic. These studies, however, are not comprehensive assessments of the impact of data traffic on local telephone networks. Rather, they rely on anecdotal evidence drawn

from a few unrepresentative central offices, along with some theoretical claims. An examination of these studies reveals that the BOCs' congestion claims are overstated and their assertions that they are inadequately compensated for data traffic ignore substantial revenues attributable to such traffic.

Data communications traffic currently poses no significant threat to network integrity.

The Study concludes that the Public Switched Telephone Network (PSTN) is capable of accommodating the increasing volume of data communications, including Internet traffic, in the near term. The very few congestion problems that have been identified as affecting the telephone network can be easily corrected. Moreover, the study finds that, on average, Internet users do not impose disproportionate costs on local phone networks. Thus, any predictions that Internet traffic will soon result in a "meltdown" of the network are greatly exaggerated.

- The specific areas of congestion identified in the BOC studies are not representative of the nation's 23,686 central office switches, the vast majority of which do not carry much data communications traffic. In fact, the BOC studies focus only on a handful of central offices and switching entities (127) that serve ISPs. This study does not suggest that the specific problems that the BOC studies have identified should not be addressed, but that it is wrong to characterize these *ad hoc* problems as systemic.

- The few PSTN congestion problems that have been identified can be easily corrected. The specific congestion problems identified by the BOC studies are primarily attributable to inadequate planning and/or inefficient engineering, and in any event can be easily addressed and resolved by available service and equipment configurations with little difficulty or cost.

- Any congestion or other problems in the Internet itself, or in a particular ISP's network configuration, pose no cause for concern by the BOCs, since these problems do not significantly affect users of the PSTN.

- The BOCs' own recent efforts to enter the market as ISPs/ESPs undermine their argument that data traffic threatens the PSTN as a whole. If increases in on-line service traffic posed a significant threat to their networks, the BOCs would not be exacerbating the "problem" by offering unlimited Internet access for a flat rate.

The Internet produces net economic gains for local exchange carriers.

The growth of Internet and online service providers has generated significant new revenue streams for local exchange carriers. At the same time, because the heaviest Internet

traffic is at non-peak times for the PSTN, this traffic is actually lowering the local telephone companies' per-minute cost of providing service by utilizing capacity that would otherwise lie idle. The Study finds that the Bell companies did not consider these significant economic benefits when they claimed that their infrastructure investments for managing increased data communications traffic are uncompensated. The Study concludes that the recent increase in data communications traffic has generated revenues for local exchange carriers that exceed by a factor of six the incremental costs they incur to carry this traffic.

- Internet users already pay for the local phone services they receive. There is no "free ride" for ISPs/ESPs and their users under the present local rate treatment; local calls placed to ISPs/ESPs are paid for by the calling party and are revenue-producing to the BOC. BOCs receive substantial revenues from users through monthly charges for additional access lines and ISDN lines, and through usage-sensitive fees, as well as from the ISPs/ESPs themselves for the various basic and vertical services and features that they use. This study concludes that, nationally from 1990 through 1995, the local exchange carriers have collected more than $3.5-billion in revenues from additional residential access lines for subscribers who use them solely or primarily for calling ESPs/ISPs.

- In 1995 alone, some 6-million residential subscriber lines were used exclusively or primarily for online access. Total (nationwide) revenues from additional residential access lines whose installation was driven by the subscriber's use of on-line services reached $1.4-billion in that year.

- Compared with the Bellcore study estimate that reinforcing the PSTN will cost some $35-million per year per BOC (for a total of $245-million, nationally), additional residential access line sales stimulated by the growth of on-line services generated revenues that exceed this figure by a factor of six.

The Solution: More Data-Friendly Networks

The Study concludes that the growth of the Internet and other on-line services does not present any immediate congestion or revenue problem for the existing telephone networks. At the same time, it should also be clear that the existing PSTN presents formidable technical impediments to the future growth and development of these new services. Continued reliance upon circuit-switched technology is not a satisfactory solution to the needs of ISPs, ESPs and their customers. The long-term solution for accommodating increased data traffic lies in the stimulation of competition and in the deployment of appropriate data-friendly network technologies, and not in the imposition of access charges for use of the current voice-oriented circuit-switched PSTN.

Congestion internal to the Internet or to ESP Networks does not significantly impact the Public Switched Telephone Network

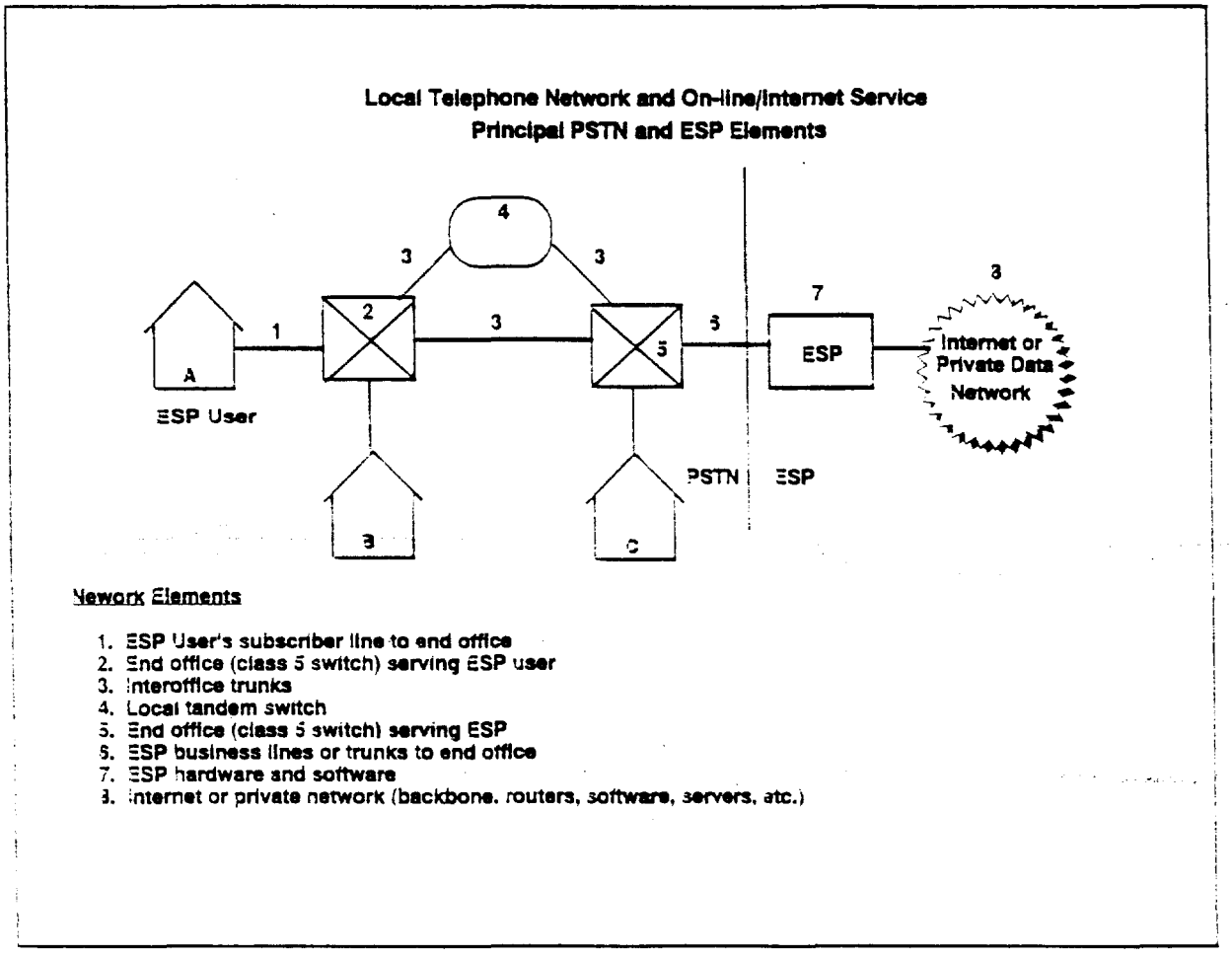

This diagram depicts a simplified version of the local telephone network. The public switched network itself consists of Elements *1* through *6*. In considering BOC claims, it is particularly important to bear in mind that any problems associated with lines to a particular ESP (Element *6*); a particular on-line service provider's internal hardware or software (Element *7*); or the Internet or other data network (Element *8*), have no significant impact upon users of the local telephone network.

1 INTRODUCTION

Recent studies issued by four of the Bell Operating Companies (BOCs) and by Bellcore[1] have sought to create the impression, both among industry professionals and the general public, that the explosive growth of the Internet and other on-line services threatens the integrity of the nation's public switched telephone network (PSTN) — and in particular that portion of the PSTN that is owned and managed by the incumbent local exchange carriers (ILECs). These studies purport to demonstrate that data traffic on the PSTN is tying up the ILECs' central office switches, leading to delays in delivering dial tone for other users of the network. The studies further imply that given the massive amount of data traffic they are being forced to handle, the BOCs can only prevent a collapse of the public network by undertaking costly new investments to reinforce and expand the existing, circuit-switched infrastructure,[2] for which, they allege, they will receive no compensatory revenues.

BOC rhetoric on this subject is exemplified by the recent statement by Philip J. Quigley, the Chairman and CEO of Pacific Telesis, who claimed in a speech this past October that the dramatic growth of on-line activity imposes large costs on Pacific Bell in terms of equipment and service, and even threatens a "meltdown in the [local telephone]

1. *See* "Report of Bell Atlantic on Internet Traffic" (Bell Atlantic study) June 28, 1996; "Pacific Bell ESP Impact Study" (Pacific Bell study), July 2, 1996; Letter from NYNEX to James Schlichting, Chief, Competitive Pricing Division, FCC, dated July 10, 1996 (NYNEX study); "U S West Communications ESP Network Study - Final Results" (U S West Study), October 1, 1996; and Amir Atai, Ph.D. and James Gordon, Ph.D., "Impacts of Internet Traffic on LEC Networks and Switching Systems" (Bellcore study), Red Bank, New Jersey, Bellcore, 1996.

2. In a "circuit-switched" network, an open "connection" is established between the calling and called party for the entire duration of the call, whether or not any information (voice or data) is being transmitted at any particular moment. The alternative to circuit-switched connections is "packet switching," in which no permanent link is established, but information is transported via discrete "packets" of data from its source to its destination. Whereas a circuit-switched architecture occupies resources for the duration of the connection, a "connectionless" packet-switched (e.g., Internet Protocol (IP) based) architecture occupies network resources *only when actual data is being sent*. Hence, while the duration (elapsed time) of a call is a major driver of the costs of a circuit-switched connection, for a packet-switched network the principal cost driver is *volume* of data, irrespective of how much time it takes for a particular quantity of data to be offered for transport over the network.

network."[3] The BOCs' proposed solution for funding the needed expansions and investments is to single out the on-line service providers themselves — Enhanced Service Providers (ESPs) and Internet Service Providers (ISPs)[4] — who use the PSTN to receive communications from their customers' homes and offices.[5] The BOCs argue that as the causers of the growth in data traffic, the ESPs/ISPs should be required to pay the same per-minute "access charge"[6] that the interexchange carriers (IXCs) are required to pay ILECs when they connect end users with their long distance telephone networks.[7]

On its face, the notion that the cost causers should pay for the costs they impose upon local telephone networks is hard to dispute. At issue, however, are the factual underpinnings of this proposition: That users of the Internet and other on-line services are somehow responsible for causing the Bell companies to incur costs *disproportionately higher* than other local telephone network users, and that Internet and on-line service users do not currently pay compensatory rates for the services and network demands that they impose upon the PSTN. As this study will demonstrate, neither of these claims made by the BOCs is valid.

Rather than present a comprehensive assessment of the costs imposed by, and revenues generated from, ISP/ESP use of the public network, the BOC studies address isolated, largely anecdotal and, in any event, unrepresentative situations that they seek to apply inferentially to the public switched network as a whole. The Bellcore study, in contrast, presents a theoretical analysis of the potential impact of increased traffic on the PSTN, as well as a discussion of technological alternatives to circuit-switching. However, it does not demonstrate that its hypothetical results, or the underlying assumptions, accurately reflect conditions in the ILEC networks. Because none of the studies offers a comprehensive

---

3. Quoted in "PacTel CEO Wants Higher Net Charges," *San Francisco Examiner*, October 4, 1996, at D1.

4. These terms, and others, are used to describe entities that offer on-line computer-based services to end users via telecommunications connectivity. For purposes of this report, the terms Enhanced Services Provider (ESP), Internet Service Provider (ISP), information service provider, and on-line service provider are used synonymously and interchangeably.

5. Currently, most low-volume Internet and on-line service users access their providers by means of ordinary analog voice-type calls placed over the local telephone network. The calls are received at a "modem bank" located at the ISP's premises, where the signals are converted to digital form, and are then packetized and/or multiplexed for transmission to the provider's data network and Internet gateway. From the perspective of the local telephone network, such calls are indistinguishable from ordinary voice telephone traffic.

6. *See, e.g.*, U S West study at 2; Bell Atlantic study at 17; and Pacific Telesis study cover letter.

7. The rules governing federally-tariffed access arrangements are set out in Part 69 of the FCC's Rules (47 CFR § 69). On-line services have been considered end users and thus are not required to obtain access using these arrangements. On-line service providers, like all other end users, obtain service using state-tariffed business lines. See *MTS and WATS Market Structure*, Memorandum Opinion and Order, 97 FCC 2d 682 (1983), at para. 83.

examination of the actual impact of Internet and other data communications use on the public network, they do not support the conclusion that Internet users impose disproportionate costs on the PSTN. Rather, ESP usage patterns, and any costs they impose on the network, are indistinguishable from those of a number of other PSTN applications. Moreover, because all of these studies ignore most of the revenue that Internet and other data communications currently generate for the ILECs, they lend no credence to the claims that such use represents an uncompensated financial drain on ILEC resources. As we demonstrate here, Internet and other data communications service providers do *not* impose costs on the PSTN that differ in any material respect from those imposed by many other large end users. Moreover, while Internet and other data communications providers are not subject to interstate access charge treatment, they currently pay, pursuant to *state* tariffs, rates that are fully compensatory for the services that they use. Finally, ESP customers provide a source of enormous revenues entirely overlooked by the BOCs in their studies.

This report will critically examine the position advanced by the various BOC and Bellcore studies, and offer a more objective perspective on the various concerns that have been raised. This Study's findings are summarized below:

- **Data communications traffic poses no significant threat to network integrity at the present time.** The BOC and Bellcore studies present a distorted picture of the actual impact of data communications traffic by limiting their examinations of the "problem" solely to certain central offices and switching entities that happen to serve ESPs, and even then by assuming (incorrectly) that ESPs in all cases are served in the least efficient manner, from a network engineering standpoint. In fact, data communications traffic, including Internet use by individual residential subscribers, is dissipated throughout the public network and does not constitute a significant proportion of traffic at the overwhelming majority of the nation's 23,686 central office switches. In addition, as the BOCs' own studies confirm, much of this traffic occurs during off-peak periods and thereby uses capacity that would otherwise lie idle.

- **The BOC studies overestimate the costs data traffic imposes on their networks, and overlook the fact that the increase in data communications traffic has produced additional revenues that far exceed the costs of accommodating that traffic.** This Study does not suggest that the specific problems identified in the BOC studies should not be addressed. However, it concludes that the severity of such problems has been overblown. The switch congestion problems that the studies have identified arise because *some* high-use ESP lines are routed through switch components that are designed to handle primarily low-use individual residential and small business access line customers. However, according to the Bell Atlantic study, for example, about half of all ESP lines in its territory are configured so as to bypass these switch components,

thereby eliminating dial tone contention and other switch congestion problems.[8] Many other types of high-use lines, such as PBX trunks, are routinely configured for similar "trunk side" connection to the central office switch, for the same reason. Moreover, the BOCs assert that data usage of the PSTN is uncompensated. As this Study will demonstrate, this is clearly untrue. The growth of Internet and other on-line services has stimulated considerable demand for additional residential and business access lines — services that the BOCs themselves are actively marketing, and which they concede are highly profitable. Indeed, this Study's conservative analysis of the revenues generated by additional residential lines used primarily for ESP access indicates that such revenues exceed even the BOC studies' own inflated estimate of the costs they incur from data traffic.

- **The long-term solution for accommodating increased data traffic lies in the stimulation of competition and the deployment of appropriate data-friendly network technologies. The imposition of per-minute "access charges" for the use of the current circuit-switched network is not the "solution" to any "problem" that may exist.** Rather than attempt to deal directly with the specific issues that their studies have identified, the BOCs offer instead as their solution the imposition of duration-based access charges at the ESP end of the data communications call. The BOCs hold that the imposition of a duration-based access charge will somehow relieve the traffic congestion problems at offices that serve ESPs. However, there is no way to ensure that revenues generated from a hypothetical access charge would be used to invest in a network that can accommodate data traffic. Moreover, BOC construction of and investment in such a network should not require access charges at all. In a competitive market, firms finance investments through debt or equity, based upon the anticipation of future revenues generated by new or improved services. Only in situations of monopoly could a firm generate investment funds through increases in prices for services presently offered. In fact, unless their effect is to literally put the ESPs out of business, the presence of access charges will do nothing to address the poor planning and inadequate engineering that are the actual sources of the limited congestion problems that exist. The BOC solution applies a punishment without a cure, and will serve only to stunt the growth of on-line services and enhance the competitiveness of the BOCs' own Internet service offerings at the expense of non-affiliated ISPs. The proper solution for accommodating data traffic is to encourage the development of competition at the local level, enabling new entrants to provide services designed to handle high-speed data traffic efficiently.

8. Bell Atlantic study at 15.

2 NETWORK AND SWITCH ARCHITECTURE

The modern local exchange telephone switching architecture can readily accommodate the limited cases of high-use ISP/ESP activity cited by the BOC studies.

In order to evaluate the actual nature and extent of problems that the BOCs claim to be caused by the usage of the PSTN for data traffic, it is necessary to understand the basic architecture of the modern local exchange switching system. In this section, we describe the switching infrastructure typical of local exchange networks, highlighting especially points of potential congestion in the various network components.

Figure 1 provides an overview of the local telephone network. ESPs and other end users access the public network via *subscriber lines* that connect their respective premises with the LEC central office that serves the subscriber's geographic area.[9] In most cases, there is only one "serving central office" associated with any given customer premises location.[10] The serving central office (also known as an "end office" or "Class 5 switch") is interconnected to the remainder of the local public network via *interoffice trunks* that directly link two end offices or that link an end office with an intermediate switching point known as a "local tandem switch." Generally, when a high volume of traffic between two end offices is present, direct end-office-to-end-office trunking is provided; for lower volume routes and for alternate routing when the high-volume direct trunks are in use, interoffice routing is provided via the tandem. Because large metropolitan areas are usually served by many individual end offices, a substantial fraction of all local calls will typically involve either a direct or a tandem-routed interoffice connection. If the calling and called parties

9. One or more central office switching entities are located in a building often described as a "wire center" because of its function as a point of concentration of subscriber lines from all parts of the geographic area that it serves, together with lines interconnecting the building with other LEC wire centers and with long distance (interexchange) carriers.

10. The incumbent local telephone companies employ a hierarchical architecture that in most cases provides only a single point of connectivity between a subscriber and the PSTN. Other local service providers, such as CAPs, often utilize a "ring" type of architecture in which individual customer premises are provided with at least two separate ways to reach the network.

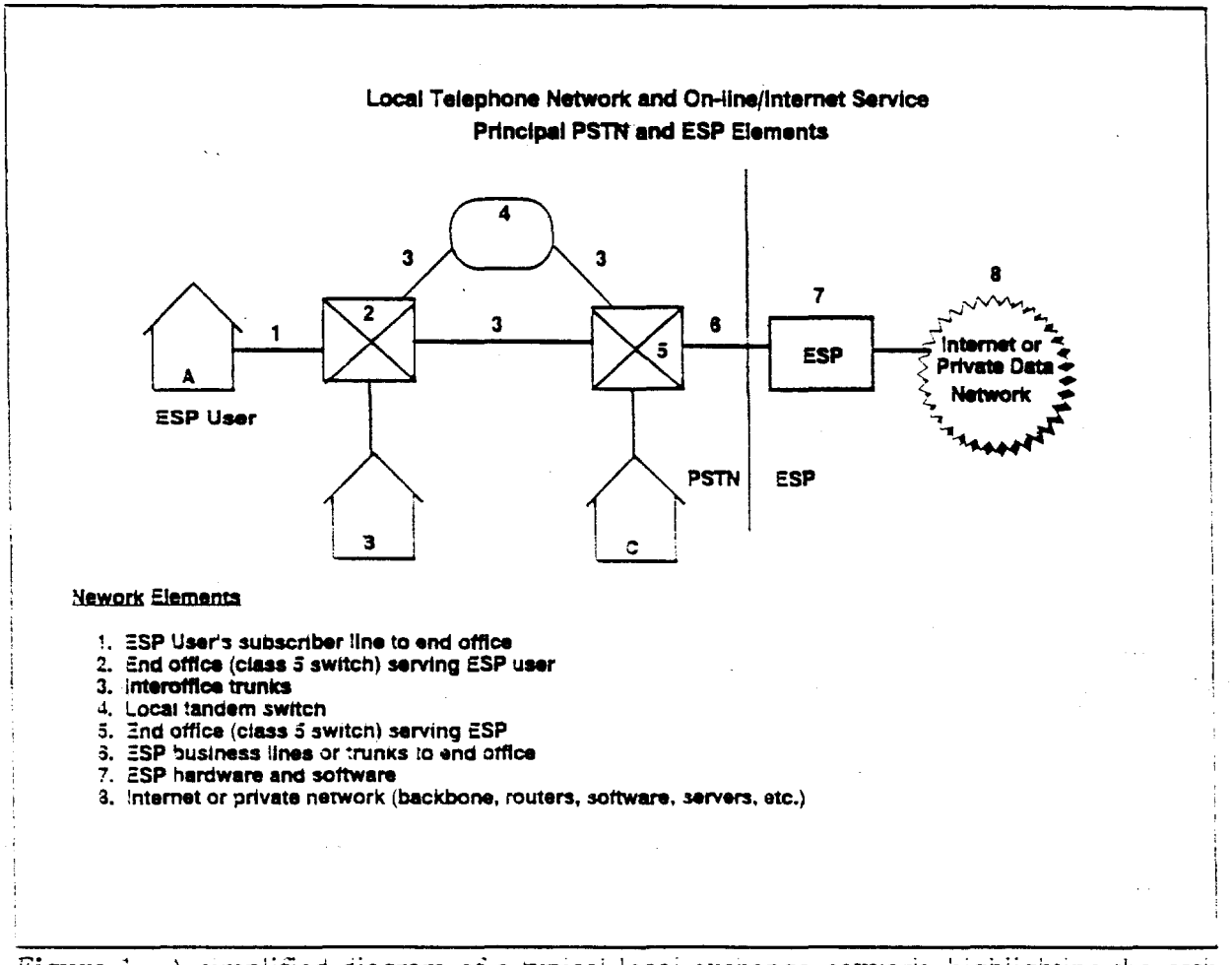

Figure 1. A simplified diagram of a typical local exchange network, highlighting the path of a call from an ESP user to the Internet or other on-line service.

happen both to be served by the same end office, the call can be completed on an *intra-office* basis, requiring fewer network resources than for an interoffice call.

Because an ESP/ISP using an analog connection is simply another end user, a call placed by an end user to the ESP via the current network infrastructure will be routed across the public network in an manner that is indistinguishable from any other local call. Since the ESP/ISP will typically subscribe for a block of individual lines configured in a so-called "hunt group"[11] served out of a single central office, traffic that originates anywhere

11. A hunt group concentrates calls from multiple customers onto a group of lines. In a line hunting arrangement, calls are dialed to a single "listed directory number" (LDN) or "base number," and will be physically routed by the terminating central office to the first available non-busy line in the group. This type of arrangement is quite common, and may be used whenever a customer has more than one exchange access line. Generally, the (continued...)

within the local network will tend to concentrate at the point of termination — the central office that serves the ESP/ISP.[12] Any congestion that may occur is therefore most likely to occur at that terminating central office.

Based on the simplified rendering of the local telephone network architecture presented in Figure 1, there are several specific points where blockage *might* occur between an end user and the Internet or other data network. The BOCs have referred to some or all of these as points of potential or actual blocking — that is, congestion created by the growth of data traffic. In considering potential data network blocking problems in the context of the PSTN, however, one must distinguish between congestion points that might affect other users of the PSTN from those that are specific to a single ESP/ISP or to the Internet, and that are unrelated to the local exchange network.

The originating switch of the ESP user, interoffice trunks, tandem switches, and the terminating switch of the ISP (the network elements labelled *2*, *3*, *4*, and *5* in the diagram) represent the PSTN. Congestion at any of those points might potentially affect the ability of other callers to get dial tone and make and receive telephone calls. Each of these will be examined in greater detail below. Usage of the distribution segment between the ESP customer and its serving central office (the element labelled *1* in Figure 1) has no impact on any user of the PSTN, except for the ESP customer. The element labelled *6*, that is, the link between the ESP and its serving end office is also distinct from other network elements in that congestion here will generally arise only where the ISP has failed to order a sufficient quantity of lines for the number of customers it has in a given locality. This type of congestion will not typically affect *other* users of the PSTN, unless they attempt to call the ESP.[13] Elements *7* and *8* involve hardware and software internal to the ISP and traffic

---

11. (...continued)
number of lines required for a particular customer will depend heavily upon the total volume of traffic that the entire group of lines is intended to carry. Such groups are typically engineered on the basis of the number of calls blocked per 100 attempts, sometimes referred to as the "grade of service" for the line or trunk configuration. Holding "grade of service" (e.g., the probability of 1 busy signal per 100 attempts ("P.01")) constant, the larger the group (number of lines), the higher will be the peak utilization per line in the group. For a discussion of the traffic engineering properties of line hunting groups, see R.F. Rey, Technical Editor, *Engineering and Operations in the Bell System*, Second Edition, Murray Hill, NJ, AT&T Bell Laboratories, 1983, Chapter 5, and Mischa Schwartz, *Telecommunication Networks*, Reading, MA, Addison-Wesley, 1987, Chapter 10.

12. The BOC/Bellcore ESP/ISP impact studies limited their examinations and measurement solely to the particular end offices that serve ESPs, thereby obtaining a "worst case" picture of the relative impact of ESP/ISP traffic. For other end offices that do not serve ESPs/ISPs (which were excluded from the BOC/Bellcore studies), the data portion of total traffic handled by the end office will in the vast majority of cases be *de minimis*.

13. This is particularly so where a common channel signalling architecture, such as Common Channel Signalling System 7 (SS7), is present, as it is in most (soon to be all) ILEC networks and end office switches. When a call is placed in an SS7 network, the status of the called number (i.e., busy or idle) is determined before the routing of the (continued...)

and infrastructure internal to the data network. *Any congestion at these points is clearly separate from the local exchange network, and any indirect costs that such congestion might impose on the PSTN are minimal or nonexistent.*

Blockage problems that *could* impact the PSTN can therefore occur at only three network points (Elements *2*, *3* and *5*). If sufficient numbers of ISP customers (represented by *A*) are served by a single end office switch (Element *2*), all paths through the switch could be blocked by their calls to the ISP, preventing any additional users (represented by *B*) from placing or receiving calls. In general, interoffice trunks (Element *3*) are provisioned in such a way that several paths exist between any two central offices (directly and via a tandem switch (Element *4*) in the example), and blocking problems should not occur. That is, any customer that can place a call at the originating switch will have an interoffice trunk available that can establish a route to the desired terminating switch of the call. However, it is conceivable that all paths between two central offices, or between a tandem switch and an end office, might be in use with no alternatives available in rare cases when interoffice trunks are underprovisioned or where a sudden or unanticipated increase in traffic volume occurs.[14] Finally, the switch that *terminates* calls to an ISP (Element *5*) might also be blocked by calls to the ISP. A sufficiently large number of calls passing through the switch and terminating on standard analog lines can cause blocking on the switch, preventing customers at *C* from placing and receiving calls.

---

13. ...continued)
call is set up. If it is determined that the called number is in use (e.g., because the ISP did not order a sufficient number of lines), the calling party receives a busy signal *generated by the originating end office*, and no use of interoffice network resources is required. Prior to the deployment of common channel signalling, the status of the called number could not be determined until the call itself had been set up. Thus, whereas in the past a customer's failure to provide adequate capacity could "back up" into the public network, this will not be the case in modern SS7-based infrastructures.

14. ILECs may, on occasion, encounter an unanticipated increase in interoffice usage over certain routes, either in the form of a short-lived spike or a permanent change in the overall volume of traffic. Neither of these conditions are unique to ISP/ESP services, and may arise with respect to any number of end user applications. As noted in footnote 13 *supra*, the ubiquitous presence of SS7 works to minimize the operational impact of temporary spikes, permitting calls that cannot be completed (due to trunk congestion) to be blocked at the originating switch. In cases of a permanent increase in traffic volumes, the additional revenues resulting from the increased usage as well as increased demand for additional residential access lines will typically be more than sufficient to defray the costs that the ILEC might incur in expanding interoffice capacity. Most local usage charges fall in the range of 2 to 3 cents per minute both for measured and flat-rate service, to the extent that flat-rate charges are set based upon average usage characteristics, whereas the proxy costs for local interoffice switching and transport, as identified in the FCC's *Interconnection Order I* in CC Docket 96-98, amount to between 0.4 and 1.05 cents per minute (consisting of a 0.2 to 0.4 cent local switching component at each end, plus a 0.15 cent tandem switching component (in the small fraction of cases where tandem switching is required), and less than 0.10 cents for local transport, where required). As these proxy costs were developed for average traffic conditions, the figures above will tend to overstate the actual costs of Internet calls, given that the majority of Internet usage takes place during off-peak, late evening hours. *See First Interconnection Order*, CC Docket 96-98, at para. 822, footnotes 1949 and 1959, and para. 824.

As will be discussed in sections 3 and 4 below, although PSTN congestion can *potentially* occur at each of these three points in the public network, the BOCs' studies cite examples of ISP-related congestion at only a single point on the network — the switch that terminates calls to the ISP (Element 5).

A closer examination of the components of a typical Class 5 switch helps clarify how the switch operates, and identifies the limited portions of the switch architecture in which blocking can occur.

Figures 2 and 3 present detailed diagrams of the principal components of a modern digital electronic central office switch. Low-use subscriber lines are terminated at "line ports" on the Line Concentration Module (LCM) which permits a relatively large number of individual lines to share a smaller group of paths through the switching matrix.

A central office switch typically serves about 20,000 subscriber lines, requiring up to 32 LCMs. Very large urban central office switches may contain as many as 156 LCMs.[15] In the Nortel DMS-100, up to 640 lines can be terminated in each LCM to share up to 180 paths. Put another way, a maximum of 180 out of the 640 lines can be in use at any point in time; the 181st subscriber will not receive dial tone until one of the other 180 subscribers has hung up, and calls placed to the 181st subscriber (when all 180 paths are in use) will receive a fast busy ("reorder") tone. In its standard configuration, the AT&T (now Lucent Technologies) 5ESS can accommodate up to a maximum of 512 subscriber lines sharing up to 64 ports, although with somewhat less flexibility than under the DMS-100 architecture.[16] These subscriber lines terminate at the Line Unit (LU) of the 5ESS switch, which performs a concentration function analogous to that of the LCM of the DMS-100.

If the usage characteristics of the lines terminating at a particular LCM are such that more than 180 would be off-hook during the peak period for the group, there are several engineering choices available to the local telephone company. The company can attempt to balance the traffic across the various LCMs in the switch by intermixing subscriber lines with *non-coincident peaking* characteristics. For example, by mixing business lines that make few calls during the evening with residential lines that make few calls during the day, a smaller number of lines in the LCM will be concurrently competing for the limited number of paths. Alternatively, the telephone company can reduce the number of lines that

15. While even larger central office facilities are technically feasible, the sheer size of the switching equipment required makes them impractical in nearly all situations.

16. AT&T, *5ESS Switch: The Premier Solution. Information Guide*. AT&T Network Systems, 1987, at 20.

it terminates on an individual LCM, such that up to half of the total lines in the LCM can be off-hook, rather than only about 1/4th of them in the fully loaded configuration.[17]

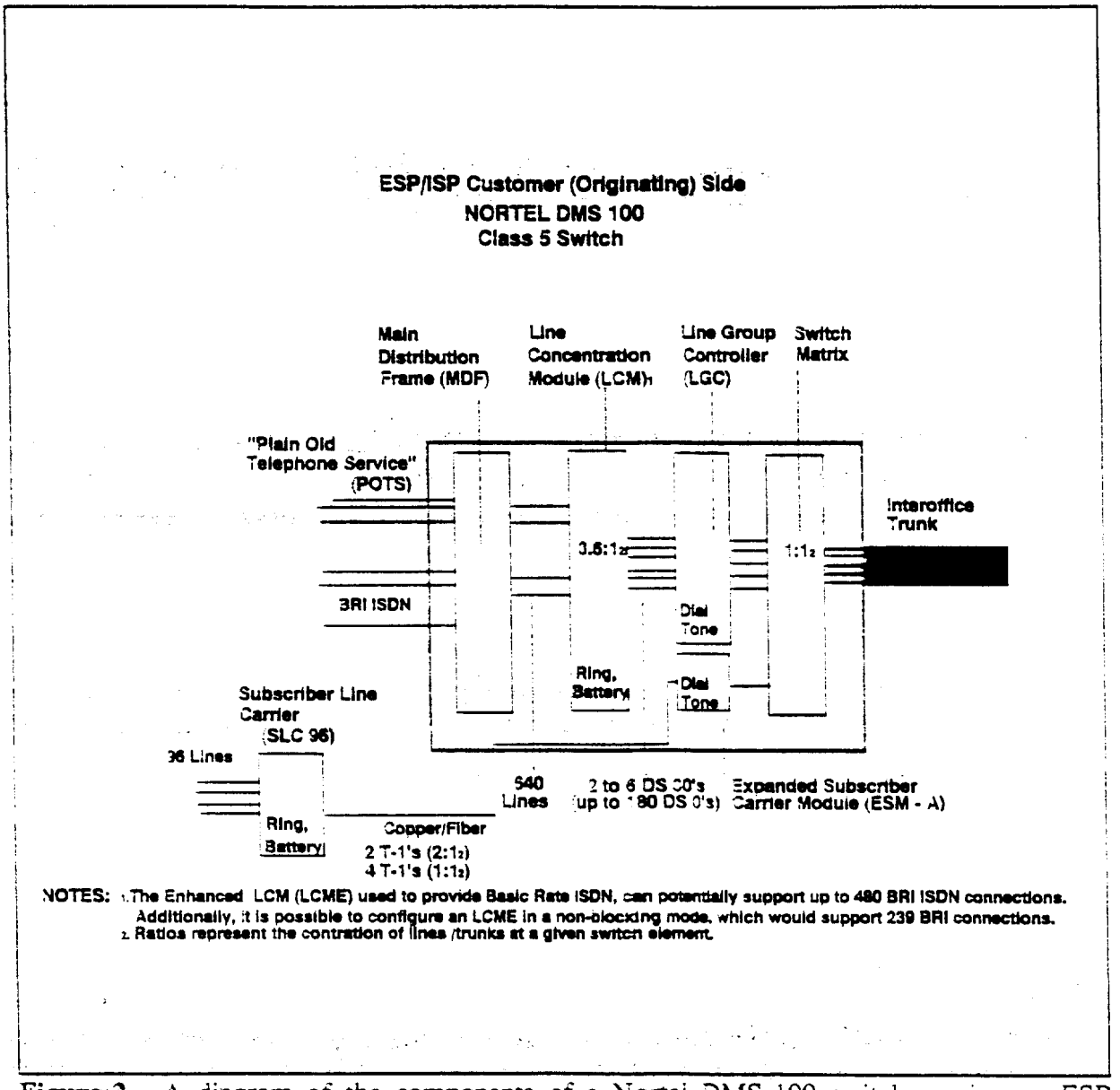

Figure 2. A diagram of the components of a Nortel DMS-100 switch serving an ESP customer (Element 2 of Figure 1).

17. Reducing the number of lines terminating at an LCM — or "deloading" the LCM — will result in some increase in the average cost per actual line termination, since the fixed cost of the LCM itself (a cabinet with associated wiring and power supply) will have to be spread across fewer lines. Thus, if the LCM is fully loaded, then its common equipment cost can be divided up among 640 subscriber lines; if only 320 lines are terminated, the per-line LCM common equipment cost will be doubled. Other costs that vary on a per-line basis, such as plug-in line termination cards, are not affected by the number of such cards that populate a particular LCM.

The cost of operating the PSTN and many of its components is sensitive to the *peak demand* placed on each network resource and to the relationship between that peak demand and the aggregate capacity of the individual network components. Off-peak use — and even significant growth thereof — does not materially impact network capacity or operating costs.[18] Moreover, certain network components are designed with substantially more capacity than is required even at peak periods, and are for most practical purposes *non-blocking* even at peak times. These include fiber optic interoffice cables and associated digital carrier systems and central office switching capacity. Because of the high fixed costs associated with their initial placement, fiber optic cables typically contain numerous individual "strands," only some of which are "lit" — i.e., equipped with electronics — when the cable is initially deployed. Additional traffic capacity can be readily augmented either by installing additional electronics on working ("lit") strands, or by equipping "dark" strands with electronic terminating gear. Switching systems similarly have high fixed processor costs, but the processor can typically handle substantially more traffic than is normally required by typical line/trunk configurations. "Non-blocking" switch elements are provisioned on a one-to-one basis, so the capacity of the switch is not constrained by their use. Thus, even when traffic loads increase to a point where additional peak-hour capacity must be provided, the incremental cost of this capacity will typically be far less than simply a proportionate expansion of the preexisting peak-hour capacity cost.[19] Non-blocking architectures are particularly common in modern digital central office switches, such as the Nortel DMS-100.[20]

---

18. One notable exception to this rule is the *transaction cost* associated with using measurement and call detail accounting for billing purposes, whose costs are generally sensitive to total calling volumes rather than to peak-load conditions. Numerous studies and regulatory decisions have found that the magnitude of such transaction costs exceeds the economic gains attributable to measured-use pricing of local calling — particularly where such use is heavily or primarily during off-peak periods — the case for most residential subscribers. *See*, for example, Rolla Edward Park and Bridger M. Mitchell, *Optimal Peak-Load Pricing for local Telephone Calls*, Santa Monica, California: The Rand Corporation, Publication number R-3404-1-RC, March, 1987; and William Taylor, *Generic Costing and Pricing Problems in the New Network: How Should Costs be Defined and Assessed?*, presented at the Twentieth Annual Williamsburg Conference, Institute of Public Utilities, Graduate School of Business Administration, Michigan State University, December 5-7, 1988, at pp. 10-11. *See, also*, Michigan PSC, *In the matter of the application of Michigan Bell Telephone Company for authority to revise its schedule of rates and charges*, Case No. U-7473, April 26, 1984; and Delaware PSC, *In the matter of the proposed amortization of the Diamond State Telephone Company's Straight-Line Depreciation Reserve...*, Order No. 3216, 120 P.U.R.4th 121, November 2, 1990.

19. That is, the incremental cost of increasing the busy-hour capacity of a switch by 10% from, say, 100,000 calls to 110,000 calls, will be well below 10% of the capital cost of the original (100,000-call) capacity.

20. Figures 2 and 3 present schematic diagrams of the components of a Nortel DMS-100 Switch. Figure 2 shows various methods by which residential lines terminate at the switch. As the figure makes clear, unless a subscriber is served by a Subscriber Line Carrier (SLC-96), analog subscriber lines and BRI ISDN lines both terminate in the Line Concentration Module (LCM), which connects all incoming lines (up to 640) with up to 180 outgoing trunks. As has been stated previously, the LCM is the switch component where blocking is most likely to occur.

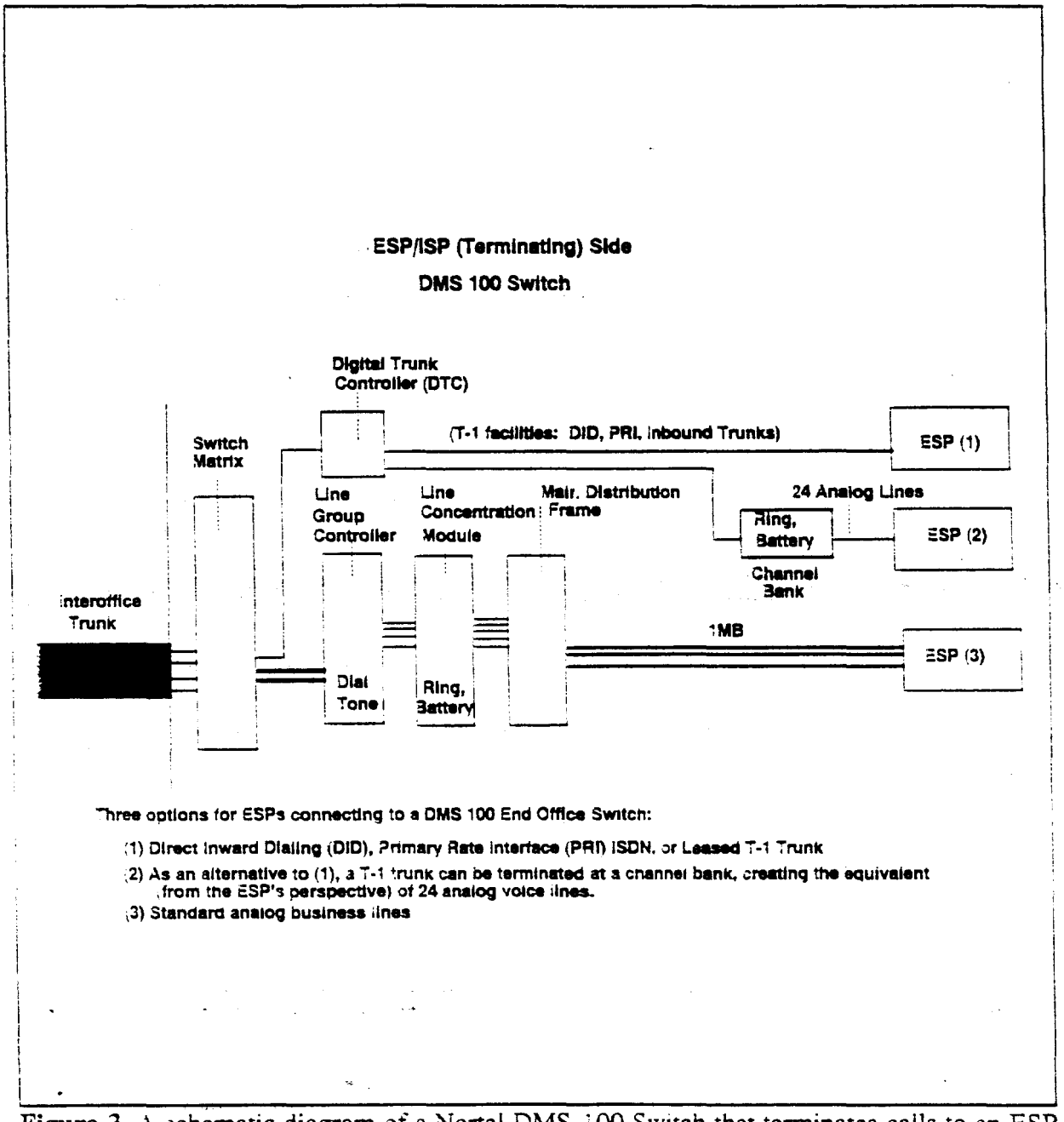

Figure 3. A schematic diagram of a Nortel DMS-100 Switch that terminates calls to an ESP (Element 5 of Figure 1), depicting three routes by which calls can be transported to the ESP.

ILEC tariffs often apply premium charges for, and thus deter use of, the most efficient service configuration for high-use subscriber lines.

The purpose of the Line Concentration Module, as its name implies, is to perform a *concentration* function. Ordinarily, it would not be economical to assign a dedicated switch path to each subscriber line, because on average an individual subscriber line is in use for only a small portion of the busy hour (that is, the hour in which the switch experiences its heaviest usage). However, in some cases individual lines may be used very heavily, perhaps for most of the full busy hour.[21] Lines that carry concentrations of traffic to and/or from a larger community of end users, such as PBX trunks and ISP/ESP access lines, can sometimes be more efficiently served by *bypassing* the Line Concentration Module and instead directly accessing a dedicated *trunk port* on the central office switch. Functionally, this is the same type of trunk port that is shared by the larger number of lines connected to the LCM (see Figure 3), but avoids the line contention and potential congestion at — as well as the plug-ins and common equipment costs of — the LCM itself. If the ISP access lines terminate directly in trunk ports, the "dial tone contention problem" is essentially eliminated, since the ISP's lines are no longer competing for the same limited group of switch paths with ordinary business and residential subscriber lines.

BOC tariffs, in fact, provide for such trunk terminations. LECs sometimes use T-1 lines to provide service to a customer who orders a large number of access lines, using a channel bank to convert the T-1 into the equivalent of 24 analog access lines, and charging as if it were offering 24 standard voice business lines. This approach, which is essentially transparent to the customer, is represented by Option 2 in Figure 3, and is generally used when the LEC concludes that installing 24 individual voice-grade (DS-0) lines would be less efficient than providing a single T-1.[22] However, if the subscriber desiring a T-1

---

21. The most common case in which this occurs is with private branch exchange (PBX) trunks. A PBX trunk is a subscriber line that connects the central office with switching equipment that is physically located at the customer's premises, to which a larger number of individual PBX extensions may be connected. Because the PBX trunks are used to concentrate traffic for a larger number of extensions, their average use is much greater than for ordinary business lines. This relationship has long been recognized in local telephone company tariffs — in jurisdictions in which businesses may subscribe for "flat-rate" service, PBX trunks are priced as much as 50% to 100% above the applicable rate for an ordinary (non-PBX) business access line to reflect the relatively greater volume, if not necessarily the relative cost, of calls originated on the trunk. Since the total number of PBX trunks that a customer will require is directly related to the customer's busy hour traffic load, the pricing of PBX trunks — even in flat-rate jurisdictions — is more accurately described as a "demand-sensitive" price, where the total charge to be paid by the customer is directly related to the concurrent peak demand (number of simultaneous calls) that customer imposes upon the PSTN.

22. Typically, 24 voice-grade or DS-0 lines will require the use of 24 individual subscriber loops, whereas a T-1 digital access line with a bandwidth of 1.544 mbps (equivalent to 24 – 64 kbps voice-grade digital channels) requires only *two* subscriber loops. The trade-off here is additional loops versus additional terminating equipment at the subscriber premises and the central office. Where distances are short and/or where loop pairs are plentiful,

(continued...)

trunk arrangement orders it directly, the ILEC's tariff often provides a very different rate structure. Generally, the subscriber orders a DS-1 (T-1) capacity (1.544 mbps) digital channel providing 24 DS-0 digital voice-grade 64 kbps channels, either over a fiber optic cable or via two copper pairs. The subscriber pays the applicable rate for a DS-1 local channel (typically $150 to $300 per month). In addition, the subscriber pays for each DS-0 termination on the central office switch, often at the prevailing PBX trunk rate, and in some cases may be subject to additional charges as well.

State (RBOC)	Measured Business Lines	Hunt Group Charge	24 Business Lines, in Hunt Group	Digital Trunk Group	PRI ISDN
New York (NYNEX)	$22.23	None	$533.52	$1502.45	$1,008.93
California (Pacific Telesis)	$16.32	$0.50	$403.68	$515.48 - $715.48	$524.90 - $724.90
Maryland (Bell Atlantic)	$19.34	$0.52	$476.64	$1212.16	$644.00
Oregon (U S West)	$24.00	$1.36	$608.64	$1134.00	$1,246.00

Table 1. Comparison of BCC tariffs for standard analog voice business lines, digital trunk groups, and PRI ISDN (the equivalent of 24 lines in each case). Sources: NYNEX New York State Intrastate Tariff, PSC 900 Sec. 4.E.36, PSC 900 Sec. 21.J, PSC 901 Sec. 2.C.1.b; PSC 901, Sec. C.1.b. Pacific Telesis California Intrastate Tariff, CAL PUC No. A5, Sec. 5.3.6, Sec. 5.3.C.4, Sec. 5.2.1; CAL PUC No. A18, Sec. 18.2. Bell Atlantic - Maryland, Inc., Maryland Intrastate Tariff, P.S.C. -Md. No. 203, Sec. 6.c, Sec. 14; No. 202, Sec. 2.C.2.a.(2); No. 203, Sec. 6.C. U S West Communications Oregon Intrastate Tariff, Sec. 15.1.D.1, Sec. 15.1.D.2, Sec. 5.2.1.D.1, Sec. 14.3; PUC Oregon No. 25, Sec. 5.2.5.A. 24 SLC charges are included for PRI ISDN, although this charge is not universally applied.

Table 1 summarizes the state tariffs for California, New York, Maryland, and Oregon (Pacific Bell, NYNEX, Bell Atlantic, and U S West, respectively), providing a comparison of measured business rates (including hunt-group charges) and the cost of a digital trunk

22. (...continued)
the individual line solution may be selected; for longer distances, and/or where pairs are scarce, the T-1 approach will be utilized.

group arrangement. The precise combination of tariffed services that is required to put together a digital trunk arrangement varies from state to state, and is not clearly defined in most state tariffs, making comparisons difficult. In New York, for example, the NYNEX tariff for its FlexPath Digital PBX service includes a charge of $533.06 for 24 ports, a Digital Termination Facility (DTF) charge of $435.87, a charge for 24 measured PBX trunks at $389.52, and a charge of $144 representing 24 Subscriber Line Charges ($6.00 each), for a combined total of $1,502.45, or $62.60 per voice-grade trunk.[23] Similarly, in California, Pacific Bell's tariffs would apply a high capacity (T-1) private line charge of between $150 and $350, a "Super-Trunk" termination charge of $211.48, a $10 trunk port charge, and a $144 subscriber line charge (24 lines at $6.00 each), for a combined total of between $515.48 and $715.48.[24] In all four states, however, the price comparison leads to the same conclusion: A hunt group of 24 analog voice lines is priced between 22% and 65% less than the equivalent trunk-side connection. The economic rationale for this price differential is difficult to understand.[25] While the cost of a trunk group does include the cost of the software and hardware that connects it to its serving end office switch, the price of a standard business line presumably covers analogous costs. Moreover, the price of a business line must also include significantly more in terms of distribution plant than a trunk group.

23. See Table 1, *supra*, for sources.

24. See Table 1, *supra*, for sources.

25. In fact, the FCC has recently taken note of the fact that the costs associated with T-1 PRI (Primary Rate Interface) ISDN service (which consists of 24 voice-grade "B" channels) is less than 24 times the cost of a single analog subscriber line. *See, Access Charge NPRM*, CC Docket 96-262, released December 24, 1996, at para. 70. The following cost data were provided, with average ratios computed with and without NYNEX, which the Commission suggested may be an outlier:

Ratio of Costs of Standard Analog Service to PRI ISDN Service*

	Outside Plant (loop only) costs	**Outside Plant (loop only) costs (excluding NYNEX)**	**All NTS costs**	**All NTS costs (excluding NYNEX data)**
Ameritech	1:5.68	1:5.68	1:8.9	1:8.9
Bell Atlantic	1:4.13	1:4.13	1:15.80	1:15.80
NYNEX	1:10.94	excluded	1:27.74	excluded
Pacific Bell	1:4.67	1:4.67	1:8.70	1:8.70
US West	1:5.33	1:5.33	1:10.60	1:10.60
Average ratio of costs	**1:6.5***	**1:4.95***	**1:15.13***	**1:10.5***

*Averages may differ due to rounding.