NCTA

National Cable Television Association

1724 Massachusetts Avenue, Northwest
Washington, DC 20036-1969
(202) 775-3550

EX PARTE OR LATE

DOCKET FILE COPY ORIGINAL

CEMA

Consumer Electronics Manufacturers Association
A Sector of Electronic Industries Association

2500 Wilson Boulevard
Arlington, VA 22201-3834 USA
(703) 907-7600

By Hand

RECEIVED

MAR 1 1 1997

Federal Communications Commission
Office of Secretary

William F. Caton
Acting Secretary
Federal Communications Commission
1919 M Street N.W.
Washington, DC 20554

EX PARTE OR LATE FILED

March 10, 1997

Re: Notice of Written Ex Parte Presentation, ET Docket 93-7, Implementation of Section 17 of the Cable Television Consumer Protection and Competition Act of 1992--Compatibility Between Cable Systems and Consumer Electronics Equipment

Dear Mr. Caton:

In accordance with Section 1.1206(a) of the Commission's rules, please find three copies of the enclosed ex-parte presentation for inclusion in the public record of the above-referenced docket.

Sincerely,

George Hanover
Vice President, Engineering
Consumer Electronics
Manufacturers Association

Wendell Bailey
Vice President, Science and Technology
National Cable
Television Association

cc: Bruce Franca, Office of Engineering and Technology
Allan Stillwell, Office of Engineering and Technology

William Johnson, Cable Services Bureau
Ron Parver, Cable Services Bureau
John Wong, Cable Services Bureau

No. of Copies rec'd 4 orig.
List ABCDE

SUMMARY OF FINAL AGREEMENT ON CABLE READY TELEVISION RECEIVERS BY THE CABLE-CONSUMER ELECTRONICS COMPATIBILITY ADVISORY GROUP (C^3AG)

INTRODUCTION

Over the past decade the consumer electronics industry has added a number of features to television reception devices (e.g., TV receivers, VCRs, etc.; "receivers") which serve to enhance the viewer's ability to select programming (*e.g.*, picture in picture, enhanced remote control functions, favorite channel, and alternate channel). At the same time, the cable television industry has expanded services to provide the viewer with more programming choices (*e.g.*, expanded basic offerings, premium channels, and pay per view [PPV]) and user interfaces to facilitate the selection and consumption of this programming.

Scrambling has become by far the most common approach cable operators use to protect against unauthorized access to premium, and PPV channels. Descramblers, supplied in set top terminals by the cable operator, will, when tuned to a scrambled channel, intercept all the cable signals before they enter the receiver and send only the desired descrambled signal on to the receiver. Because the receiver selection features described above require the entire spectrum of authorized channels to be available to the receiver, a basic incompatibility evolved between cable systems' methods to ensure the secure delivery of programming and the viewer-friendly functions of receivers.

This incompatibility is not caused by the enhanced receiver features or by the expanded cable services but by the lack of an adequate descrambler interface between the cable service and the television receiver.

Against this background, Congress wrote the cable-consumer electronics compatibility provisions of the 1992 Cable Act.

THE 1992 CABLE ACT

Section 17 of the Cable Act (47 U.S.C. 544a, or Section 624A of the Communications Act) required, among other things, that consumers have full benefit of the features of their receivers including the ability to record one channel while watching another, to record sequential programs which are not on the same channel, and to use advanced display features such as picture in picture. All these requirements depend on the availability of the desired channels to the receiver. Section 17 also required the FCC to specify the technical requirements of cable compatible or cable ready receivers. In 1996, Congress amended these provisions to clarify that their implementation was not to affect functions and features other than those for which compatibility was sought.

The 1992 Act also required the FCC to make such rules as necessary to carry out Section 17 and called on the FCC to work with the consumer electronics and cable industries for this purpose. The FCC, in turn, contacted the National Cable Television Association (NCTA) and the Consumer Electronics Group of the Electronic Industries Association (now the Consumer Electronics Manufacturers Association [CEMA], a sector of EIA) to help form an advisory group of representatives of the two industries. This group, the C^3AG, met for the first time in January of 1993.

To support them in their advisory role, the C^3AG asked the CEMA/NCTA Joint Engineering Committee (JEC), a then ten-year-old standing committee of the two industries, to provide technical advice to the C^3AG.

FCC ACTIVITIES

One of the most significant FCC actions to affect C^3AG deliberations was the inclusion of paragraph 42 of the Commission's First Report and Order in ET Docket 93-7. In that paragraph, the Commission urged the C^3AG to include input from other affected video delivery systems and required that the signal access control functions be separated from other functions. To accomodate these extensions, C^3AG's has provided a bus structure and a command language to operate through the interface originally proposed by the C^3AG for descrambling compatibility. This solution is incorporated in the mid and long term solutions described below.

C^3AG SOLUTION

The C^3AG proposes a three-phase solution to the problem: short-, mid-, and long-term.

Short-Term

A short-term solution is necessary since major alterations in the inventory of already-installed receiving equipment and cable plant are considered impractical and economically infeasible. The short-term solution concentrates on defining enhancements to set-top terminals to allow bypass of the signal spectrum when possible, and to emulate and/or avoid inhibiting the features of receivers.

Mid-Term

The mid-term solution is the primary subject of this filing.

The C^3AG recognizes that the basic purpose of Section 17 of the 1992 Cable Act and the FCC's rulemaking is to preserve the ability of a consumer to record while watching, record sequentially, and use picture in picture as well as to protect against unauthorized viewing. In the C^3AG's view, these requirements, along with the separation of functions specified

in paragraph 42, form a good basis upon which to define a consumer-friendly, commercially feasible cable ready receiver. In addition, the C^3AG recognizes the need to accommodate new technologies and other media as noted in paragraph 42. The C^3AG therefore proposes a two level approach to the definition of cable ready receivers.

Level one (Cable Ready) encompasses a group of standards that address the three functional requirements of Section 624A(c)(1)(B) of the Cable Act. Level two (Advanced Cable/Media Ready) expands upon this group of standards to accommodate other media and more functions including expanded remote control (RC) system functions.

Cable Ready

The technical description of Cable Ready receivers is contained in three standards being developed under the C^3AG. The first standard, the Cable Television Channel Identification Plan, (EIA/ANSI- 542 [former EIA/IS-132]) defines the default channel number versus frequency allocation to be used by receivers and cable systems. This standard has been submitted to ANSI for final release.

The second standard, RF Interface Specification for Television Receiving Devices and Cable Television Systems (EIA/IS-23), defines the interdependent interface parameters between the cable radio frequency (RF) signals and the receiver RF input. Since the five main RF input performance parameters (direct pick up, tuner overload, oscillator leakage, and image and adjacent channel rejection) were, in large part, adopted by the Commission and well defined in the Commission's rulemaking, the standard will detail the measurement procedure for these five parameters as well as define appropriate cable signal requirements. This standard is currently in the redrafting stage.

The third standard, Decoder Interface Standard (EIA/IS-105), consists of two parts, IS-105.1(draft attached) and IS-105.2, and defines the interface between receivers and decoders. Decoders are devices designed to connect to the decoder interface. Descramblers are decoders designed to make possible access to, and the secure delivery of, cable systems' services. Equipment designers may also devise other types of decoders which use the interface to provide additional features.

Part one (IS-105.1) sets forth the hardware and basic electrical characteristics of the decoder interface. It includes the description of the physical plugs, the functions of the 26 pins, the voltages and impedances, the coding technique and the bus protocol as well as the IF/AGC interface. The second part (IS-105.2) specifies the commands needed to flow between the receiver and the decoder(s) to carry out the requirements of Section 624A.

The connector and bus physical layer formats were derived from the CEMA IS-60 CEBus© standard now going through ANSI processing. The bus protocol and formal command set are important for the accomplishment of the extensibility and flexibility goals set forth in the

FCC rulemaking, to accommodate multiple decoders. Their standardization is also consistent with Section 624A(c)(2)(D), in that other functions and features are not necessarily altered or materially influenced by such standardization. Moreover, these standards elements are consistent with Section 629 of the Communications Act because they will facilitate the required transition to commercial availability of multi-channel video programming navigation devices. Several other protocols (*e.g.*, I squared C) were evaluated, but the CEBus standard was determined to provide a non-proprietary, technically viable approach for the bus requirement which offers a peer-to-peer protocol, distributed intelligence, and the capability to do the job. The CEBus standard command format creates a platform from which the rich set of commands needed by the Advanced Cable/Media Ready (level 2) may be developed. So, for example, telephone company-provided video, direct-to-home satellite broadcast, and other services may be supported, without being forced to predefine command sets for these additional functions and features.

Extensive computer simulations are being conducted by the JEC to assure that the basic requirements of Section 624A will be achieved by the Decoder Interface. Since the cable industry is adopting digital signalling while maintaining its use of analog signalling, simultaneous support of decoders for each mode is important. Therefore, in addition to simpler configurations, the simulation also incorporates the case in which an analog and a digital descrambler are shared between a television set and a VCR.

C^3AG believes that adoption of IS-105.1 as an industry and FCC standard is supported unanimously by the cable and consumer electronics companies represented on the Advisory Group. As to the IS-105.2 standard, there is consensus that, subject to verification testing, this standard comports with the compatibility requirements of Section 17 of the 1992 Cable Act. C^3AG recognizes that there is disagreement from several parties that have participated in ET Docket No. 93-7, as reflected in a May 1996 Joint Petition for Further Reconsideration, whether IS-105.2 is consistent with the restrictions imposed in the Telecommunications Act of 1996, as set forth in 47 U.S.C. § 624A(A)(a)(1), (c)(1)(a), and (c)(2)(D). While a substantial majority of the C^3AG believes that the standard is consistent with all parts of Section 624A, this Agreement takes no view on that determination and leaves the question for the FCC to determine as a technical and legal matter.

Advanced Cable/Media Ready

The three compatibility requirements set forth in the 1992 Cable Act (*i.e.*, record-while-watching, sequential recording, and picture-in-picture) that apply to Cable Ready receivers also apply to the Advanced Cable/Media Ready receivers. An additional part of the Decoder Interface Standard (EIA/IS-105.3) supports remote control pass-through so that other protocols and commands sets can utilize the television sets remote control receiver and decoder interface. An extra connector provides the output of the receiver's remote control system to the decoders.

Advanced Cable/Media Ready receivers are also specified to incorporate bi-directional audio and video buses. This capability permits the receiver to source as well as accept A/V signals, allowing the receiver to manage and contribute to the signal. For example, text over video can be facilitated with this capability. A signal from a receiver may be directed to a decoder which adds text over the video before sending the combined signal back to the receiver.

Finally, the Advanced Cable/Media Ready receiver has an extended command set to facilitate other media and home theater requirements (e.g., DBS, C-band, electronic program guide, DVD). An additional standard, EIA/IS-105.4, will define the minimum set of commands needed to do this job.

While the Cable Ready requirements are an important step forward, the C^3AG will not consider its work on the mid term solution completed until the Advanced Cable/Media Ready standards are finished and both have been thoroughly field tested. Together, they form the solution to the mid-term compatibility problem.

Long-Term

The long term solution is concerned with compatibility of digital cable signals and digital television receivers. This work is under development within the C^3AG, the JEC, and a new standards committee of the Society of Cable Telecommunications Engineers (SCTE).

The C^3AG and JEC are developing new interface standards that extend much of the work done for the analog interface.

The SCTE is developing standards for the digital television cable signal itself, without which design of cable ready receivers may not be possible, since consumer electronics manufacturers need a degree of certainty offered by a standard to justify the large capital investment needed to produce equipment for a large market.

CONCLUSION

Considerable progress has been made on cable-consumer electronics compatibility. The C^3AG trusts that the FCC supports and encourages the above-mentioned work.

DRAFT
by the
DECODER INTERFACE SUBCOMMITTEE
in conjunction with
WORKING PARTY 9 - DRAFTING

Decoder Interface Standard
DRAFT IS-105.1

EIA/NCTA Joint Engineering Committee

Revision: 6.21
Date: December 18, 1996

Revision 4.2 incorporates changes approved at the August 8, 1994 meeting of the JEC Executive Committee. Revision 4.3 contains one minor change from JEC on Table 1. Revision 4.4 updates resistor values on Figure 13 and currents in the preceding table. Revision 4.5 removes some text from section 5.5.4 as an agreement of the Decoder Interface Subcommittee co-chairmen before submission to the FCC. Revision 4.6 adds a section to deal with allocation of A/V lines depending upon signal type. Revision 4.7 includes editorial changes from the committee review on October 11, 1994. Revision 4.8 includes editorial changes from the committee review on November 29, 1994. Revision 4.9 deletes protocol sections that were moved to IS-105.2 and adds a few corrections. Revision 5.0 adds section 4.5.1.1 on IF response. Revision 5.1 includes minor corrections from March '95 meeting and corrections to control line values. Revision 5.2 accepts noise figure of 4.5.1.1 and makes minor corrections to Control Line parameters. Revision 5.3 has minor detailed corrections and fills in all TBD items the editor could find. Revision 5.4 incorporates changes agreed to at the July 19, 1995 meeting in preparation for ballot to the Decoder Interface Subcommittee. Revision 5.5 includes edits made by Resolution Task Force 1 after the August 1995 ballot. Revision 5.6 includes further edits made by Resolution Task Force 1 after the October 1995 meeting. Revision 5.7 incorporates changes agreed to at the November 29, 1995 meeting in Anaheim, California (covering pages 1-12 only) and changes from the January 16, 1996 meeting at EIA. Revision 6.0 includes changes from the February 27, 1996 meeting and is the version voted on by the committee to go to ballot after RTF1 approval. Version 6.1 incorporates only the changes proposed by the RTF1, based on returned ballots. Revision 6.1a and b are unofficial work in progress by the editing committee, which will become revision 6.2 when ready for committee study. On 12/15/96 the document file name was changed from WP31-62.doc to 105r1a.doc, and the earlier revisions were accepted, to simplify future editing. The WP31-

62.doc is on file for those wishing to trace the revisions. 105r1a.doc is a general revision for submission to the CCCAG, for transmittal to the FCC as a work in progress. Revision 6.2 is submitted to the FCC as an example of the work that has been accomplished.

Rev. 6.21 is similar to 6.2 with some minor clean-up in verbiage, and fixing some printing problems that existed in 6.2. It is presented to the committee in January 1997.

TABLE OF CONTENTS

1. SCOPE 1
    1.1 Referenced Documents: 1
    1.2 Definition of Terms 2
2. INTRODUCTION 2
3. IF AND AGC CONNECTION 4
    3.1 Architecture 4
    3.2 Interface Issues 5
    3.3 Expander 6
    3.4 IF Switch Option (Transfer Switch) 7
4. TABLES OF REQUIREMENTS 8
    4.1 IF Characteristics 8
        4.1.1 Applying to the Consumer Electronics device 8
        4.1.2 Applying to the Set-Back Decoder 9
    4.2 Tabulated AGC Requirements 10
        4.2.1 Open Loop Decoder Behavior 12
        4.2.2 Return Loss 13
        4.2.3 Cable Length 13
        4.2.4 Decoder AGC Driver Output Resistance 13
        4.2.5 Value of Receiver Delayed AGC Source Impedance 13
        4.2.6 Delayed AGC Time Constant 13
        4.2.7 Delayed AGC Voltage Range 13
5. A/V/CONTROL 13
    5.1 General Specification 13
    5.2 Mechanical Specifications 14
        5.2.1 Cable Construction 14
        5.2.2 Signal Assignments 14
    5.3 Electrical Specifications 15
        5.3.1 Cable Assembly Electrical Characteristics 15
        5.3.2 Termination 16
    5.4 Connectors 17
    5.5 Audio Lines 17
    5.6 Video Lines 18
    5.7 Audio/Video Line Usage 20
        5.7.1 Requirements Applying to Receiver 20
        5.7.2 Requirements Applying to Decoder 20
    5.8 Common Mode Reference 21
    5.9 Control Line 21
        5.9.1 Electrical and Encoding 21
        5.9.2 Driver Output Specifications 23
        5.9.3 Receiver Input Specifications 24
6. CHARACTERISTICS OF TRANSFER SWITCH 26
7. APPENDICES 26
    7.1 A: Triple Beat Measurement 26
    7.2 B: Watch and Record Scenarios 27
        7.2.1 B1: Cable Ready TV and VCR with One Decoder Connected to TV 27

7.2.2 B2: Cable Ready TV and VCR with One Decoder Connected to VCR 27
7.2.3 B3: Cable Ready TV and VCR with Two Decoders 28
7.2.4 B4: Cable Ready TV and VCR with One Shared Decoder 29
7.2.5 B5: Cable Ready TV and VCR with Two Shared Decoders 30
7.3 C: Loop Dynamics 30
7.4 D: Power Connector for Expander 33
7.4.1 D1. Expander Connector 33
7.4.2 D2. Decoder Connector 34
7.4.3 D3. Male Cable Connector 35

Table Of Figures

Figure 1. Receiver/Decoder Block Diagram Operation 3
Figure 2. General Decoder Interface Operation with Multiple Decoders 3
Figure 3. Partial Diagram of Decoder Interface, IF/AGC Connection 4
Figure 4. Expander IF Connection 6
Figure 5. Transfer Switch to Allow Two Receivers to Share Two Decoders 7
Figure 6. Open Loop Decoder Behavior 12
Figure 7. A/V/Control Connector Usage 14
Figure 8. Contact and Signal Assignments for A/V/Control Cable Assemblies 15
Figure 9. Audio Driver Test Circuit 18
Figure 10. Video Driver Test Circuit 19
Figure 11. Common Mode Reference Connection 21
Figure 12. Symbol Encoding and Electrical Characteristics 22
Figure 13. Example Control Line Transceiver 25
Figure 14. Triple Beat Measurement 26
Figure 15. Cable Ready TV and VCR with One Decoder Connected to TV 27
Figure 16. Cable Ready TV and VCR with One Decoder Connected to VCR 27
Figure 17. Cable Ready TV and VCR with Two Decoders 28
Figure 18. Cable Ready TV and VCR with One Shared Decoder 29
Figure 19. Cable Ready TV and VCR with Two Shared Decoders 30
Figure 20. Delayed AGC Curve 31
Figure 21. Nominal System Operating Levels 32
Figure 22. Connector for Use on Expander When a Manufacturer Chooses to Supply Power from the Expander to Decoders 33
Figure 23. Connector for Use on Decoders Which Can Accept Power from the Expander 34
Figure 24. Suggested Connector for Use With Expander Power Cable 35

1. SCOPE

This standard specifies an interconnection method for attaching a cable Decoder (set back box) to a piece of consumer electronics equipment, such as a TV or VCR. Covered under this standard are two ports. An audio/video/control port is always required. An IF port is always required on the Receiver and may be required on the Decoder, depending on the application. The scope of this document extends to electrical and mechanical characteristics, and, for the control component of the interface, protocol and command set requirements. This standard specifies the physical characteristics of the interface between the Decoder and the Receiver. It is incomplete without IS105.2, which specifies the control interface between the two devices.

The two documents IS105.1 and IS105.2, describe a basic or so-called "level 1" decoder. It is intended that a level 1 device will provide for interface between more than one Receiver and more than one Decoder, but will not offer the full functionality of the AVBus interface. As described in IS105.2, the Decoder may exchange commands with the Receiver using a rich command language set. However, the Decoder is not able to receive native remote control signals directly from the Receiver. It is anticipated that documents presently assigned the numbers IS105.3 and IS105.4 will describe a super set of IS105.1 and -.2 functionality, to include full AVBus functionality and remote control pass-through.

1.1 Referenced Documents:

SCTE IPS-SP-400 "Recommended F Port (Female) Specification"

C.F.R. 47, part 76 "Cable Television service," FCC Rules (The Rules as of October 1995 were consulted during preparation of this document. Generally, devices manufactured under this voluntary Specification will have to comply with the Rules as they existed on the date of manufacture.)

C.F.R. 47 part 15 "Radio Frequency Devices," FCC Rules (The Rules as of October 1995 were consulted during preparation of this document. Generally, devices manufactured under this voluntary Specification will have to comply with the Rules as they existed on the date of manufacture.)

EIA IS-105.2 "Decoder Interface Standard, part 2"

EIA IS-23 "RF Interface Specification for Television Receiving Devices and Cable Television Systems," June 20, 1994

EIA IS-60 "Home Automation Systems," October 1992

EIA-542 "Cable Television Channel Identification Plan," April 23, 1996

EIA-693 "Audio/Video Bus (AVBus) Physical Layer and Media Specification"

EIA-700 AOAD "1.27 mm Pitch, Ribbon Contact (Leaf Spring), Trapezoidal Shaped, Self Locking I/O Connector"

1.2 Definition of Terms

Explanation of a few terms is in order to make presentation of this standard clearer.

The Decoder Interface is the combination of IF/AGC, digital control, and baseband Audio/Video lines necessary to interconnect cable-ready devices and Decoders.

The Decoder is the product that is external to the cable ready device and is connected via the Decoder Interface. It may provide descrambling and/or features. Two classes of Decoders are discussed in this standard.

A Descrambler is a Decoder that has the ability to control access to scrambled or encrypted program services.

A Feature Unit is a Decoder that provides services or features exclusive of conditional access.

The Receiver is the cable ready device to which a Decoder may be connected. Although Receiver implies television, a VCR or other cable ready device may have a Decoder connected to it.

An Expander is used when two or more Decoders need to access the IF signal from the TV.

These definitions are not intended to limit the implementation of any particular Decoder.

2. INTRODUCTION

A simplified representation of the Decoder Interface is illustrated in Figure 1. Flow of video/audio information is indicated by filled arrowheads. Cable input is in the upper right hand corner. The signal may loop through the Decoder (dashed line) to allow communications between the decoder and the headend. The full cable bandwidth is delivered to the Receiver at the top. For service not requiring the Decoder, video may pass directly from tuner to signal processor. In order to descramble a signal, the tuner (at least the main tuner of a multi-tuner receiver) delivers an unfiltered 6 MHz channel at the intermediate frequency, on the IF/AGC line. The Decoder performs descrambling and returns video and, optionally, audio, at baseband, through the A/V/Control bus. An open arrowhead points from Decoder to Receiver on the IF/AGC line. This arrow represents the ability of the Decoder to take over tuner AGC from the Receiver, when necessary.

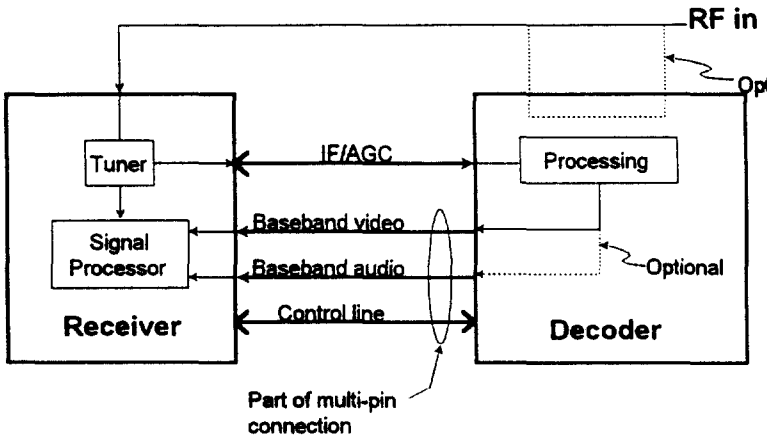

Figure 1. Receiver/Decoder Block Diagram Operation

The Decoder Interface supports more than one Decoder connected to the Receiver. Figure 2 illustrates the general case of a Receiver with Decoders attached. If more than one Decoder requires access to the IF signal, an Expander is used to facilitate connection without excessive corruption of the frequency response of that bus. The Expander consists of an amplifier and splitters to provide IF output on more than one port, with the RF AGC being passed back through the Expander to the Receiver. The A/V/Control is also a bus which can support up to ten devices. Coordination of the Decoder(s) with the Receiver(s) is performed by exchanging messages on the control line.

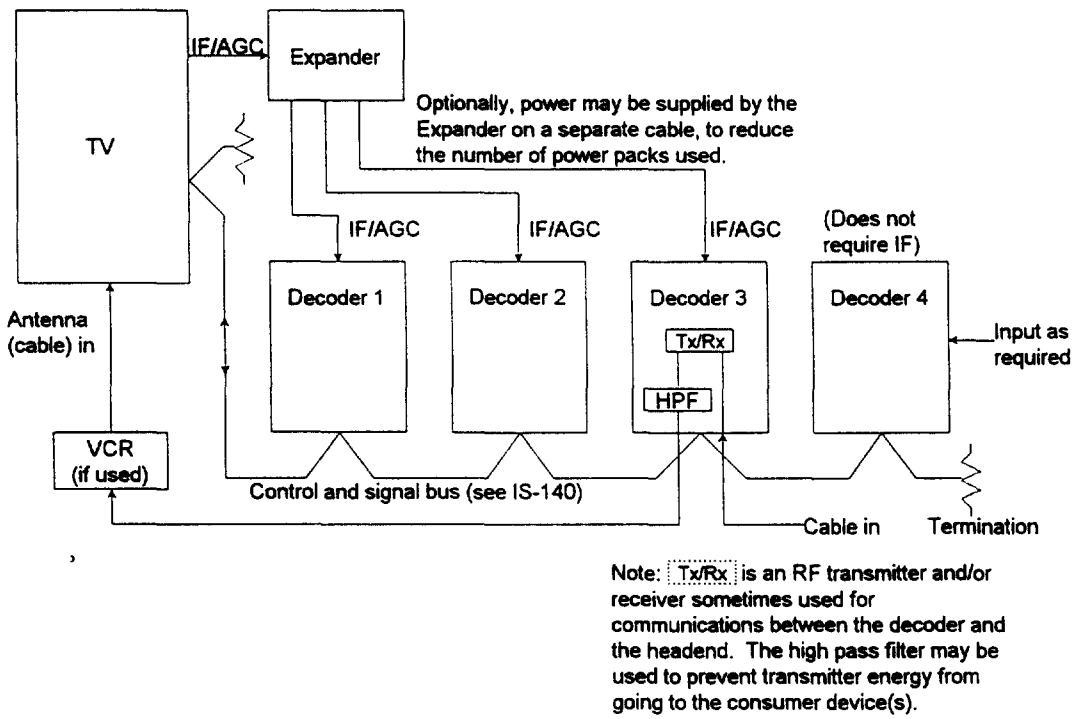

Figure 2. General Decoder Interface Operation with Multiple Decoders

Figure 2 illustrates four Decoders being connected with an Expander. The first three Decoders in this example require access to the IF signal from the TV, while the fourth does not. Optionally, the Expander may provide power at a standard voltage specified in section 3.3. If so, a particular connector is used to interconnect power on its own cable. If a Decoder wishes to use this standard power, it includes a compatible connector. The Decoder may operate from other than the standard power, but if it does, then it must always provide its own power.

Decoder 3 is shown taking an input from the incoming cable. This is necessary if out-of-channel control information is being transmitted, if video is being transmitted in some format other than 6 MHz channelization, or if using modulation that will not pass through the tuner. The control and video/audio signals are bridged from one Decoder to the next, in accordance with EIA 693, the Audio/Video Bus (AVBus) Physical Layer and Media Specification.

3. IF AND AGC CONNECTION

3.1 Architecture

See Figure 3 for an illustration of the IF/AGC interface. This figure is not intended to be needlessly restrictive in the design of the Receiver or Decoder. Rather, it illustrates the interface. Other circuits accomplishing the same functions are acceptable. Functions may be added or omitted as required, so long as the basic function of IF interface and delayed AGC control are met in accordance with this document.

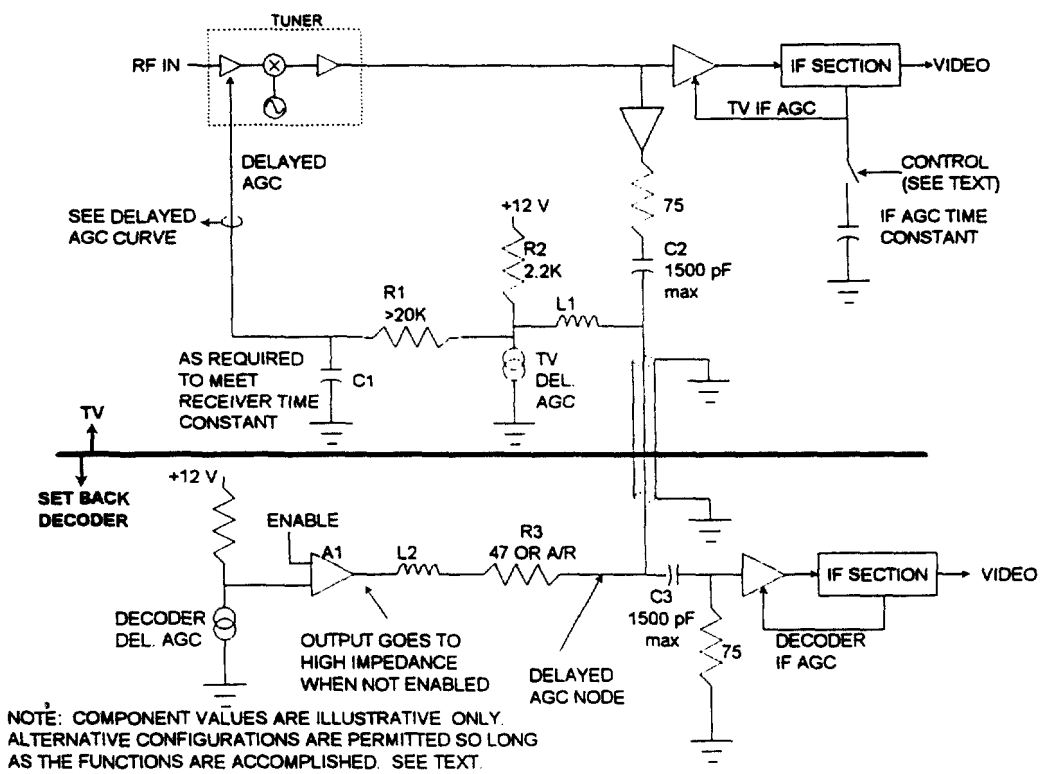

Figure 3. Partial Diagram of Decoder Interface, IF/AGC Connection

The delayed AGC signal is multiplexed on the coaxial cable which transmits IF signals to the Decoder. The Receiver and Decoder have independent IF AGC sections, but each must control the delayed AGC in the front end, when demodulating the video information. In order to accomplish this without the need for extra communication between the Decoder and Receiver, the Decoder includes an AGC output that is in the high impedance state when the Receiver is demodulating the video information.. When the Decoder is demodulating the video, its AGC control goes to a low impedance state, allowing it to over-ride the Receiver's delayed AGC. The specification allows for essentially 100% control by whichever delayed AGC generator is active. If the Decoder becomes unpowered, its RF AGC driver shall remain in the high impedance state.

Note that, in some cases the Receiver will be used to recover audio while the Decoder is recovering video, because the most common contemporary scrambling philosophy is to hide the video but not the audio. In these cases the Receiver's IF AGC will be used in the audio recovery process. The designer is cautioned to allow suitable dynamic characteristics for recovering audio under these conditions.

A scrambled picture may include sync at the normal level, or shifted into carrier levels normally reserved for active video. For example, the most common scrambling technique today results in vertical and horizontal blanking intervals being shifted, with the sync tips being shifted from -40 IRE to +40 IRE. The entire blanking intervals are frequently suppressed, though in some cases the VBI is retained at its normal level. The greatest amplitude of the RF envelope may then occur at black level, wherever that level appears in the picture, or the greatest envelope magnitude may occur at some other level, as a function of picture content. This can result in the AGC, which normally operates on the maximum envelope amplitude, "hunting" with changes in picture content. Since the maximum envelope amplitude may occur at any rate from line rate down to field rate, the AGC may try to "hunt" during the field.

This hunting may or may not cause a problem. The Receiver's IF AGC, which could be hunting, may well be controlling the active sound path. If the design of the sound IF and demodulator are such that the hunting does not cause audible problems, no harm is done.

Scrambling modes are changed in some systems as an anti-pirate measure. This could result in a change from a mode with sync suppressed, to a non sync suppressed mode. The change typically occurs during a vertical blanking interval.. Currently the maximum degree of sync suppression practiced is 10 dB. This sync suppression level results in sync being moved from -40 to +69 IRE. In at least one case, a 2.5 uS portion of the horizontal sync is transmitted at +100 IRE before suppression. If that signal is suppressed 10 dB, the level of that portion of the sync tip is transmitted at 114 IRE. This would appear to define the worst case range of peak envelope levels possible.

The IF AGC time constant control shown is optional and may be included if the Receiver manufacturer feels it is necessary to slow down the IF AGC when in the Decoder mode.

3.2 Interface Issues

The inductors used to diplex the AGC signal with the IF signal, L1 and L2, are critical. The designer must ensure that the inductors do not adversely affect the return loss of either the source (Receiver) or load (Decoder). This may necessitate a degree of bypassing on the RF "cold" side of the inductor, which works against loop stability when controlling gain from the Decoder.

Selection of the values of C2 and C3 is critical. Too low a value will adversely affect flatness of the IF path. Too high a value will adversely affect loop stability, especially when controlling gain from the Receiver. The coupling capacitors, in series with 75 ohms, plus the capacitance of the coaxial cable, forms a pole with R2. This pole must be at a high frequency compared with the R1-C1 pole. If the two poles approach each other the loop stability could be compromised.

The component values shown are illustrative and not intended to be a requirement: the tables in Section 4 list the IF/AGC requirements.

3.3 Expander

This section applies to those cases in which more than one Decoder requires access to the IF signal from the tuner. Figure 4 illustrates how the IF interface is accomplished electrically. This applies only if the Decoder must access the IF signal from the Receiver. The IF from the TV or VCR is connected to an Expander, which buffers the IF signal and splits it to supply multiple outputs, each of which exhibits unity gain from the input to the individual output of the Expander.

In addition, the Expander provides a return path for the RF AGC signal, so that it may be routed to the TV's tuner from the active Feature Unit. A Decoder must place its AGC control line in the low impedance (active) state only when that unit knows that it should be controlling AGC. This will generally be true only when the unit is processing a signal which has had its sync level modified before entering the TV.

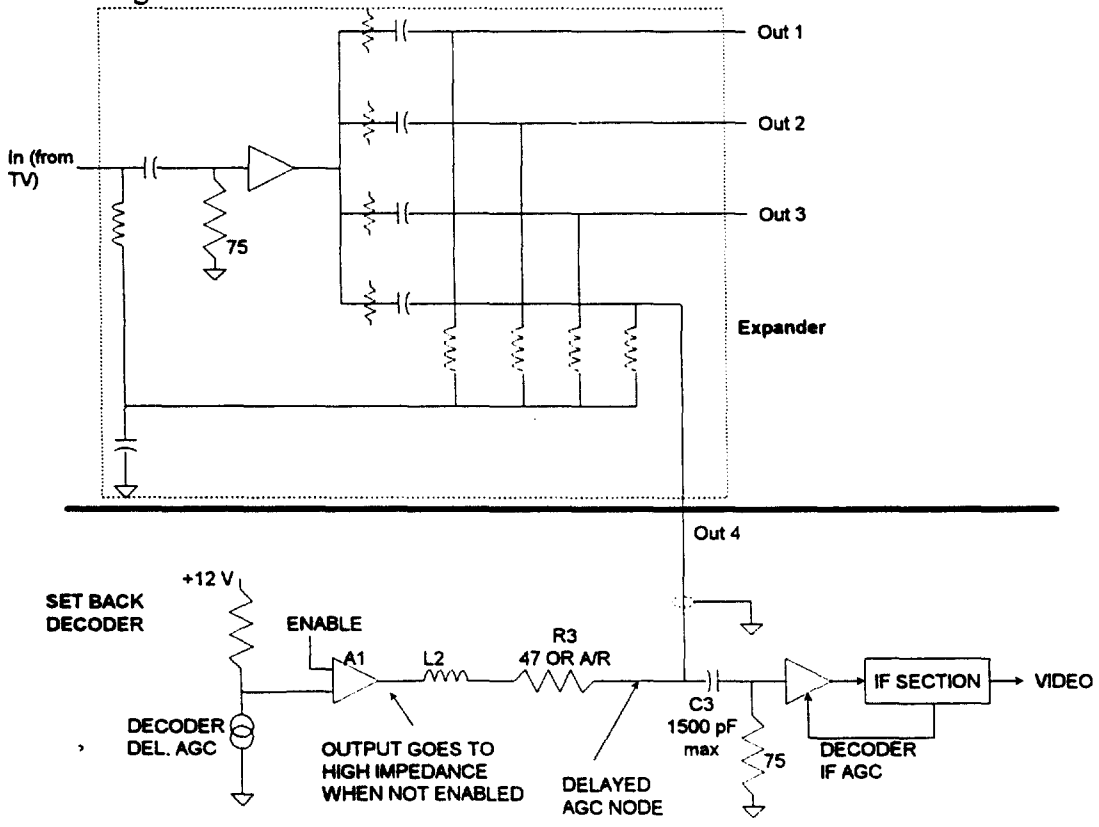

Figure 4. Expander IF Connection

The Expander has two or more outputs to serve two or more Decoders. It also may, at the manufacturer's option, be equipped to provide +12 volt power to the Decoders. This will remove the necessity for a subscriber using multiple Decoders, to have an individual wall power supply for each. If the Expander provides power, it shall provide +12 volts to power supply connectors, one connector for every IF output provided. Current should be limited to less than 1.0 Amperes on each output. A female connector shall be provided on the Expander.

Decoders and Feature Units shall preferably be powered from either 115 Vac (internal power supply, with ac cord) or +12 VDC. If powered from +12 VDC the maximum current drawn should not exceed 1.0 Ampere. The unit should operate normally with a ±10% variation in the supply voltage. If the unit is powered from external +12 VDC as above, it shall use the power connector specified in appendix D. This will permit the device to be powered from an Expander when such is used. Should the manufacturer choose to use an external power supply of other then +12 VDC at a maximum current of 1.0 Ampere, a power connector other than the type specified in appendix D shall be used, in order to prevent accidental connection to the Expander power supply.

3.4 IF Switch Option (Transfer Switch)

In order to facilitate using multiple decoders (such as for analog and digital, respectively, signals, a transfer switch may be employed in the IF path, to allow signals to be routed from more than one Receiver to more than one Decoder, as illustrated in figure 5.

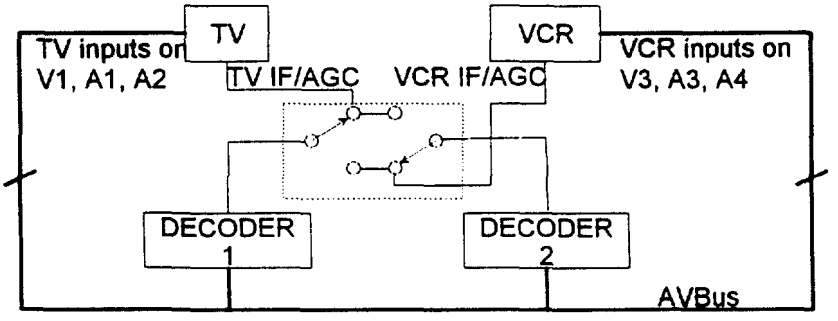

Figure 5. Transfer Switch to Allow Two Receivers to Share Two Decoders

The transfer switch shown in the figure allows the sharing of two different Decoders between two Receivers, most commonly a TV and VCR. Depending upon the position of the switch, either Decoder takes the IF signal from either Receiver, and supplies delayed AGC voltage back to that Receiver. Note that, because of the need to pass the delayed AGC voltage from the Decoder to the Receiver, the switch must pass direct current. The expected range of voltage to be passed is 0 to greater than 9 volts.

4. TABLES OF REQUIREMENTS

4.1 IF Characteristics

4.1.1 Applying to the Consumer Electronics device

The IF output signal supplied by the CE device to the Decoder shall conform to the following requirements:

4.1.1.1 Nominal IF Passband

The nominal IF passband shall be 41-47 MHz with the spectrum inverted from the as-received signal, resulting in a nominal visual carrier frequency of 45.75 MHz (for NTSC-based signal formats).

4.1.1.2 Tuner Amplitude Response

The amplitude response of the tuner shall meet the following specifications:

The peak-to-peak variation from 41 MHz to 47 MHz shall be no greater than 5 dB.

The peak-to-peak variation from 42 MHz to 46 MHz shall be no greater than 4 dB.

The peak-to-peak variation from 41.15 MHz to 41.35 MHz shall be no greater than 0.6 dB.

The response slope over the range from 43.5 MHz to 46 MHz shall be no greater than ±2 dB/MHz.

The response from 44 MHz to 45.75 MHz shall not vary by more than +3.5 dB/-2.5 dB relative to the value at 45.75 MHz.

4.1.1.3 Tuning Error

The tuning error when directed to a specific frequency by the external device shall be no greater than ±100 kHz.

4.1.1.4 Tuning Resolution

The Receiver shall have a tuning resolution of no greater than 62.5 kHz. (Note: it is assumed that, if the Decoder needs an IF frequency accuracy greater than the ±100 kHz tuning error described above, that the Decoder will re-tune the TV, in frequency increments no greater than 62.5 kHz. Thus, it is always possible for the Decoder to set the TV frequency within ±31.25 kHz of the Decoder's definition of the "correct" frequency. Note that the tuning error specification above does not include the error in the incoming carrier frequency.)

4.1.1.5 Settling Time

When directed to a specific frequency, the Receiver shall settle within 1/2 the resolution of that frequency in no more than 100 ms.

4.1.1.6 Out of Band Rejection

Frequencies offset from the center of the channel shall be rejected by the following amounts:

Offset	Rejection
± 6 MHz	≥3 dB
± 12.5 MHz	≥ 15 dB

4.1.1.7 Noise Figure

The noise figure of the tuner, measured at the IF output, shall be no greater than 10 dB.

4.1.1.8 Phase Noise

The phase noise shall not exceed the following values:

Frequency with respect to carrier	Noise (dBc/Hz)
1 kHz	-40
2 kHz	-60
10 kHz	-83
20 kHz	-89

4.1.2 Applying to the Set-Back Decoder

The Set-Back Decoder must process an IF Input that has relatively little bandpass shaping, and supply a demodulated composite video output back to the Receiver. In so doing, the Set-Back Decoder provides filtering for adjacent channel rejection, vestigial sideband (Nyquist) compensation and intercarrier sound rejection. The following are intended, not as requirements, but as guidelines for the aid of Decoder and Receiver video designers.

The frequency response measured from the Decoder IF input to baseband output should be nominally flat.

Relative Group Delay response of the decoder is expected to be nominally 0 ns to 3.0 MHz and to compensate the standard transmitter group delay pre-distortion of 170 ns at 3.6 MHz and 340 ns at 4.2 MHz.

4.2 Tabulated AGC Requirements

TABLE 1
OPEN LOOP DELAYED AGC INTERFACE REQUIREMENTS
(applying to TV or other consumer device)

	ITEM	VALUE	TOLERANCE
1.	Tuner gain† when V_{rfagc}=9 ±0.5V	+24 dB	Minimum
2.	Tuner gain when V_{rfagc}=1V	see note below	
3.	AC output impedance of consumer device (41-47 MHz)	75 Ohms	RL > 14 dB
4.	Coupling capacitor values	1500 pF	Maximum
5.	Interconnecting IF/AGC cable length	0 Meters 2 Meters	Minimum Maximum
6.	DC input resistance of consumer device (R2 of figure 3)	2200 Ohms 5000 Ohms	Minimum Maximum
7.	Receiver Gain/Time Constant for delayed AGC Input	1000 dB / (V*sec.)	Maximum
8.	Allowed Capacitance on Interface AGC line without RF AGC Instability	0.02 μF	Minimum
9.	Mechanical interface	F connector per SCTE IPS-SP-400	

Note: † Tuner Gain is measured from antenna input to IF output.
Item 2 - When signal input is +20 dBmV and delayed AGC is 1 volt, the IF out shall not exceed +32 dBmV.

460 **TABLE 2**
OPEN LOOP DELAYED AGC INTERFACE REQUIREMENTS
462 **(applying to Decoder)**

	ITEM	VALUE	TOLERANCE
1.	V_{rfagc} for IF in = 0	9 V	+/-0.5 V
2.	V_{rfagc} for IF in +32 dBmV	1 V	Maximum
3.	V_{rfagc} for IF in +28 dBmV		Within 0.1 volt of condition 1 above.
4.	AC input impedance of Decoder 41-47 MHz	75 Ohms	RL > 14 dB
5.	Total Capacitance to Ground on AGC line	0.002 µF	Maximum
6.	Interconnecting IF/AGC cable length	0 Meters 2 Meters	Minimum Maximum
7.	DC output resistance of Decoder's AGC drive when active	50 Ohms	Maximum
8.	DC output resistance of Decoder's AGC drive when inactive	47K Ohms	Minimum
9.	Mechanical interface	F connector per SCTE IPS-SP-400	
10.	RF AGC change per dB IF input change	4 V	Maximum
11.	Decoder IF AGC -10 dB Error Response Frequency for IF Input to Video Output	320 Hz	Minimum
12.	Decoder time constant for RF AGC	3 ms	Maximum

464 Note: items 1, 2, 3, 5, 7, 8, 10, 11, and 12 apply only to Decoders which control the receiver's AGC.

Table 3
Technical Specifications, Expander

	ITEM	VALUE	TOLERANCE
1.	Gain, IF input to any one IF output	0 dB	±0.7 dB
2.	Frequency Response (41-47 MHz)	+/- 0.2 dB	
3.	Triple beat	-60 dB	See Appendix A
4.	Supply voltage (if provided)	+12 VDC	±5%
5.	Supply Current (if provided)	1.0 amps per output	minimum

The subsections which follow amplify the requirements presented in the preceding tables. These subsections are not keyed to particular item numbers in the requirements tables. Refer to figure 3 as required.

4.2.1 Open Loop Decoder Behavior

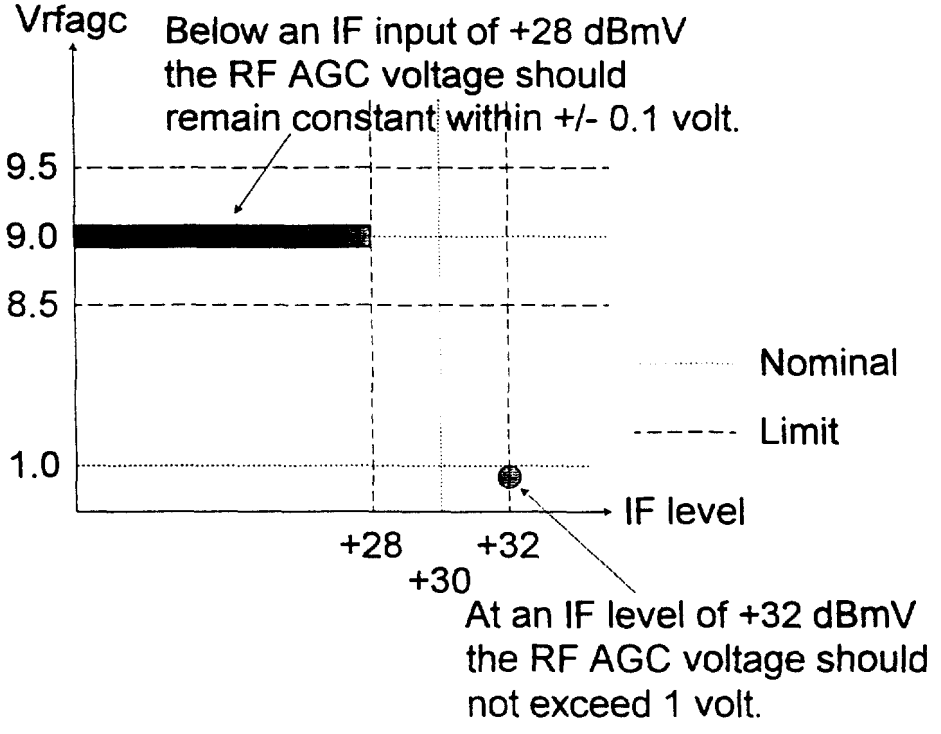

Figure 6. Open Loop Decoder Behavior

Figure 6 illustrates the RF AGC threshold as seen by the Decoder. Ordinarily the delayed AGC threshold is referenced to the input level. In this case however, the threshold at the output of the tuner is specified in order to allow the tuner manufacturer to determine the optimum delayed AGC threshold. The Decoder should not reduce the gain of the tuner when the Receiver's IF output is less than +28 dBmV, and the Decoder must reduce the gain before the Receiver's IF output reaches +32 dBmV.

4.2.2 Return Loss

The return loss specification is necessary to ensure that frequency response does not degrade by more than 0.11 dB as a result of mismatch between the Receiver and Decoder(s).

4.2.3 Cable Length

The interconnecting IF/AGC cable length is limited in order to limit the capacitance of the cable and also to limit the frequency response error induced as a result of mismatch. The two meter maximum cable length includes all Decoder Interface cabling from Receiver to farthest Decoder connected to the IF output.

4.2.4 Decoder AGC Driver Output Resistance

The output resistance of the Decoder AGC driver, A1, must be controlled in both the low and high impedance states, in order to ensure that the Receiver's AGC will be over-ridden or not affected, as appropriate. Similarly, the resistance of the Receiver's AGC must be controlled to ensure that the Decoder can over-ride the RF AGC.

4.2.5 Value of Receiver Delayed AGC Source Impedance

R2 must have a maximum value such that it will not be loaded by the inactive state of the Decoder AGC output. Further, if the value is too high, the dynamics of the loop will be drastically different between Receiver and Decoder control: When controlled by the Receiver, the time constant of the loop is controlled by R1+R2. When controlled by the Decoder, the time constant is controlled by R1 (ignoring R3). Also, when AGC is controlled by the Receiver, R2 will form a second time constant with C2 plus C3 plus cable capacitance.

4.2.6 Delayed AGC Time Constant

The minimum time constant of the Receiver's delayed AGC loop is important to the designer of the Decoder, as it has an influence on the stability of the loop.

4.2.7 Delayed AGC Voltage Range

The Decoder presents about nine volts when it is controlling the tuner and calling for maximum gain.

5. A/V/CONTROL

5.1 General Specification

The A/V/Control connector (as defined in EIA-693) of the Decoder Interface carries baseband video and audio information from the Decoder to the Receiver in the form of balanced differential signals on twisted pair wiring. Additionally, the connection supports a bi-directional control line for control and status messaging between Decoder and Receiver. The A/V/Control cable consists

of 13 individual twisted pairs to carry the control line, up to four audio lines, up to seven video lines (the last three if which are reserved for future assignment), and a common mode reference. The Decoder Interface requires support for a minimum of the control line, one video pair, one audio pair, and the common mode reference. Requirements are further defined in the section on Audio/Video Line Usage (Section 5.7). Figure 7 depicts the A/V/Control cable.

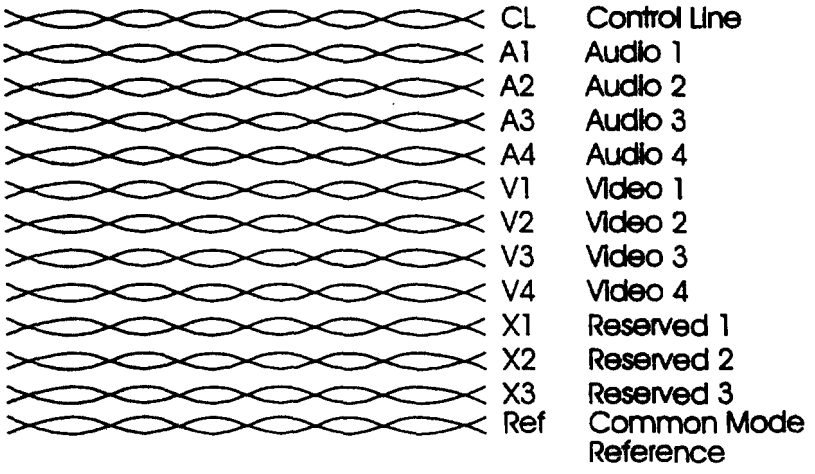

Figure 7. A/V/Control Connector Usage

5.2 Mechanical Specifications

Cable Assemblies for A/V/Control shall consist of a length of bulk cable attached at each end, only to the approved connectors, as described in Section 4.4.

5.2.1 Cable Construction

Bulk cable used for A/V/Control shall consist of 13 twisted pair wires of 28 AWG each. The cable may be round or flat and with, or without, a flexible jacket. The cable *shall not* contain any shielding. Any single, terminated cable assembly shall not exceed 10 meters in length.

5.2.2 Signal Assignments

A/V/Control cables shall be assembled using the Contact and Signal Assignments of Figure 8.