DOCKET FILE COPY ORIGINAL

Bell Atlantic

Bell Atlantic Network Services, Inc.
1133 Twentieth Street, N.W.
Suite 800
Washington, D.C. 20036
202 392-6990

Marie T. Breslin
Director
FCC Relations

RECEIVED
MAR 24 1997
Federal Communications Commission
Office of Secretary

EX PARTE

March 24, 1997

Mr. William Caton
Acting Secretary
Federal Communications Commission
1919 M Street, N.W.
Washington, D.C. 20554

Re: CC Docket 96-128, Bell Atlantic's Payphone Comparably Efficient Interconnection (CEI) Plan

Dear Mr. Caton:

On March 21, 1997, Bell Atlantic met with Brent Olson and Christopher Heimann of the Common Carrier Bureau. Bell Atlantic was represented by Paul Francischetti, Cecelia Roudiez and the undersigned. The purpose of the meeting was to discuss Bell Atlantic's response to the recent ex parte filed by the Inmate Calling Service Providers Coalition (ICSCP). Copies of the three diagrams distributed during the meeting are attached. Also attached is an additional diagram that depicts intraLATA and interLATA collect calling from inmate facilities using "store and forward" processing of collect calls for both the interLATA carrier and the intraLATA carriers.

ICSPC asserts that collect calls from inmate telephones are a deregulated payphone service and urges the Commission to reject Bell Atlantic's CEI Plan because Bell Atlantic, in its Reply Comments, indicated that collect calls transported by Bell Atlantic as the presubscribed carrier for intraLATA calls were to continue as a regulated service. These are state or federally tariffed operator service calls. As explained below, ICSPC's claim lacks merit. Even if it were a valid claim, it would still not justify rejection of the CEI Plan because it essentially affects only the accounting treatment of such collect calls. In addition, it raises the issue of whether a LEC payphone provider can resell interLATA collect calls.

No. of Copies rec'd 0+2
List ABCDE

Specifically, the fundamental issue is whether the revenues and expenses for intraLATA collect calls should be treated as an operator service in the same way as IXC transported interLATA collect calls from the same payphone or, alternatively, as an aggregator resale service in substantially the same manner as local coin calls which have been deregulated and detariffed. If the former, then Bell Atlantic's regulated operator services will be required to pay per call compensation or commission to LEC and non-LEC payphone service providers (PSPs) that presubscribe their payphones to Bell Atlantic as the intraLATA carrier. If the latter, the rates and total revenues received for the collect calls would be booked as deregulated revenues. The expenses associated with these calls, including tariffed rates for the underlying toll transport and billing validation, as well as billing and collection fees, would be classified as deregulated expenses. Additionally, states would be preempted from imposing different regulations for collect calls based on whether the inmate or other collect call provider is a LEC or non-LEC PSP.

ICSPC presents three arguments to support its claim that collect calls must be structured to mirror the resale model used by non-LEC providers. First, it argues that collect calling from inmate payphones is "essential" to inmate services and must be deemed part of the deregulated inmate telephone service. Bell Atlantic agrees that collect calls are critical to inmate services. The Commission's Inmate Services and Payphone Orders that deregulated inmate telephones as customer premises equipment (CPE), however, do not specifically prescribe the deregulation of collect calls placed by inmates and billed to Bell Atlantic's local exchange subscribers at tariffed operator service rates.

Moreover, the regulatory treatment of collect calls is not unique to inmate services. Coinless(charge-a-call) payphones also exclusively handle collect and other alternately billed calls. Those alternately billed calls are presently subject to federal and state regulation as carrier-provided telecommunications services. Thus, Bell Atlantic concluded that the statutorily mandated compensation for each completed call (whether inmate or coinless telephone) would derive from per call compensation or commission from the presubscribed interLATA and intraLATA carriers, respectively, and not from the end users.

ICSPC 's second argument relates to uncollectibles due to fraud and nonpayment. It argues that leaving the risk for such uncollectibles solely with the regulated operator service provider constitutes an impermissible subsidy of deregulated inmate service. It does not specify any data substantiating what the incidence of fraud is or how such fraud compares to operator service calls generally. At any rate, its argument misses the mark. Uncollectibles are not unique to collect calls from inmate payphones and occur in any business and in particular, affect alternately billed calls (card, collect and third party) that are made from payphones other than inmate payphones. The presubscribed IXC will also be subject to fraud and other uncollectibles, but will still be expected to compensate the payphone provider

An appropriate test for subsidy would be whether the regulated revenues derived from and actually collected by a LEC for operator service calls recover all expenses for the calls including commissions payable to the payphone service providers, LEC and non-LEC PSP alike. At present, the rates for LEC operator service calls are included in approved tariffs subject to state review as cost based rates that do not effect any subsidy of payphones from local exchange or exchange access revenues.

Finally, ICSPC assumes that all inmate calls must be purchased , resold and billed by the payphone provider in the same way that ICSPC's members have apparently elected to operate their service. Essentially, rather than receiving compensation from carriers for alternately billed collect calls, the PSP resells transport and directly bills the end user at rates that are established by the payphone provider. RBOC payphone providers are, of course, prohibited from such resale of interLATA calls until they are eligible for in-region long distance relief. Thus, ICSPC appears to argue that while commissions may be appropriate for interLATA calls, they are not appropriate for intraLATA calls.

One means of resale is accomplished by a "store and forward" method. When an inmate dials a 0+ automated call, the PSP, either in the set or through ancillary equipment, stores the number and redials the call as a direct dialed or 1+ call with a recording requesting that the called party signal acceptance of a collect call. The call is billed to the PSP by the carrier transporting the call at direct dialed rates. The PSP, in turn, bills the party that accepted the collect call at rates set by the PSP. The store and forward method is transparent to the inmate placing the call as well as the recipient of the call who agrees to accept charges. These calls from the perspective of the consumer are indistinguishable from other collect calls placed by dialing 0 plus the called number.

The store and forward method is not unique to aggregators providing inmate telephone services and is also considered an accepted mode of providing operator services. Both aggregators and operator service providers may use store and forward technology. For example, the state regulations in New Jersey define operator service provider as any "any telecommunications carrier that provides operator-assisted services." "Operator assisted services are defined as "services which assist consumers in the placement or charging of a telephone call either through live intervention or automated intervention, including automated store and forward technology where the placement or charging of a telephone call is accomplished at an aggregator location." N.J.A.C. 14:10-6.2 An "aggregator" is defined as "a person or entity which, in the ordinary course of its business, makes telephones available to the public or to transient users of its premises, including, but not limited to , hotels, motels, hospitals, or universities, and which provides operator assisted -services through either automated store and forward technology or through an operator service provider." N.J.A.C. 14:10-6.2 Thus, these definitions recognize that an operator service provider or an aggregator may use store and forward to provide automated operator assisted calls.

As these definitions also make clear, the use of store and forward technology may extend to payphones generally. For example, in many instances, a PSP may program a smart set to redial a 0+ intraLATA toll call that would otherwise go to a LEC to an alternate carrier by storing and forwarding the call by redialing the call with an access code prefix. Bell Atlantic, in most of its inmate facilities, uses the store and forward method by contracting with a third party that processes calls for both Bell Atlantic and the presubscribed IXC using equipment owned by the vendor. The vendor charges fees to both Bell Atlantic and the IXC for its services and delivers the message detail to each for billing purposes and these calls are billed in the same manner and at the same rates as collect calls generally. The call processing in these instances has been viewed as adjunct to Bell Atlantic's operator services. A diagram showing the typical call flow is attached. In a few instances, the equipment is actually owned by Bell Atlantic or no equipment or store and forward methods are not used.

The above explanation provides the bases for Bell Atlantic's representation that it had not expected that it could or would be able to resell collect calls part of the deregulated payphone service.

Sincerely,

Marie Breslin

Attachments

cc: R. Welch
C. Heimann
B. Olson

Bell Atlantic Inmate Telephone Services

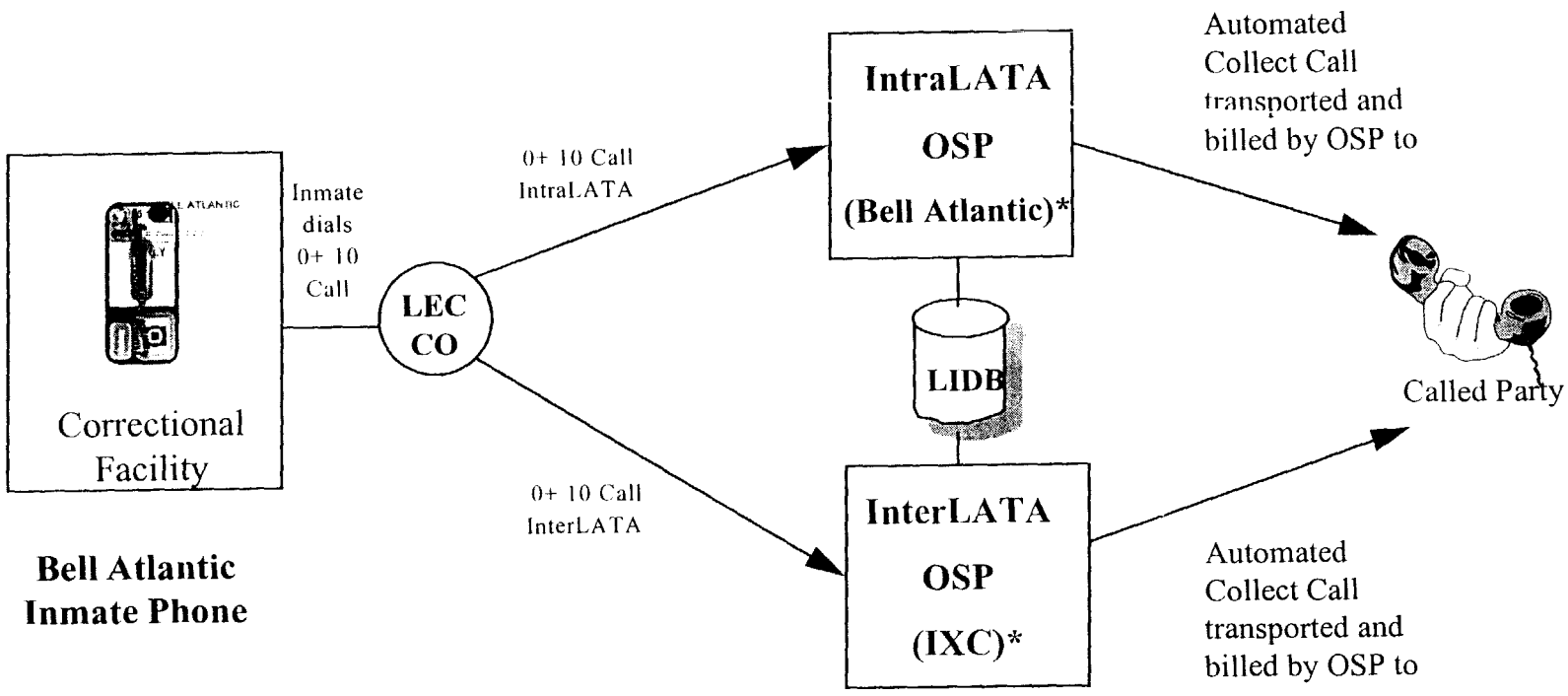

Bell Atlantic Inmate Phone

* Pays PCC/Commission to Inmate Telephone Service Providers

Collect Calling from Payphones

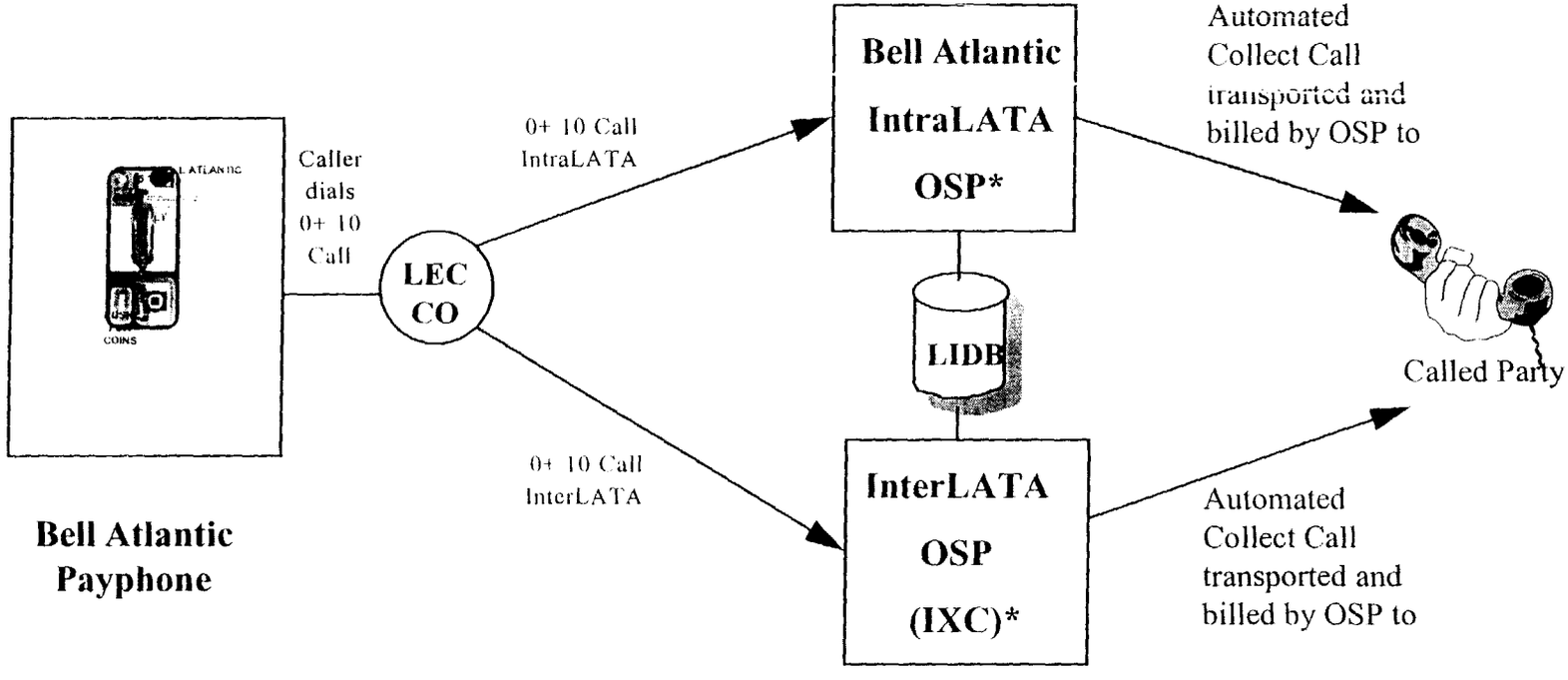

* Pays PCC/Commission for collect calls originating from payphones in same manner as other alternately billed calls (collect + Third number)

IPP Inmate Services

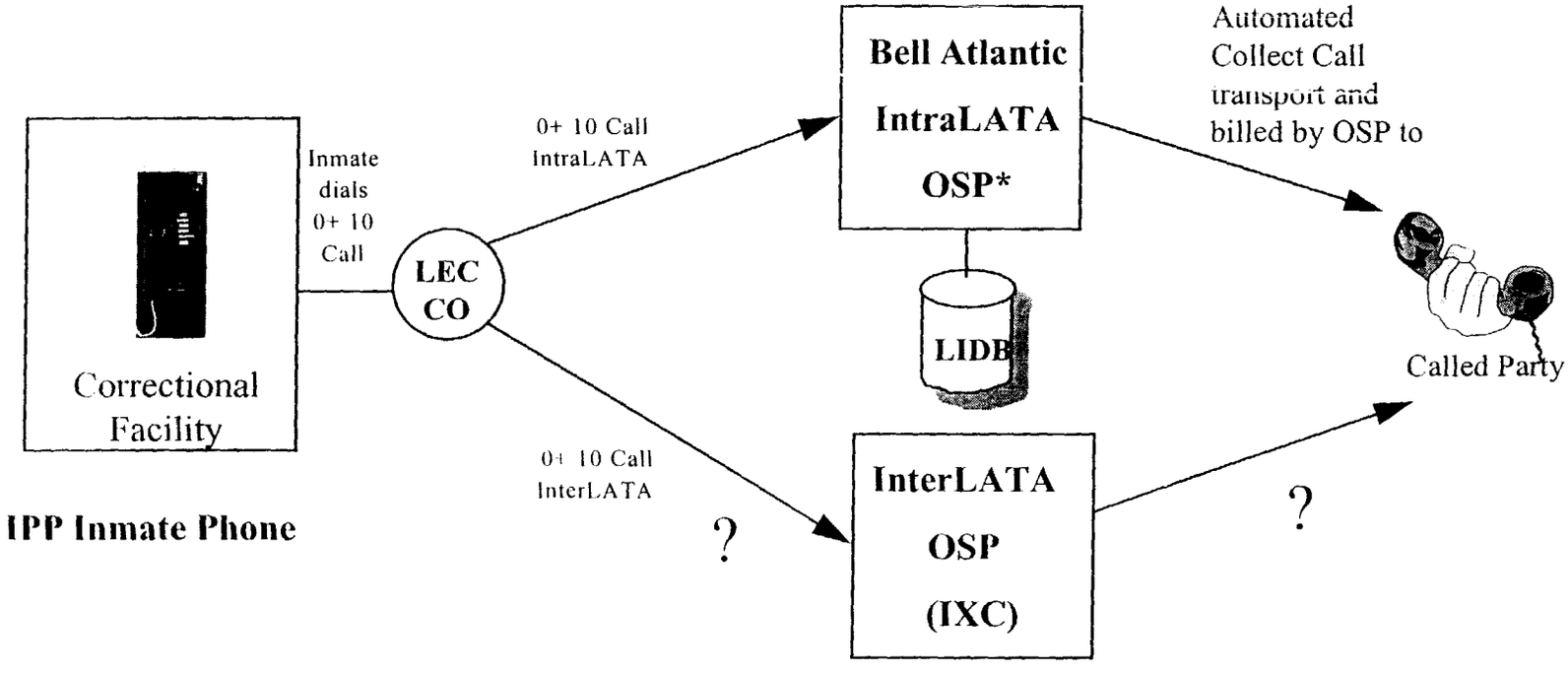

* Pays PCC/Commission to Inmate Telephone Service Providers for calls made from their inmate phones

Inmate Collect Calling

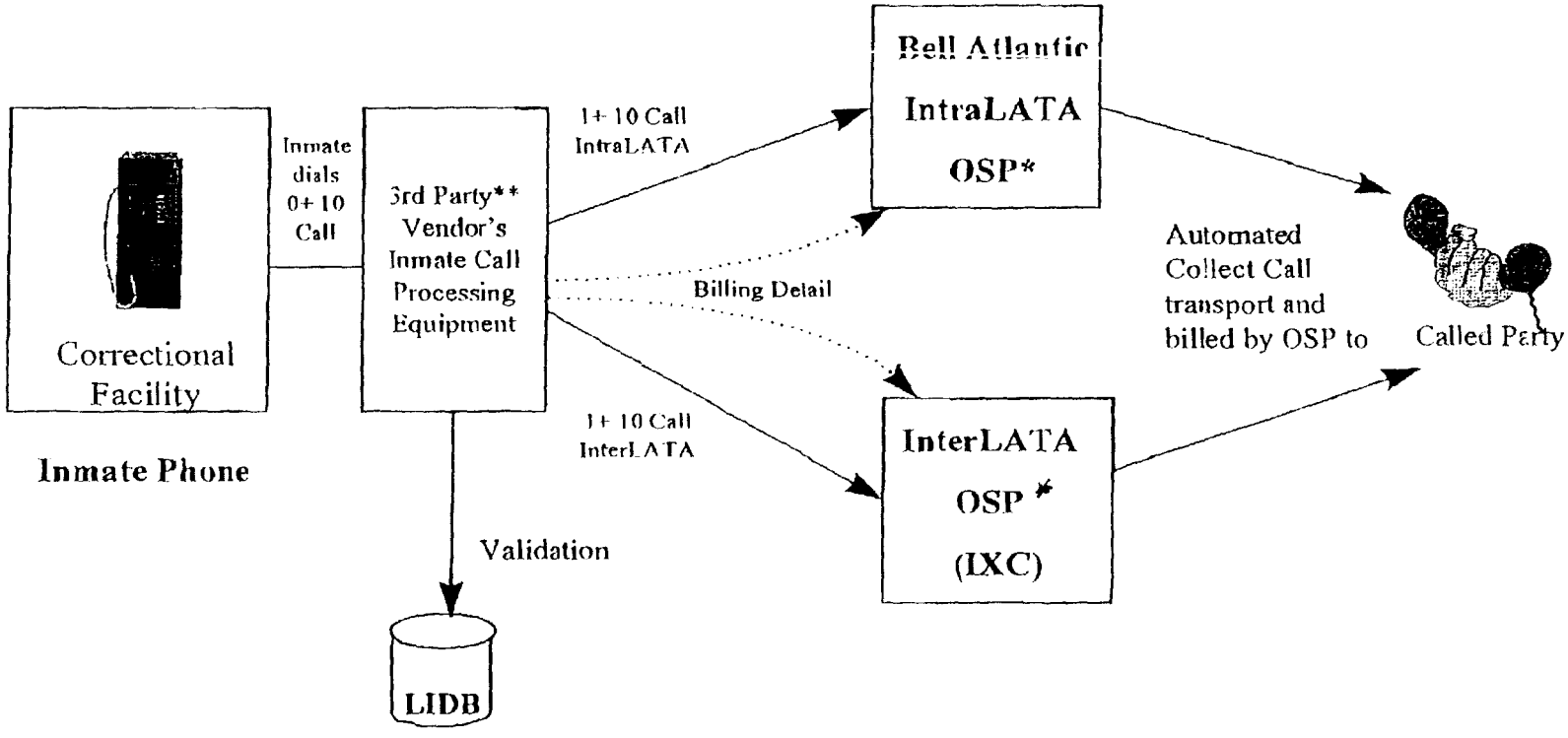

* Pays PCC/Commission to Inmate Telephone Service Providers for calls made from their inmate phones

** Call processing equipment owned by 3rd party vendor is utilized in over 80% of inmate accounts. In a few cases, Bell Atlantic owns the equipment. In the remaining accounts, no call processing equipment is utilized.

Bell Atlantic, 03/24/97