NYNEX
Government Affairs
1300 I Street NW, Suite 400 West, Washington, DC 20005
Tel 202 336 7890

Alan S. Cort
Director, Federal Regulatory Matters

EX PARTE OR LATE FILED

APR 18 1997

NYNEX

April 18, 1997

Ex Parte

Mr. William F. Caton
Acting Secretary
Federal Communications Commission
Room 222
1919 M Street, NW
Washington, DC 20554

RE: **In The Matter of Telephone Number Portability Further Notice of Proposed Rulemaking Regarding Cost and Cost Recovery of Long Term Number Portability CC Docket No. 95-116**

Dear Mr. Caton:

On Thursday, April 17, 1997, Marie Breslin of Bell Atlantic and Peter Hughes and Alan Cort of NYNEX met with Neil Fried, Lenworth Smith, Chris Barnekov, Lloyd Collier, V. Gupta and John Scott of the Common Carrier Bureau on the above noted proceeding.

A presentation on the NYNEX-Bell Atlantic position on cost recovery for long term local number portability that was the main topic of our meeting is attached. This material is consistent with the positions both companies have previously filed in this proceeding.

In addition, NYNEX discussed an alternate technical solution for local number portability. Materials used during this part of the meeting are also attached. Finally, Bell Atlantic reviewed their position regarding Limited Liability Corporations. A copy of an Ex Parte filed by Bell Atlantic on April 10, 1997 on this topic is also attached.

No. of Copies rec'd 0+1
List ABCDE

NYNEX Recycles

Questions regarding this matter should be directed to Alan Cort at 202-336-7890, or Marie Breslin at 202-392-6990.

Sincerely,

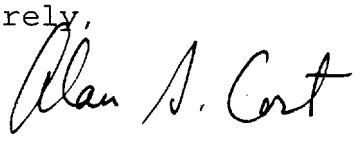

Attachments

cc: N. Fried
L. Smith
C. Barnekov
L. Collier
V. Gupta
J. Scott

Number Portability Cost Recovery

Bell Atlantic & NYNEX

April 17, 1997

Agenda

- Review of the Act, Order and FNPRM
- Comparison of Industry Costs
- Preliminary Costs
- Recovery Methodology

The Act

"The cost of establishing telecommunications ...number portability shall be borne by all telecommunications carriers on a competitively neutral basis as determined by the Commission." (§ 251(e)(2))

The Act, Order and FNPRM

- Conceptually similar to Universal Service
- Competitive neutrality a key requirement
- For consumers manner of cost recovery should not be a decision maker
- FCC is the driver in implementing recovery
- FCC's criteria must be applied equally to incumbents and new entrants

Example: TRS Fund Contributors

Industry Segments

- CAP
- Cellular
- IXC
  (Committed to N-1)
- LEC
  (Incumbent, New Entrant)
- Mobile
- OSP
- Pay Telephone
- PCS
- Reseller
- Other

Factors Affecting Unit Costs

- Retrofit vs. Start new
- Buy vs. Build
- Fixed vs. Variable Costs
- Customer Flow
- Existing network
- Technical solution
- RFPs
- Unbundled Network Elements
- Requirements to provide number portability?

Factors' effects on Industry...

ILEC	Retrofit, build, high # of nodes, lose users
Cellular	Retrofit, buy, few nodes, lose users
CLEC (w/ntk)	Start new, buy, few nodes, gain users
IXC (w/N-1)	Retrofit, buy, few nodes, maintain users
PCS	Start new, buy, few nodes, gain users
IXC (w/o N-1)	No requirement but "buy" queries
CLEC (w/o ntk)	Buy, gain users
Reseller, OSP, Payphone	No requirements

Costs required by FCC Order
($ Millions)

Industry Segment	Network Expenditures
ILEC	2,500
CMRS	700
CLEC	25
Total	3,225

No other industry segment has yet to place costs on the record. Thus, the numbers used are estimates.

Outcome...

- Comparison on unit basis may not be credible
- Determination that bearing own costs cannot be made without proof
- Allocation of costs is the only way to ensure competitive neutrality

Cost Assumptions

- Costs *caused by* number portability
- Capabilities for AIN, SS7, Ability to query db for reasons other than number portability are already in network
  - Thus the costs are not included here
- Costs not finalized
  - Estimates and unknowns
- Reconsideration Order may do little to reduce costs

Bell Atlantic's Preliminary Costs

	1997		1998		1999	
Categories#	Capital	Expense	Capital	Expense	Capital	Expense
EO/Tandem*	29.9	27.7	21.6	20.0	2.2	2.0
IOF	4.8	0.4	3.7	0.3	0.4	
Signaling, Db	36.0		27.0		3.0	
OSS	2.3	23.2	1.7	16.8	0.2	1.7
LSMS	0.5	2.5	0.5			
Total	73.5	53.8	54.5	37.1	5.8	3.7

Source: Bell Atlantic's Reply in Support of Its Petition for Clarification and Partial Reconsideration, October 10, 1996
Costs for 2000 and 2001 not displayed but total approximately $27.8 Million
* Eng & Translation included under expense in this category

NYNEX's Preliminary Costs

	1997		1998		1999	
Categories	Capital	Expense	Capital	Expense	Capital	Expense
EO/Tandem	47.6	32.8	18.6	16.9	2.3	3.6
Opr Svcs	1.2	4.3	0.8	2.7	0.3	0.6
IOF	2.6	0.5				
Signaling, Db	18.0	3.8	5.7	13.2	2.4	3.9
OSS	9.8	26.2		28.0		
$'s Advanced	12.9	5.4				
LSMS/LSOA	6.1	2.3				
Total	98.2	75.3	25.1	60.8	5.0	8.1

Key points...

- Cost estimates are preliminary

  <u>However</u>:

- Bell Atlantic & NYNEX are pursuing an efficient, cost effective solution
- Costs are being incurred
- Need Commission action now

Allocation and recovery are inseparable...

- To ensure that the recovery is not a decision maker for end users, recovery needs to be:
  - mandatory
  - explicit
  - equal
- But what is proper allocator?

Possible Allocators

- Gross Revenues
  - Discarded by FCC due to "double counting"
- Gross Revenues minus Charges paid to other carriers
  - Potential exclusion of charges hurts competitive neutrality
- Retail Revenues
  - Maintains competitive neutrality without flaws

Funding Number Portability

Funding Methodology	LECs	IXCs	Others
Retail Revenues	45%	40%	15%
Gross Revenues net Payments	60%	26%	14%
Interstate Retail Revenues	13%	79%	8%
Interstate Gross Revenues net Payments	39%	55%	6%

- Other includes Cellular, CLECs, etc.
- Based on 1995 TRS data

E.g. Number Portability = $500 M
(Two companies)

($ Millions)	*Carrier A*	*Carrier B*
Retail Revenue	2,000	2,000
Carrier Revenue	1,000	-
Gross Revenue	3,000	2,000

Case 1: Use Retail Revenues. Total = $4,000 million

Carrier A pays $250 million and Carrier B pays $250 million

Surcharge Retail:

Carrier A = 12.5% and Carrier B = 12.5%

Explicit and Competitively Neutral

E.g. Number Portability = $500 M
(Two companies)

<u>Case 2</u>: Use Gross Revenues net payments

Carrier A pays $375 million and Carrier B pays $125 million

Collection:

If Carrier A applies surcharge to all revenues, then required end user surcharge:

Carrier A = 12.5% and Carrier B = 12.5%

Appears Competitively Neutral, but -

E.g. Number Portability = $500 M
(Two companies)

If LEC may not apply surcharge on:

- TELRIC network elements
- Wholesale charges for resale
- Access charges

then when both apply the surcharge to end users -

Carrier A = 18.75% and Carrier B = 6.25%

Alternative Approach?

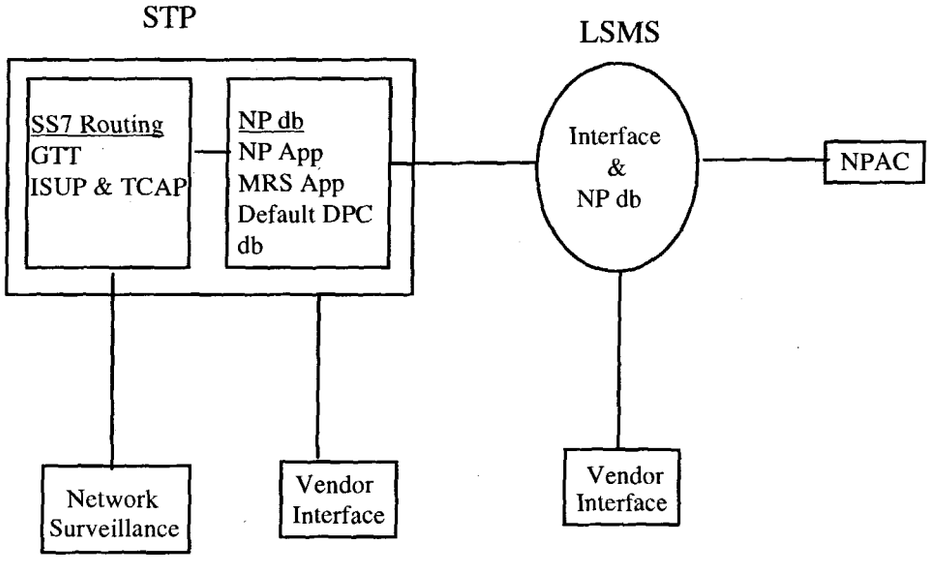

Legend	
App	Application
db	database
DPC	Destination Point Code
GTT	Global Title Translation
ISUP	Integrated Services Digital Network (ISDN) User Part
LSMS	Local Service Management System (SMS)
MRS	Message Relay Service
NP	Number Portability
NPAC	Number Portability Administration Center
SS7	Signaling System # 7
TCAP	Transaction Capabilities Applications Part

Alternative approach?

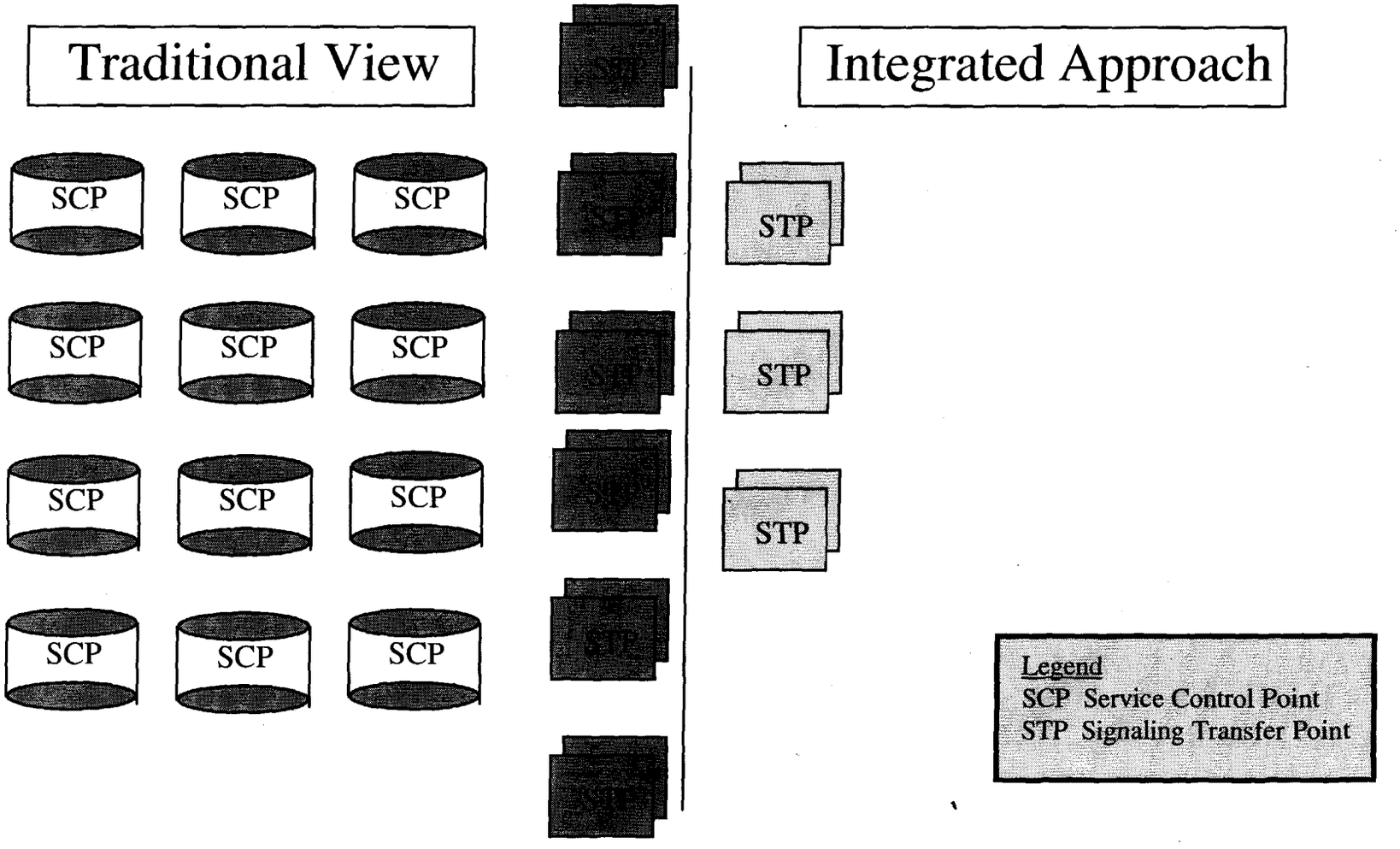

Pros & Cons Of Alternative Approach

Pros	Cons
• Queries	• Service Specific
• Link Design	• Unproven Commodity
• Links and Facilities	• Fit with existing infrastructure?
• Power	• Start new?
• Space & Buildings	
• Start new?	

Bell Atlantic

Bell Atlantic Network Services, Inc.
1133 Twentieth Street, N.W.
Suite 800
Washington, D.C. 20036
202 392-6990

Marie T. Breslin
Director
FCC Relations

April 10, 1997

EX PARTE

Mr. William Caton
Acting Secretary
Federal Communications Commission
1919 M Street, N.W.
Washington, D.C. 20554

Re: CC Docket 95-116

At the request of Commission staff, Bell Atlantic met yesterday with Carol Mattey, Steven Teplitz and Kyle Dixon of the Common Carrier Bureau. Bell Atlantic was represented by John Goodman and the undersigned.

The purpose of the meeting was to explain Bell Atlantic's position and concerns regarding Limited Liability Corporations and the Local Number Portability Administrator related recommendations of the NANC LNP Working Group. The views expressed by Bell Atlantic are reflected in the attached documents which were distributed during the meeting.

Please call me if you have any questions concerning this filing.

Sincerely,

Marie Breslin (for)

Attachments

cc: C. Mattey
K. Dixon
S. Teplitz