care to engage in disciplined fact finding as to claims by the BOCs that congestion is being caused by the fact that ISPs are charged on the same basis as ordinary businesses. Responsible public judgments cannot be based on highly selective facts self-servingly proffered by the BOCs out of the mass of truly relevant evidence within their sole possession. If the BOCs want the Commission to evaluate their assertions regarding network costs caused by ISPs, they should, in the context of structured fact-finding proceedings, be required to provide the Commission with all the necessary and relevant data they have accumulated over the past two years regarding the emergence of ISP traffic on their local networks, and not just a few isolated studies.

The Commission must be provided by all BOCs with accurate numbers reflecting the number of second lines sold for ISP usage, and revenues BOCs obtained from those sales, the total revenue amounts earned by sales of lines and trunks to ISPs, and installation charges associated with those sales.

BOCs must also provide data on the number of ISP lines and trunks which are installed line side and trunk side, and the specific cost associated with installation for each. In addition, BOCs must provide data regarding the sale of Internet dial-up accounts by their own subsidiaries, and the costs borne by BOCs to provide the network elements for their own Internet dial-up customers. If the costs for the network are as high as the BOCs claim, then the Commission must investigate exactly how the BOCs are able to provide the competitively priced Internet dial-up access they offer. It makes no sense that some BOCs claim they

are using higher cost, alternative bypass networks for their own Internet dial-up customers, and complain about the high increased costs dial-up services cause to the PSTN, yet they still price their dial-up service offerings competitively, and in some cases give away service for free. For example, Pacific Bell recently offered five months free Internet service bundled with the sale of a second telephone line for $11.25 per month.[16]

Moreover for such an evidentiary inquiry to be successful, there must be a substantial opportunity for discovery by ISPs and other members of the public of information under the sole control of the BOCs. USIPA suggests that the Commission appoint an administrative law judge or other competent official to administer as a first phase of the fact finding proceeding a discovery process that will include interrogatories, document production and deposition of witnesses. In this way, all parties can proceed on the basis of knowledge of all the relevant facts and the resulting interchange will be far more valuable to the Commission.

Only in the context of a structured evidentiary proceeding, can the Commission conduct the proper fact-finding and cross examination, and make an appropriate determination regarding costs to the PSTN caused specifically by ISPs and the costs imposed upon ISPs by the BOCs. Moreover, factual inquiry is required into the real causes of alleged congestion and other BOC failures to provide adequate service to ISPs. What did the BOCs know about the developing Internet service market and when did they know it? If congestion has

[16] See Remarks of Jamie Love before the FCC Bandwidth Forum, January 23, 1997. In addition, Bell Atlantic charges $17.95 for dial-up Internet service and offers a one month free trial.

occurred in past instances, is there reason to expect that it will occur again in the future? How can the BOCs claim that they did not anticipate a growing Internet access market, on one hand, while they prepared their own large scale entry into that market, on the other hand?

CONCLUSION

The Commission should not give further consideration at this time to any increase in the charges imposed upon ISPs for providing Internet access. BOCs should be reminded of their obligations to furnish service to ISPs in a timely manner. If, however, at some future time, the Commission should make a general inquiry into the relationship between ISPs and LECs, it should address the issues set forth and the procedures proposed in Section M above.

Respectfully submitted,

UNITED STATES INTERNET
PROVIDERS ASSOCIATION

By its attorney,

William J. Byrnes
7921 Old Falls Road
McLean, VA 22102-2414
(703) 821-3242

April 23, 1997

Proposed ISP Access Fees

from an

Economic Perspective

A Study Prepared for the United States Internet Providers Association (USIPA), to be filed with its Reply Comments in the Commission's Notice of Inquiry, CC Docket 96-263 (Usage of the Public Switched Telephone Network by Information Service and Internet Access Providers) by

Glenn G. Gebhardt*

April 23, 1997

* Mr. Gebhardt has been working as network design engineer in the telecommunications industry for the past ten years, and working in the ISP industry specifically for the past two years. This study has also been prepared by Mr. Gebhardt in conjunction with his pursuit of a Masters degree program in Telecommunications from the George Washington University, Washington, D.C.

TABLE OF CONTENTS

I. Introduction 1

II. The Network 3

Diagram 2 5

III. The Bell Atlantic Study 6

A. An Overview of the Report 6

B. Study Results 10

C. Network Impacts 13

D. Cost Impacts 19

Fig 2. 20

Fig 3. Sources of Costs and Revenues From Calls to ESPs 22

Fig 4. Second Phone Line Statistics. 24

Total Revenue Generated to LEC by ISP Traffic: 26

Diagram 3 27

E. Emerging Technologies 28

IV. Alternate Strategic Possibilities 29

V. Conclusion 34

Bibliography 36

Internet Resources 37

I. Introduction

With the phenomenal growth of the Internet have come major controversies as to how the growth can be managed and the Internet can be controlled. The Internet stands to be a major profit center for the telecommunications industry and industry in general. Everyone is jockeying for a position at the trough. The Regional Bell Operating Companies (RBOCs) are no different. The RBOCs however, occupy an enviable strategic position; they still control access to the end-user. The RBOCs have recently opened a Pandora's box by requesting that the FCC eliminate the special exemption extended to the Enhanced Service Providers (ESPs) as a result of the Computer II decision of 1982. The ESPs were exempted from paying access fees to the RBOCs due largely to the fact that enhanced services was a new industry and that it was unclear how this segment of the industry would fit into the overall separation policy outlined by the MFJ.

Today the RBOCs claim that the ESP/ISP industry is no longer a fledgling industry and as such should have to pay access fees much like the interexchange carriers are doing. Therein lies the controversy. Taken at face value the RBOCs' reasoning seem compelling, yet there is still a significant need to examine the issues more closely. How this matter is resolved will determine the course of the Internet and the telecommunications industry in general for years to come.

This study will examine the issues from an economic perspective. The RBOCs have presented a number of studies to the FCC in support of their views. The RBOCs have compiled extensive studies in which they examined traffic load increases on the network segment between the public switched network (PSTN) and the ESP. Using the data collected, they conclude that there are a number of network and cost impacts resulting from ISP traffic that are detrimental to the consumer and the future viability of the PSTN. The RBOCs argue these suggest a number of reasons why per-minute access charges should be levied against the ESP/ISP industry; 1) From the RBOC perspective, the phenomenal growth of the Internet is stressing the (PSTN) to the point of imminent failure. They state that Internet usage is increasing the length of call hold times, resulting in congestion across the switching fabric which will ultimately cause a network wide meltdown. In an article from Cable World, Peter Lambert quotes Bell Atlantic spokesman, Eric Rabe, regarding the resultant urgency of the 911 threat; "You may not be able to predict an exact crisis point, but you can project that a choking of the network is inevitable."[1] 2) The RBOCs contend that they are increasingly unable to cover the costs of upgrading the network to accommodate the increase in Internet traffic across the PSTN. 3) The RBOCs further suggest non-Internet users are paying the cost of network upgrades made necessary by increased traffic loads destined for ISPs.

[1] Peter Lambert, "Bell Atlantic study says phone customers cover Internet service providers' costs", Cable World, Sept 2, 1996.

Of all the studies prepared by the various local providers, the one presented by Bell Atlantic is arguably the most detailed and comprehensive and is generally representative of the LEC perspective. The claims made by Bell Atlantic and the data they present to support them seem compelling. Therefore, for the purposes of this paper we will examine the Bell Atlantic study from a critical perspective and see if the conclusions that are drawn are convincing.

II. The Network

To understand the RBOC perspective regarding congestion and cost issues on the PSTN, it is first necessary to understand the basic layout of the network and the various segments where congestion can occur.

Diagram 1.

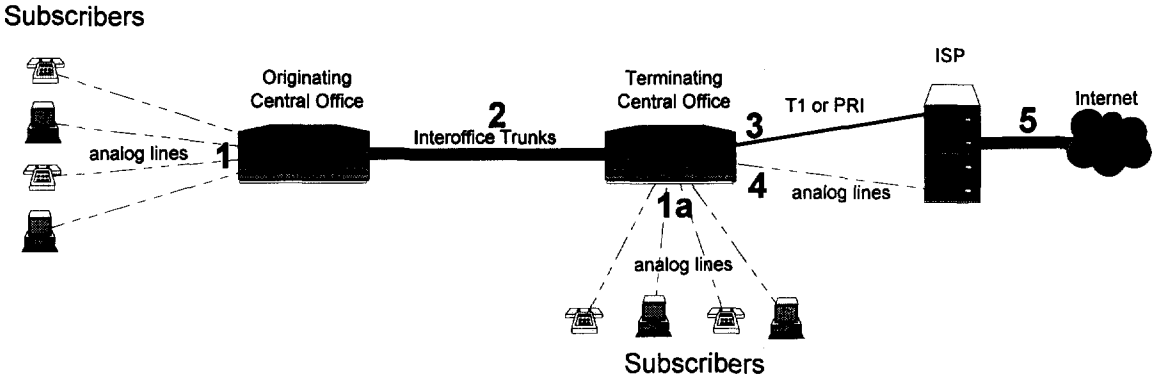

Diagram 1 depicts a simple view of the various network elements involved in call origination and completion. Segment 1 consists of the lines that connect the individual subscriber to their local switch or Central Office (C.O.). Note in segment

1a that the individual subscribers are served by the same C.O. that serves the ISP. Segment 2 shows the high capacity trunks (DS3s) that link the various C.O.s that make up the PSTN. Generally, this segment of the PSTN is made up of high-capacity fiber optic facilities. Segments 3 and 4 are the lines between the C.O. (terminating switch) and the called party. For the purposes of this paper the called party will be the ISP. From the technical perspective there is little difference between terminating a call to an ISP or to another subscriber. Segment 3 depicts a digital T1 or PRI ISDN link. Segment 4 consists of analog lines no different from those in segments 1 and 1a. Segment 5 illustrates the network between the ISP and what is known as the Internet and is completely separate from the PSTN.

Diagram 2 is an expansion of diagram 1. It shows the same segments but includes the various switch components involved in originating and terminating a call. It also allows a better understanding of the RBOC switch studies as they relate to congestion and costs.

Diagram 2.

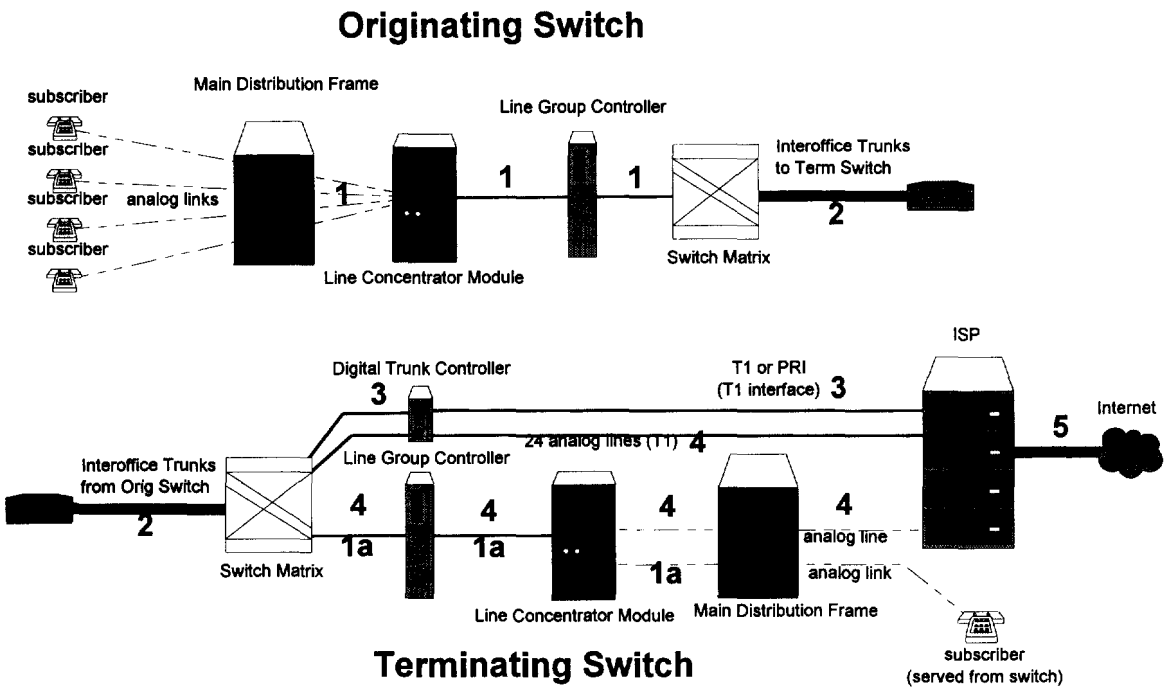

When a subscriber makes a call, their signal passes through a Line Concentrator (LCM) in the originating switch. The LCM is essentially a funnel, which concentrates all of the incoming analog lines onto a smaller group of links to the switch (segment 1). When congestion occurs here it indicates that the LCM does not have enough available paths to connect all of the incoming calls to the switch matrix resulting in a dropped call. The switch matrix decides which set of interoffice trunks to route the call over (segment 2). Congestion at this point is attributed to an insufficient number of paths between the originating switch and the terminating switch. In this event, the calling party would likely receive a fast-busy or reorder tone. At the terminating switch the switch matrix decides whether to route the call over a digital T1 or PRI ISDN trunkgroup (segment 3), or over analog lines (segment 4) to the called party,

depending upon how their interface is arranged. For example if the ISP has digital T1s or PRIs the calls are routed through a digital trunk controller (DTC) to the ISP.

The DTC is inherently non-blocking in that calls coming over the interoffice trunks do not have to contend for paths through the LCM to the ISP. Congestion through this link is caused by an insufficient number of lines between the ISP and the switch. If the ISP has analog lines, calls are routed through the LCM to the ISP's lines. Congestion at this point could be caused by either, too many calls coming into the LCM from various originating C.O.s, or an insufficient number of lines between the ISP and the switch. Once a call has hit the ISP network it is routed over the provider's private data network (segment 5) to the Internet. Any congestion on this segment is internal to the Internet and has no impact on PSTN subscribers.

These diagrams illustrate that traffic congestion can occur at numerous points on the network. Some congestion can be attributed directly to the ESPs while some cannot. It is necessary to identify the point where the bottleneck is occurring before an accurate analysis of costs and impacts can be made.

III. The Bell Atlantic Study

A. An Overview of the Report

Early in 1996, Bell Atlantic submitted a detailed switch study to the FCC, in hopes of assisting the Commission in their consideration with regards to the ESP exemption. They present data supporting a three pronged position: 1) Growth can only be sustained by providing incentives to utilize more efficient emerging

technologies. 2) Growth should not negatively impact non-Internet users. 3) Growth should not tax the PSTN to the point of threatening vital public services like 911. The study is divided into five sections, presenting a comprehensive look at the effects of the ESP exemption from the RBOC perspective. The first section highlights the current environment with regard to ISP access arrangements. Essentially, the LEC contends that ISPs, unlike the Interexchange Carriers (IXCs), do not have to pay anything to have local traffic terminated to their network. There are, of course, a few significant differences in circumstance that make it difficult to justify access fees from ISPs based on the current arrangements with IXCs. Access charges assessed to the interexchange industry were imposed through Universal Service regulation largely to subsidize the LECs' cost of providing essential services to subscribers where the incremental network costs are higher, i.e. rural areas. So far, essential services have constituted voice services and as such it could be justified that the IXCs should incur some of the cost of originating and terminating voice traffic. With the passage of the Telecommunications Act of 1996, the access fee structure and whether it reflects the true costs of providing service has come under a great deal of scrutiny. While the FCC still sees the need to fund Universal Service goals, it is unclear how they will be funded and by whom. Another circumstance that makes justifying access charges to ISPs difficult is that of competition. Currently the LECs are allowed to compete in the Internet arena while they are still not allowed to compete in the provision of long distance services. Paying access fees to an incumbent LEC (ILEC) who is also in direct competition to

carry the same traffic would tilt the playing field in the ILEC's favor. In the absence of regulatory oversight, access fees, while raising costs to the ISPs, could merely constitute a reallocation of revenues within the ILEC.

The second section of the Bell Atlantic report outlines an extensive traffic study of switches that support ISP traffic. The intended purpose of the switch study is to illustrate the cost and network impacts that Internet traffic has on the PSTN. These impacts subsequently support claims of unrecovered costs and the threat to the viability of the network. Referring back to diagram 1, the study encompasses a traffic analysis that is limited to segments 3 and 4. The PRI ISDN lines are non-blocking in that they bypass the line concentrator and pass through the DTC instead (segment 3). Congestion across this segment is indicative of an insufficient number of lines between the ISP and the LEC switch or an insufficient number of paths to aggregate traffic from the various originating C.O.s to the DTC. In any event, congestion will only affect the ISP subscriber and the ISP itself and will not prevent a telephone subscriber from making or receiving a call from anywhere else on the PSTN. Congestion across the analog lines to the ISP is a result of an insufficient number of lines between the ISP and the switch, or an insufficient number of paths between the switching matrix and the main distribution frame (4). Again, this congestion will impact the Internet subscriber and the ISP, not the user of the PSTN in general. The only difference is that the telephone subscribers served by the same switch as the ISP may be impacted. However, this impact can be attributed to the availability of paths from the LCM, which is only indirectly linked to the amount of ISP

traffic and will not affect telephone subscribers network-wide. In the design of the study, no mention is made of monitoring the inter-office facilities (segments 1 & 2 of diagram 1), the vast network between the subscriber and the terminating switch. Due to the nature of the PSTN it would be far more difficult and costly to identify ISP traffic from all other types of traffic traversing the network. Without data on traffic levels of the interoffice and subscriber line segments of the PSTN it is impossible to assess the impacts of congestion attributable to ISPs alone. Yet it is congestion on these segments that would result in the meltdown of the PSTN feared by the RBOCs.

In "Report of Bell Atlantic on Internet Traffic", Bell Atlantic outlines their switch traffic study. In it, they choose to study the traffic loads in a number of end-offices throughout their region that serve ISPs. Included in the study are 9 terminating central offices that serve 7 ISPs. Bell Atlantic monitors a sample of 4887 (50% analog and 50% PRI ISDN) circuits between the terminating switch and the ISP, 24 hours a day, seven days a week, for a period of 4 weeks. As a control or benchmark, Bell Atlantic chose 16 corporate or government users with multi-line huntgroups to illustrate any differences in Internet traffic and similar high volume PBX or other voice type traffic that is terminated to large users. The control sample consists of a total of 777 lines, which is 1/6th that of the ISP study group. The typical high volume PBX trunk group would be terminated to the user over T1 or PRI ISDN facilities which, as in the ISP diagram, are non-blocking. Furthermore, due to the queuing capabilities of PBXs and ACDs, the incoming trunks can be engineered by

the user for close to maximum capacity. To be a true benchmark or point of comparison, the control group should have been of like size, like configuration and like capabilities. Furthermore, choosing specific switches that specifically serve ISPs introduces a non-random element to the study, rendering any subsequent generalizations about the rest of the PSTN questionable.

B. Study Results

Even accepting that the study examines a relevant part of the network, it fails to measure congestion appropriately. The following diagram is a table from the Bell Atlantic report. It reflects the average peak loads imposed on the switches by the various traffic types. The table depicts peak hour and the peak hour utilization and the subsequent peak hour of ISP lines (analog and ISDN) and business multi-line hunt group lines (PBX). As a point of comparison, the table shows peak hour utilization and peak hour for the C.O. as a whole. This data encompasses the switch elements that serve ISPs as well as those that do not. Peak utilization is measured in "hundred call seconds" or CCS per line during the peak hour. For each line in the switch, the maximum utilization is 3600 seconds (60 seconds x 60 minutes) or 36 CCS. As the table indicates, the office average is 3 CCS per line during the 4:00 PM busy hour. It also shows that the peak loads on the 4887 lines in the ISP sample were 26 CCS and 28 CCS respectively with a shift in busy hour to either 11:00 PM or 10:00 PM.

Fig 1. Four-week avg. of peak CCS by segment[2]

Sample Segment	Avg. Peak Hour *CCS	Peak Hour for Segment
ISPs on 1MB (measured business)	26 CCS	11:00 PM
ISPs on PRI (Primary Rate Interface)	28 CCS	10:00 PM
Business Customers with multi-line hunt group	12 CCS	5:00 PM
Office Average (entire central office)	3 CCS	4:00 PM

• *Maximum utilization is 36 CCS per hour

Interpreted simply, the table in fig.1 appears to show that ISP traffic over ISP lines increased the central office average load by between 64% and 69%. While it is indisputable that ISP traffic likely increased the overall load through the switch, the conclusion that ISP traffic disproportionally burdens the C.O. or the PSTN is premature. The increase, which is well within maximum capacity, is reflective of the efficiency of the ISPs' network. ISPs generally provision their access lines at a ratio of lines to subscribers. This ratio usually lies somewhere between 1:10 to 1:20, meaning that between 5% to 10% of an ISP's subscribers can be logged onto the Internet at any given time. With the goal of competitive ISPs to be the minimization

[2] "Report of Bell Atlantic on Internet Traffic". March, 1996. http://www.ba.com/ea/fcc/report.htm.

of marginal costs, it is expected that utilization would be high on the segment between the switch and the ISP. Assuming that the LEC has sufficiently engineered their interoffice facilities (IOFs), there is no reason to suspect that the increased peak utilization of ISP circuits would adversely impact any other telephone subscribers.

The shift in busy hour documented by the Bell Report also indicates additional improvements in efficiency that benefits all users of the PSTN. In a report prepared for the Internet Access Coalition in response to the numerous RBOC studies; "The Effect of Internet Use on the Nation's Telephone Network", the authors demonstrate how increases in peak network usage actually reduce the average per-minute cost for all users. The PSTN is a capital-intensive network involving high up front costs followed by relatively low incremental costs of adding additional users. Determining the per-minute cost of providing service is derived by dividing the busy hour capacity cost of a given resource by the total usage.

Using real-world cost and capacity estimates, Lee L. Selwyn and Joseph W. Laszlo offer the following scenario to illustrate how, even with a shift in busy hour and increased demand, per-minute costs are actually reduced:

> *Given a switch with a busy hour capacity of 500,000 minutes, it can carry a total of 150 million minutes per month. Given that the switch cost equals $250,000 then the per minute cost for the switch comes to .00017; $250,000 ÷150 million minutes. In the case of a shift in the busy hour, an increase in peak demand, and a less than proportionate increase in capacity cost, there is a drop in the per-minute cost of the switch. With a 5% increase in capacity cost and a 10% increase in peak demand, the cost of the switch rises to $262,500 and total minutes increases to 165 million minutes per month. The*

result is a reduction in per-minute cost to .00016; $262,500 165 million minutes. At higher CCS the marginal cost per line is lower.[3]

The Bell Atlantic traffic results revealed a shift in busy hour like that outlined above by Selwyn and Laszlo. This kind of shift in busy hour is not unique to Bell Atlantic. USA Today noted a similar shift from 4-5 PM to 7-11 PM in the PacTel region as well[4]. Such a shift indicates more efficient network utilization rather than an explicit need to implement new network elements to serve ISPs at the expense of all other users. All costs incurred for supporting peak busy hour network usage, in effect, reduce the marginal cost of meeting the off-peak demand, thereby benefiting the RBOC. If the IOFs and switching elements on the PSTN, facilities common to all users, are engineered for peak hour utilization, then the marginal cost of adding off-peak traffic is near zero.

C. Network Impacts

The third and fourth sections of the Bell Atlantic study detail the network and cost impacts imposed by ISP traffic on the Bell Atlantic Network. There are instances in the report where data is missing or incomplete which, if taken into account, tend to paint a very different picture than that presented by the LEC.

---

[3] Lee L. Selwyn & Joseph W. Laszlo, "The Effects of Internet Use on the Nations Telephone Network", Economics and Technology, Inc. Jan 22, 1997.

[4] James Kim, "Net Use Strains Phone Lines", USA Today, Jan 1, 1977. http://www.usatoday.com/life/cyber/tech/ct304.htm

The PSTN is planned, engineered and grown based on a network model known as the "rule of 3"; call hold times of 3 minutes, 3000 Hz per channel and 3 CCS of load per line[5]. This allows the LEC to provision the fewest IOFs and switch elements to sufficiently meet the needs of the users based on average call hold times of 3 minutes. This model has served the LEC well for over 80 years, however the nature of PSTN usage has changed significantly over time. Back then, the PSTN needed no other capabilities but to carry voice traffic across an analog network. Digital communications were a dream and fax, data, video communications and the exploding penetration rate of home PCs were less than a dream. Yet the 80 year-old model remains largely unchanged. Today the network is engineered for traffic loads of around 5 CCS, 4% of the 36 CCS capacity.

According to the Bell Atlantic report increased Internet traffic increases the likelihood of congestion on the facilities between the local terminating switch and the ISP. As we have seen in the network diagrams, insufficient engineering on the part of the ISP or insufficient paths from the IOF to the DTU or LCM will result in congestion on this segment. Any congestion encountered, however, will only impact the Internet subscriber and the ISP to which they are attempting to connect. Congestion across this segment is possibly due to inefficient network management and traffic engineering rather than to factors attributable to ISPs alone. Selwyn and

[5] A. Atai & J. Gordon, "Impacts of Internet Traffic on LEC Networks and Switching Systems", Bellcore, 1996. (Document OOC 1013, Bellcore)

Laszlo cite 2 methods whereby increasing the efficiency with which the switch is engineered can minimize potential blocking in the local terminating switch:

1) Balancing the Line Concentration Module (LCM) with varying proportions of high use ISP analog lines and lines used primarily during non-peak hours, i.e. measured business lines, will make more efficient use of the LCM and allow a higher call completion rate without adding new switching elements. Although unlikely, any increase in the incremental costs associated with re-engineering the switch, over installing unnecessary switch equipment, should of course be borne by the ISPs. The effect being, any incremental costs will have no impact on the non-Internet subscriber.

2) Trunk port connectivity, as provided with PRI ISDN, bypasses the LCM altogether. As noted earlier, PRIs connect to the LEC switch at the Digital Trunk Controller DTC via a trunk port, bypassing the LCM making them non-blocking and non-impacting to other users of the PSTN. This detail in switch configuration is one that the Bell Atlantic study neglects to mention in discussing costs or the potential for congestion.

Any situation involving inefficient switch or network configuration is likely to be relieved by competition and exacerbated by continued monopoly control of the local

loop. Economic theory suggests that competition in the local market would result in increased network efficiency and reduced network costs.

According to Amir Atai, director of Bellcore's Network Traffic and Performance, the lines between the switch and the ISP are engineered like most local access lines for loads of 3 to 6 CCS and are the most common segment for network congestion.[6] This is inconsistent with the RBOC claims that Internet traffic threatens to crash the PSTN because congestion across this link does not affect all users or elements of the PSTN. At the time that America Online, by far and away the largest independent ISP, announced their unlimited access, they had a total of 200,000 lines to service 8 million subscribers. This reflects a line-to-customer ratio of 1:40, about one half that of the average ISP.[7] During the recent AOL crisis, where customers were unable to access AOL's network there were no widespread reports of overwhelming congestion on the PSTN or instances in which calls to 911 emergency services were blocked.

In light of the fact that Bell Atlantic does not include data reflecting increased congestion over their IOFs, one must assume that any congestion noted could not be attributed solely to ISP traffic. This conclusion can be supported by the data found back in fig 1. Despite increases in peak loads across ISP lines, the office

[6] Amir Atai, "Too Much of a Good Thing", Exchange Online, Fall, 1996. http://www.bellcore.com.

average remained at 3 CCS. This indicates that non-ISP traffic remained within expected loads for which the PSTN is engineered. Bell Atlantic consistently mixes the causes and impacts of congestion on IOF facilities with those of ISP lines. This perpetuates the confusion and fear that arises with threats of a network meltdown. In the absence of supporting data, the LEC predicts that loads on the PSTN would double if only 15% of the Bell Atlantic subscribers went online at the same time. Assuming a 50% Internet penetration rate and a 1:10 line to subscriber ratio only 10% of Internet subscribers could possibly be online during the ISP peak.[8] This equates to only 5% of the LEC's subscribers accessing the Internet during the ISP peak. Since the Internet peak does not coincide with the LEC peak, this would not lead to congestion. As mentioned earlier, at the time that AOL began experiencing network overload, they had a modem-to-customer ratio of 1:40. This means that at any given time only 2.5% of their entire subscriber base could be logged onto the network at any given time. Since that time AOL has been working to bring their ratio down to competitive ISP levels which vary between 1:10 and 1:20 lines-to-subscribers.

---

[7] James Love, Director of Consumer Project on Technology, "Comments of CPT on Notice of Proposed Rulemaking, Third Report and Order, and Notice of Inquiry, Jan 29, 1997. http://www.essential.org/cpt/telecom/jan29.html.

[8] In this example, a 50% penetration rate represents a significantly higher rate than the current estimate of 20 to 30 percent. A 1:10 line to subscriber ratio is higher than the average of between 1:15 and 1:20.

In contrast, James Love of the CPT cites statistics that indicate that LECs build their networks to accommodate 14% of their subscribers.[9] In light of this data, if 15% of the LEC's subscribers simultaneously went off-hook, the network would not support it. The network would become congested regardless of whether the subscribers were logging into the Internet or making a voice call. This is evidenced in the increased likelihood of receiving an "all circuits busy" message when attempting to make a phone call to anyone on a major holiday. Furthermore, the number of ISPs served out of a given C.O. and the potential for significant contribution toward congestion is also irrelevant. Due to the competitive nature of the Internet industry, these ISPs would have to divide the total demand. Any excess supply would result in idle trunks, which put no stress on the PSTN. From these examples it can be seen that, provided the LEC sufficiently engineers the interoffice facilities, congestion should not be an issue until the Internet penetration rate reaches parity with that of local telephone penetration.

The only remaining segment where congestion can occur with regard to Internet traffic is on the Internet itself or on the ISPs' Private Data Networks. The impacts of congestion on this segment are limited to Internet subscribers and have no impact on the PSTN whatsoever. The pricing and engineering issues raised in this area are the subject of numerous and intensive economic and engineering studies by many

[9] James Love, Director of Consumer Project on Technology, "Comments of CPT on Notice of Proposed Rulemaking, Third Report and Order, and Notice of Inquiry, Jan 29, 1997. http://www.essential.org/cpt/telecom/jan29.html

of the leading Internet authorities. There is little correlation between congestion on this segment and to the issues of congestion on the PSTN; however, the RBOCs incorporate many of the pricing solutions regarding Internet backbone congestion to support their arguments for lifting the ESP exemption.

D. Cost Impacts

Bell Atlantic concedes that their current cost models, designed for general ratemaking cannot identify and attribute costs specifically to ISPs. Yet they claim not to be covering the costs of providing services to the ISPs. They assert the existence of substantial cross-subsidization by non-Internet users, toward network costs. Through the inclusion of relevant LEC revenues and the proper cost allocation of common network elements, it will be shown that Bell Atlantic not only covers the incremental costs of providing the required network, it makes extraordinary profit.

The Bell Atlantic report goes into detail, outlining the various costs involved in supporting the needs of the ISPs and how these costs are being subsidized largely by non-Internet subscribers. However, the conclusions drawn by the LEC regarding unrecovered costs do not stand up to close scrutiny. It is not so much in the data that Bell Atlantic includes in their calculations of cost coverage, it is more the data that is not included that raises serious questions as to the true motivations behind the RBOCs' request for a lifting of the ESP exemption. The components that make up the PSTN, with the exception of the physical lines into each subscriber's location,

are common facilities. As such the costs of maintaining the PSTN are shared costs, and beyond an incremental cost floor and a stand alone cost ceiling, little can be said about who should pay what.

Due to the lack of true competition in the local telecommunications arena, it is very difficult for regulators and potential competitors to get a realistic indication of the true costs of providing service. For the purposes of this paper we will accept the costs and revenues presented in the Bell Atlantic study. We will also make some educated assumptions regarding costs and revenues not accounted for by the LEC. When combined, these figures will contradict the RBOC claims of unrecovered costs in terminating traffic to ISPs. According to the report, Bell Atlantic estimates a need for a total of 40,000 lines to support the ISPs during 1996, 50% of which are analog lines and 50% PRI ISDN lines. Interoffice trunking is also estimated to increase by 44% during the same period. The cost per subscriber line is calculated at $75/mo for analog lines and $50/mo for PRI lines with corresponding revenues of $17/mo for each analog and PRI line. With these numbers we can derive the LEC version of their cost-to-revenue function in figure 2.