COPYRIGHT © 1996 HENDERSON COMMUNICATIONS CORPORATION.
PHOTO REPRODUCTION FOR NONCOMMERCIAL USE IS PERMITTED WITHOUT PAYMENT OF ROYALTY PROVIDED THAT EACH REPRODUCTION IS DONE WITHOUT ALTERATION AND THAT THE JOURNAL REFERENCE AND COPYRIGHT NOTICE ARE INCLUDED ON THE FIRST PAGE.

TSB-37A (17-24): Impairment Combination Table

Impairments	Units	Line 21a	Line 21b	Line 21c	Line 22a	Line 22b	Line 22c
Network: (EO to EO) Parameters							
Connection Type - Score	%	5.0	5.0	5.0	1.0	1.0	1.0
Combination - Score	%	0.35	0.35	4.3	0.05	0.05	0.9
1. Attenuation Distortion		Cable-3	Cable-2	Cable-1	Cable-3	Cable-2	Cable-1
2. Envelope Delay Distortion		None	None	None	None	None	None
3. 1 kHz Loss	dB	8.0	6.0	6.0	8.0	6.0	6.0
4. Noise							
4a. Background Noise	dBm	22	22	22	22	22	22
4b. Tone to Noise Ratio	dB	N/A	N/A	N/A	N/A	N/A	N/A
5. Phase Jitter							
5a. P-P deviation	Deg.	None	None	None	None	None	None
5b. Frequency	Hz	None	None	None	None	None	None
6. IMD- (4Tone)							
6a. 2nd Order (R2)	dB	60	60	60	43	50	55
6b. 3rd Order (R3)	dB	58	58	58	44	51	56
7. Frequency Offset							
7a. FO (A to B)	Hz	None	None	None	None	None	None
7b. FO (B to A)	Hz	None	None	None	None	None	None
8. PCM (64 kbit/s)							
8a. Tandem Links	No	None	None	None	1	1	1
8b. Robbed Bit Signaling		No	No	No	No	No	No
8c. Robbed Bit Signaling Location	Link No.	—	—		—	—	
9. ADPCM							
9a. Type		None	None	None	None	None	None
9b. Signaling rate	kbit/s	None	None	None	None	None	None
9c. ADPCM Location		None	None	None	None	None	None
10. Echo							
10a. Round Trip Delay	ms	35	35	35	80	80	80
10b. Trans Hybrid Loss (A)	dB	12	16	20	12	16	20
10c. Trans Hybrid Loss (B)	dB	12	16	20	12	16	20

COPYRIGHT © 1996 HENDERSON COMMUNICATIONS CORPORATION.
PHOTO REPRODUCTION FOR NONCOMMERCIAL USE IS PERMITTED WITHOUT PAYMENT OF ROYALTY PROVIDED THAT EACH REPRODUCTION IS DONE WITHOUT ALTERATION AND THAT THE JOURNAL REFERENCE AND COPYRIGHT NOTICE ARE INCLUDED ON THE FIRST PAGE.

TSB-37A (17-24): Impairment Combination Table

Impairments	Units	Line 23a	Line 23b	Line 23c	Line 24a	Line 24b	Line 24c
Network: (EO to EO) Parameters							
Connection Type - Score	%	2.0	2.0	2.0	2.0	2.0	2.0
Combination - Score	%	0.15	0.15	1.7	0.15	0.15	1.7
1. Attenuation Distortion		NTT-5	NTT-4	NTT-1	NTT-4	NTT-3	NTT-1
2. Envelope Delay Distortion		NTT-1	NTT-1	NTT-1	NTT-1	NTT-1	NTT-1
3. 1 kHz Loss	dB	9.0	8.0	6.0	8.0	6.0	6.0
4. Noise							
4a. Background Noise	dBrn	N/A	N/A	N/A	N/A	N/A	N/A
4b. Tone to Noise Ratio	dB	30	33	36	33	36	39
5. Phase Jitter							
5a. P-P deviation	Deg.	3	3	3	3	3	3
5b. Frequency	Hz	60	60	60	60	60	60
6. IMD- (4Tone)							
6a. 2nd Order (R2)	dB	43	46	51	43	46	51
6b. 3rd Order (R3)	dB	44	47	53	44	47	53
7. Frequency Offset							
7a. FO (A to B)	Hz	+0.2	+0.2	+0.2	None	None	None
7b. FO (B to A)	Hz	-0.2	-0.2	-0.2	None	None	None
8. PCM (64 kbit/s)							
8a. Tandem Links	No	None	None	None	1	1	1
8b. Robbed Bit Signaling		No	No	No	No	No	No
8c. Robbed Bit Signaling Location	Link No.						
9. ADPCM							
9a. Type		None	None	None	None	None	None
9b. Signaling rate	kbit/s	None	None	None	None	None	None
9c. ADPCM Location		None	None	None	None	None	None
10. Echo							
10a. Round Trip Delay	ms	35	35	35	80	80	80
10b. Trans Hybrid Loss (A)	dB	16	20	22	16	20	22
10c. Trans Hybrid Loss (B)	dB	16	20	22	16	20	22

HENDERSON LABORATORIES CORPORATION

Insight Test Standards for:
Hatfield Associates - Job #-0933

Appendix B

Test Conditions Covered:
Error Detection/Compression & Data Compression

COPYRIGHT © 1996 HENDERSON COMMUNICATIONS CORPORATION.
PHOTO REPRODUCTION FOR NONCOMMERCIAL USE IS PERMITTED WITHOUT PAYMENT OF ROYALTY PROVIDED THAT EACH REPRODUCTION IS DONE WITHOUT ALTERATION AND THAT THE JOURNAL REFERENCE AND COPYRIGHT NOTICE ARE INCLUDED ON THE FIRST PAGE.

TABLE OF CONTENTS

INTRODUCTION 4

PSTN MODEM PERFORMANCE EVALUATION METHOD 5

DEFINITIONS 6

- Asynchronous 6
- Bit-error ratio (BER) 6
- Block-error ratio (BLER) 6
- Buffered mode 6
- Character 7
- Compression ratio 7
- Dictionary size 7
- Direct mode 7
- DTE 7
- Fox message 7
- Half/full duplex 7
- Maximum string length 8
- One way/two way transfer 8
- RTS/CTS flow control 8
- Synchronous 9
- Throughput 9
- Unidirectional/bidirectional impairments 9

SETUP AND CALIBRATION FOR THROUGHPUT TESTING 10

- DTE characteristics 10
- Equipment list 11
- DTE configuration 11
- Modem configuration 11
- Test setup description 14

THROUGHPUT PERFORMANCE TESTS: ASYNCHRONOUS 15

- Best Case Throughput 16
- Connect Rate and Throughput vs. SNR (Auto Rate Connectivity) 18

COPYRIGHT © 1996 HENDERSON COMMUNICATIONS CORPORATION.
PHOTO REPRODUCTION FOR NONCOMMERCIAL USE IS PERMITTED WITHOUT PAYMENT OF ROYALTY PROVIDED THAT EACH REPRODUCTION IS DONE WITHOUT ALTERATION AND THAT THE JOURNAL REFERENCE AND COPYRIGHT NOTICE ARE INCLUDED ON THE FIRST PAGE.

STANDARD DATA FILE CHARACTERISTICS 21
Characteristics of Data Files 22
Test file names and sizes: 22
Description of each test file type: 23
MNP 23
V.42*bis* 24
FILE TRANSFER PROTOCOLS 27
XMODEM 27
XMODEM-CRC 27
XMODEM-1K 27
YMODEM 27
YMODEM-G 28
ZMODEM 28
KERMIT 28

COPYRIGHT © 1996 HENDERSON COMMUNICATIONS CORPORATION.
PHOTO REPRODUCTION FOR NONCOMMERCIAL USE IS PERMITTED WITHOUT PAYMENT OF ROYALTY PROVIDED THAT EACH REPRODUCTION IS DONE WITHOUT ALTERATION AND THAT THE JOURNAL REFERENCE AND COPYRIGHT NOTICE ARE INCLUDED ON THE FIRST PAGE.

INTRODUCTION

Traditional performance evaluation methodology generally consisted of Bit or Block-error ratio versus a signal-to-noise (SNR) level curve. Current data communications applications are far more complex, thereby demanding far more sophisticated performance evaluation techniques.

A lack of consistent test procedures and results interpretation criteria led to modem performance evaluations with widely varying and often inaccurate comparisons. An attempt to resolve this problem by TIA TR-30.3 resulted in established uniform accepted test procedures practices as noted herein.

COPYRIGHT © 1996 HENDERSON COMMUNICATIONS CORPORATION.
PHOTO REPRODUCTION FOR NONCOMMERCIAL USE IS PERMITTED WITHOUT PAYMENT OF ROYALTY PROVIDED THAT EACH REPRODUCTION IS DONE WITHOUT ALTERATION AND THAT THE JOURNAL REFERENCE AND COPYRIGHT NOTICE ARE INCLUDED ON THE FIRST PAGE.

PSTN Modem Performance Evaluation Method

In this appendix we present a suite of standard evaluation techniques for performance testing of voice band modems and guidelines for interpreting the results. Testing performance based on the concepts addressed here was carried out on lines referenced to EIA/TIA Application note, *Public Switched Telephone Network Transmission Simulation for Evaluating Modem Performance*, TSB-37A / 38 issued 1994. TSB-37A specifies a suite of impairment combinations designed to simulate the conditions of the PSTN over which modems operate.

The tests described in this application were designed with the intent that the pair of modems under test are the same model and revision from the same manufacturer. Under specific conditions (i.e. specialized modems and PCMCIA modems) the test are conducted using modems of different model or manufacturer to support specific applications.

These tests uses the line impairment combinations specified in EIA/TIA TSB-37A to simulate PSTN conditions adversely affecting modem performance. We acknowledge that, due to the rapid transition of the network from analog to digital, the line impairment combinations specified in TSB-37A may not fully represent today's PSTN. Specifically as regards PCM and ADPCM. As a result, it would be inappropriate to use this portion of the testing as the sole test for modem evaluations at DCE line rates greater than 14.4 kbit/s.

The tests described in this document focus exclusively on throughput performance in the presence of simulated line impairments. These tests do not encompass all of the tests recommended by HCC Labs (and available from HCC Labs) which might be applied to voice band modems to evaluate them for specific applications.

COPYRIGHT © 1996 HENDERSON COMMUNICATIONS CORPORATION.
PHOTO REPRODUCTION FOR NONCOMMERCIAL USE IS PERMITTED WITHOUT PAYMENT OF ROYALTY PROVIDED THAT EACH REPRODUCTION IS DONE WITHOUT ALTERATION AND THAT THE JOURNAL REFERENCE AND COPYRIGHT NOTICE ARE INCLUDED ON THE FIRST PAGE.

DEFINITIONS

For the purposes of this application, the following definitions apply. These definitions are simply advisory and not intended to be complete.

ASYNCHRONOUS

Asynchronous transmission is the transmission of characters (over a DTE-to-modem interface) at irregular times without a bit clock signal being sent at the same time. Data is normally sent in the form of start-stop formatted characters. The receiving device determines bit and character synchronization from the beginning of the start element of each character.

BIT-ERROR RATIO (BER)

Bit-error ratio is the measured ratio of erred bits to total bits received at a DTE-to-modem interface.

BLOCK-ERROR RATIO (BLER)

Block-error ratio is the measured ratio of erred blocks to total blocks received at a DTE-to-modem interface.

BUFFERED MODE

Modems operating with DTE speeds in excess of the DCE rate use internal buffer caches of RAM to store data on a temporary basis. Buffered Mode is sometimes referred to as "Normal" mode. All asynchronous testing is performed in this mode, whenever possible.

COPYRIGHT © 1996 HENDERSON COMMUNICATIONS CORPORATION.
PHOTO REPRODUCTION FOR NONCOMMERCIAL USE IS PERMITTED WITHOUT PAYMENT OF ROYALTY PROVIDED THAT EACH REPRODUCTION IS DONE WITHOUT ALTERATION AND THAT THE JOURNAL REFERENCE AND COPYRIGHT NOTICE ARE INCLUDED ON THE FIRST PAGE.

CHARACTER

A character is a group of bits that begins with a start element and ends with one or more stop elements (used for asynchronous transfers).

COMPRESSION RATIO

Compression Ratio is the ratio of the size of the original file to the size of the compressed file. A modem's Compression Ratio is also the ratio of the file transfer rate, in bits per second, to the DCE speed of the modem.

DICTIONARY SIZE

V.42*bis* operation entails the use of sending and receiving dictionaries. These are lists of character strings, words, for which code words are assigned. The standard specifies 256 codes which are associated with one-character strings, and three codes which are reserved for control functions. The balance of the dictionary entries are associated with multiple-character strings previously encountered during the current connection. The term "dictionary size" refers to the maximum number of code words contained in a given product's dictionary. The minimum (and default) value 512 words.

DIRECT MODE

Modems operating with Error-Correction and Data Compression protocols and Data Buffering turned off are operating in Direct Data Mode.

DTE

An acronym for Data Terminal Equipment, the equipment comprising the data source(s) and the data sink(s). A DTE that complies with the throughput testing specified in this application note has two ports (DTE-to-modem interfaces).

FOX MESSAGE

The 50 character message "THE QUICK BROWN FOX JUMPED OVER THE LAZY DOGS BACK", with each character being in the ASCII character set. The characters <CR> and <LF>, which represent the ASCII codes for carriage return and line feed, respectively, may follow the message.

HALF/FULL DUPLEX

Half duplex refers to the modem's ability to send data and receive data, but not both at the same time.

COPYRIGHT © 1996 HENDERSON COMMUNICATIONS CORPORATION.
PHOTO REPRODUCTION FOR NONCOMMERCIAL USE IS PERMITTED WITHOUT PAYMENT OF ROYALTY PROVIDED THAT EACH REPRODUCTION IS DONE WITHOUT ALTERATION AND THAT THE JOURNAL REFERENCE AND COPYRIGHT NOTICE ARE INCLUDED ON THE FIRST PAGE.

Full duplex refers to the modem's ability to send data and receive data simultaneously.

MAXIMUM STRING LENGTH

The V.42*bis* Recommendation for data compression specifies the use of code words which are sent to represent strings of characters. Compression occurs because the code words require fewer bits than the character strings they represent. The number of characters in a string is the string length. The maximum string length is the largest number of characters allowed in a string and is negotiated during call setup. The minimum (and default) value is 6 characters. A typical maximum string length is 16 characters.

ONE WAY/TWO WAY TRANSFER

One-way transfer means a file is sent in one direction during a throughput test.

Two-way transfer means files are sent in both directions at the same time during a throughput test.

RTS/CTS FLOW CONTROL

A flow control method used over a DTE-to-modem interface in which the EIA-232 Ready To Send, RTS, (circuit 105) and Clear to Send, CTS, (circuit 106) are used by the DTE and modem, respectively, to indicate readiness to accept additional data.

When the DTE is ready to accept data, it holds RTS in the ON condition. When the DTE is temporarily unable to accept additional data, it holds RTS in the OFF condition; the modem retains data in its internal buffers until RTS is turned back ON. Note that for accurate throughput measurements during the tests described in this document, the DTE must be fast enough that it never actually turns RTS to the OFF condition when receiving data at full speed at any of the supported data rates.

When the modem is ready to accept data, it holds CTS in the ON condition. When the modem is temporarily unable to accept additional data (e.g., during retransmission of data in the V.42 protocol, or because its buffers have filled due to the data being insufficiently compressible to account for the differences between the DTE-to- modem interface data rate and the modem-to-line interface data rate), it holds CTS in the OFF condition; the DTE suspends transmission of data until CTS returns to the ON condition. Note that to avoid data loss, the DTE must cease transmission of additional data after an ON-to-OFF transition on CTS as

COPYRIGHT © 1996 HENDERSON COMMUNICATIONS CORPORATION.
PHOTO REPRODUCTION FOR NONCOMMERCIAL USE IS PERMITTED WITHOUT PAYMENT OF ROYALTY PROVIDED THAT EACH REPRODUCTION IS DONE WITHOUT ALTERATION AND THAT THE JOURNAL REFERENCE AND COPYRIGHT NOTICE ARE INCLUDED ON THE FIRST PAGE.

quickly as possible, but in any case fast enough to avoid overflowing the DCE's transmission buffer. Also note that for accurate throughput measurements during the tests described in this document, the DTE must resume transmission of data within one millisecond or one character time at the data rate in use (whichever is longer) after an OFF-to-ON transition on CTS.

SYNCHRONOUS

Synchronous transmission is the transmission of bits or other signal elements with accompanying signal element timing information . For these tests the timing clock is provided as a separate interface signal by the modem.

THROUGHPUT

Throughput is defined as the effective rate of transfer of data from a DTE source to a DTE sink, and only applies when the DTE-to-modem interfaces are in asynchronous mode. Bytes of data are converted to/from 10 bit characters for transmission across the DTE-to-modem interfaces.

Throughput can be expressed in various units of measure. In this application, throughput is expressed in bits per second (b/s) or as a multiplier of the DCE connect rate. Throughput is measured at the DTE-to-modem interface and is equal to the number of bits transmitted divided by the elapsed time in seconds. Elapsed time is measured from the time the first character is transmitted from the DTE source until the last character is received by the DTE sink.

UNIDIRECTIONAL/BIDIRECTIONAL IMPAIRMENTS

TSB-37 specified transmission impairments that are simulated in one direction of transmission path (usually the A to B direction) are referred to as **unidirectional impairments**.

TSB-37 specified transmission impairments that are simulated in both directions of transmission path are referred to as **bidirectional impairments**.

COPYRIGHT © 1996 HENDERSON COMMUNICATIONS CORPORATION.
PHOTO REPRODUCTION FOR NONCOMMERCIAL USE IS PERMITTED WITHOUT PAYMENT OF ROYALTY PROVIDED THAT EACH REPRODUCTION IS DONE WITHOUT ALTERATION AND THAT THE JOURNAL REFERENCE AND COPYRIGHT NOTICE ARE INCLUDED ON THE FIRST PAGE.

SETUP AND CALIBRATION FOR THROUGHPUT TESTING

DTE CHARACTERISTICS

For comparative testing of modems, HCC's DTE supports testing at the highest DTE-to-modem interface rate that the modems are capable of accepting. For user application testing, the DTE is set to the maximum rate for the application software package.

For **asynchronous operation**, HCC's DTE supports a 10-bit character format consisting of one Start element , eight data bits, and one Stop element . No parity bit is included in this format. This is represented by the common shorthand "8N1".

For **asynchronous operation**, HCC's DTE supports CTS flow control.

To avoid data loss, the DTE will cease transmission of additional data after an ON-to-OFF transition on CTS as quickly as possible, but in any case fast enough to avoid overflowing the modem's transmission buffer. For accurate throughput measurements during the tests described in this document, the DTE will resume transmission of data within one millisecond or one character time at the data rate in use (whichever is longer) after an OFF-to-ON transition on CTS. Further, the DTE is fast enough that it never actually turns RTS to the OFF condition when receiving data at full speed at any of the supported data rates.

The DTE, via the "How Fast" software, monitors received data to verify that it is free of errors. If errors are detected, the DTE indicates an error count. The transfer is considered unsuccessful if the count exceeds 10 errors per transmission.

COPYRIGHT © 1996 HENDERSON COMMUNICATIONS CORPORATION.
PHOTO REPRODUCTION FOR NONCOMMERCIAL USE IS PERMITTED WITHOUT PAYMENT OF ROYALTY PROVIDED THAT EACH REPRODUCTION IS DONE WITHOUT ALTERATION AND THAT THE JOURNAL REFERENCE AND COPYRIGHT NOTICE ARE INCLUDED ON THE FIRST PAGE.

EQUIPMENT LIST

To perform the throughput tests described in this application, the following equipment was utilized:

- a reference modem
- the modem(s) under test
- 2 DTE ports compliant with the specifications in this appendix
- standard TSB-38 throughput testing files
- a Consultronics or TAS TSB-37A compliant PSTN Transmission Simulator

DTE CONFIGURATION

Unless otherwise noted, the DTE was configured as follows:

- CTS flow control enabled, XON/XOFF flow control disabled.
- Each DTE port configured to transfer data at the highest data rate possible for each connected modem.
- Standard character format (8N1).

MODEM CONFIGURATION

Unless otherwise noted, the modems were configured as delivered from the factory with the following modifications (if not factory default):

- CTS flow control enabled, XON/XOFF flow control disabled.
- The DTE port was configured to transfer data at the highest data rate supported by each modem (port rate adjust: disabled , i.e. DTE-to-modem rate did not follow connected modem-to-modem line rate).
- Standard character format (8N1).
- Data Buffer enabled (when testing this aspect of modem operation)

COPYRIGHT © 1996 HENDERSON COMMUNICATIONS CORPORATION.
PHOTO REPRODUCTION FOR NONCOMMERCIAL USE IS PERMITTED WITHOUT PAYMENT OF ROYALTY PROVIDED THAT EACH REPRODUCTION IS DONE WITHOUT ALTERATION AND THAT THE JOURNAL REFERENCE AND COPYRIGHT NOTICE ARE INCLUDED ON THE FIRST PAGE.

- Error control enabled (when testing this aspect of modem operation)
- Data Compression enabled (when testing this aspect of modem operation)
- Modulation fallback, fall-forward enabled
- Retrain enabled.
- DTR (Circuit 108), DSR (Circuit 107) and DCD (Circuit 109) are strapped for normal operation.

For all modem comparison tests, the following information was recorded:

- Modem configuration setting ('AT' commands, DIP switches, etc.)
- DTE-to-modem and modem-to-modem line interface rates at connect time
- Modem model and firmware version (via 'ATIn' command responses)

DTE throughput verification

DTE data transmission and reception times:

a) Are measured using a clock source accurate to within ±0.01% (100 parts per million) of its nominal rate over each throughput test.

b) Are recorded in units of 100 microseconds.

c) Are used and reported in milliseconds by rounding the recorded times to the nearest millisecond.

COPYRIGHT © 1996 HENDERSON COMMUNICATIONS CORPORATION.
PHOTO REPRODUCTION FOR NONCOMMERCIAL USE IS PERMITTED WITHOUT PAYMENT OF ROYALTY PROVIDED THAT EACH REPRODUCTION IS DONE WITHOUT ALTERATION AND THAT THE JOURNAL REFERENCE AND COPYRIGHT NOTICE ARE INCLUDED ON THE FIRST PAGE.

The tests described in this application require that:

a) The DTE continuously transmits data to the modem except when the modem controls the flow of data from the DTE.

b) The DTE not control the flow of data transmitted from the modem at any time.

c) The DTE transmit and receive data within ±0.05% of the selected DTE-to-modem interface rate.

The DTE was tested to determine if it is capable of transmitting and receiving data within ±0.05% of each DTE-to-modem interface rate to be used. To verify this capability:

a) HCC connected a null modem cable between the DTE ports;

b) HCC performed a Two-way transfer using file 4.

DTE performance limits

Interface Rate (bit/s)	Minimum Transfer Time (seconds)	Maximum Transfer Time (seconds)
115200	11.372	11.383
57600	22.744	22.767
38400	34.116	34.150
19200	68.233	68.301
14400	90.977	91.068
9600	136.465	136.602
4800	272.930	273.203
2400	545.860	546.406
1200	1091.721	1092.813

COPYRIGHT © 1996 HENDERSON COMMUNICATIONS CORPORATION.
PHOTO REPRODUCTION FOR NONCOMMERCIAL USE IS PERMITTED WITHOUT PAYMENT OF ROYALTY PROVIDED THAT EACH REPRODUCTION IS DONE WITHOUT ALTERATION AND THAT THE JOURNAL REFERENCE AND COPYRIGHT NOTICE ARE INCLUDED ON THE FIRST PAGE.

TEST SETUP DESCRIPTION

The throughput testing configuration consists of a high speed compliant dual-port DTE (PC), a reference modem, the modem under test and a TSB-37A compliant PSTN Transmission Simulator (consisting of an impairment generator, a 6.1 dB pad, and a Local Loop Simulator). This configuration is illustrated in the Figure below.

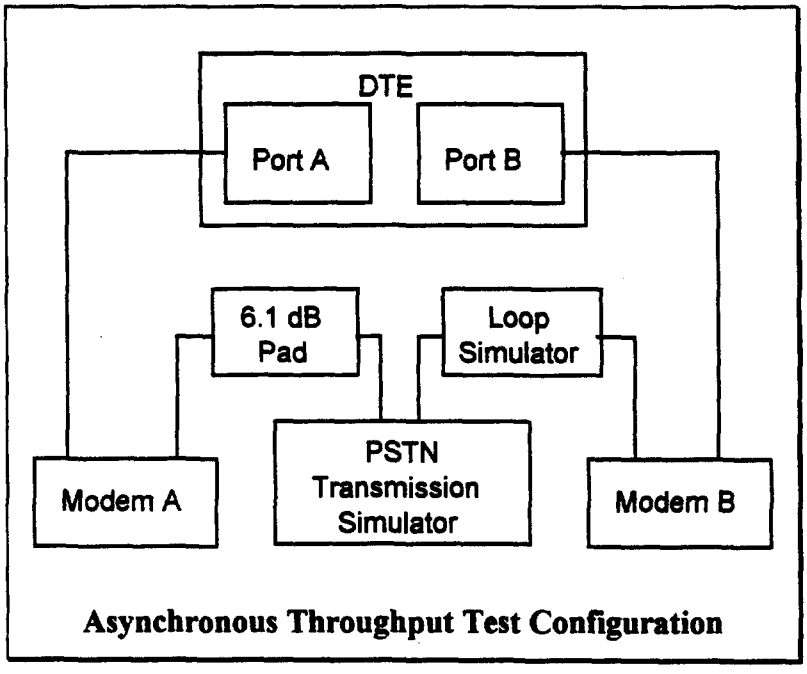

Asynchronous Throughput Test Configuration

COPYRIGHT © 1996 HENDERSON COMMUNICATIONS CORPORATION.
PHOTO REPRODUCTION FOR NONCOMMERCIAL USE IS PERMITTED WITHOUT PAYMENT OF ROYALTY PROVIDED THAT EACH REPRODUCTION IS DONE WITHOUT ALTERATION AND THAT THE JOURNAL REFERENCE AND COPYRIGHT NOTICE ARE INCLUDED ON THE FIRST PAGE.

THROUGHPUT PERFORMANCE TESTS: ASYNCHRONOUS

This section describes the series of asynchronous tests used by HCC to accurately characterize a modem's ability to transfer different types of data under various line-conditions. No single test is comprehensive enough to determine how a modem will perform in all applications. This series of tests permits the gathering of sufficient throughput related data on a modem (or a pair of modems) to determine its strengths and weaknesses. Individual users can decide which of the tested factors are important for their particular application(s).

COPYRIGHT © 1996 HENDERSON COMMUNICATIONS CORPORATION.
PHOTO REPRODUCTION FOR NONCOMMERCIAL USE IS PERMITTED WITHOUT PAYMENT OF ROYALTY PROVIDED THAT EACH REPRODUCTION IS DONE WITHOUT ALTERATION AND THAT THE JOURNAL REFERENCE AND COPYRIGHT NOTICE ARE INCLUDED ON THE FIRST PAGE.

BEST CASE THROUGHPUT

The purpose of this series of tests is to measure a modem's maximum data compression capabilities under less than ideal line conditions. Five different data files, representative of the range of data types transferred in common applications, are used in the test suites. The ideal or "reference" compressibility for each of the files has been determined and is presented in at the end of this section. By comparing the modems' measured throughput for a given file with the reference throughput for that same file, modem effectiveness in compressing data can be determined.

NOTE - Caution must be practiced when determining the reference throughput. It will vary dependent upon the V.42bis dictionary size and maximum string length used by the modem. For that reason these tests are performed under modem "default" or "factory default" conditions. HCC, when performing these tests, considers that the optimum test setup is one that emulates the most probable user operating conditions.

The most common types of data transfers are typically one-way (e.g., file uploads and downloads). Two-way file transfers, however, are still quite uncommon. Simulating these two different modes of operation would require throughput measurement using both one-way and two-way transfers for all combinations of the five data files. The return on the investment required to perform such extensive testing is not justified in the marketplace. Nonetheless, we acknowledge that when a modem is performing a one-way transfer, it only has to apply its processing power to either compressing or decompressing the data. Two-way file transfer dictates that the modem must share its processing power between compressing transmitted data and decompressing receive data, a much more challenging task for the modem.

The best case throughput tests provide a benchmark of the maximum achievable compression capabilities of the modems under nearly ideal test conditions. Other tests detailed in this section determine the effects of increasingly adverse line conditions on throughput.

COPYRIGHT © 1996 HENDERSON COMMUNICATIONS CORPORATION.
PHOTO REPRODUCTION FOR NONCOMMERCIAL USE IS PERMITTED WITHOUT PAYMENT OF ROYALTY PROVIDED THAT EACH REPRODUCTION IS DONE WITHOUT ALTERATION AND THAT THE JOURNAL REFERENCE AND COPYRIGHT NOTICE ARE INCLUDED ON THE FIRST PAGE.

In performing the Best Case Throughput test, file transfers were executed as specified in the test procedure below.

1. The DTE and modems were configured as specified above.
2. The modems were connected to the PSTN Transmission Simulator.
3. The PSTN Transmission Simulator was configured for TSB-37 line 16 (with no impulse noise).
4. We established a dial-up data connection. After both modems issued indications of connection to the DTE, we began a one-way transfer of the selected test file.
5. The file transfer was repeated for a total of 5 times.
6. Upon completion of the transfer(s), the throughput was recorded and the link was disconnected.
7. Steps 4 through 6 were repeated with each of the remaining standardized files. Two-way file transfer testing (when included) requires executing the above steps for all the file combinations listed on the next page.

COPYRIGHT © 1996 HENDERSON COMMUNICATIONS CORPORATION.
PHOTO REPRODUCTION FOR NONCOMMERCIAL USE IS PERMITTED WITHOUT PAYMENT OF ROYALTY PROVIDED THAT EACH REPRODUCTION IS DONE WITHOUT ALTERATION AND THAT THE JOURNAL REFERENCE AND COPYRIGHT NOTICE ARE INCLUDED ON THE FIRST PAGE.

Modem A to B	Modem B to A
1	1
1	2
1	3
1	4
1	5
2	1
2	2
2	3
2	4
2	5
3	1
3	2
3	3
3	4
3	5
4	1
4	2
4	3
4	4
4	5
5	1
5	2
5	3
5	4
5	5

CONNECT RATE AND THROUGHPUT VS. SNR (AUTO RATE CONNECTIVITY)

COPYRIGHT © 1996 HENDERSON COMMUNICATIONS CORPORATION.
PHOTO REPRODUCTION FOR NONCOMMERCIAL USE IS PERMITTED WITHOUT PAYMENT OF ROYALTY PROVIDED THAT EACH REPRODUCTION IS DONE WITHOUT ALTERATION AND THAT THE JOURNAL REFERENCE AND COPYRIGHT NOTICE ARE INCLUDED ON THE FIRST PAGE.

The Best Case Throughput measurements described earlier determined the maximum achievable throughput for the modem under test. The purpose of this section is to determine the amount of throughput degradation experienced when files are transferred over additionally impaired lines.

COPYRIGHT © 1996 HENDERSON COMMUNICATIONS CORPORATION.
PHOTO REPRODUCTION FOR NONCOMMERCIAL USE IS PERMITTED WITHOUT PAYMENT OF ROYALTY PROVIDED THAT EACH REPRODUCTION IS DONE WITHOUT ALTERATION AND THAT THE JOURNAL REFERENCE AND COPYRIGHT NOTICE ARE INCLUDED ON THE FIRST PAGE.

This pair of tests recorded the connected data rate and measured modem throughput of the modem under test over TSB-37 line 16 at two specific SNR settings

HCC performed these tests using the following procedure:

1. The DTE and modems were configured as specified above.

2. The modems were connected to the PSTN Transmission Simulator.

3. The PSTN Transmission Simulator was configured for TSB-37 line 16 (with no impulse noise). Line noise was increased to an SNR level determined by the BERT tests to be the point at which the modem switched to the next lowest DCE rate.

4. We established a dial-up data connection. After both modems issued indications of connection to the DTE, we began a one-way transfer of the selected test file.

5. The file transfer was repeated for a total of 5 times.

6. Upon completion of the transfer(s), the throughput was recorded and the link was disconnected.

7. Steps 4 through 6 were repeated with each of the remaining standardized files.

8. Steps 3 through 7 were repeated with the line noise increased to an SNR level determined by the BERT tests to be the point at which the modem began experiencing errors or error caused retransmissions[1].

[1] In the case of higher level modem modulation schemes some tested products may not display a measurable error performance before switching speeds during BER tests. When this occurs, HCC will use the SNR of an additional DCE speed lower to perform the third set of throughput measurements.

COPYRIGHT © 1996 HENDERSON COMMUNICATIONS CORPORATION.
PHOTO REPRODUCTION FOR NONCOMMERCIAL USE IS PERMITTED WITHOUT PAYMENT OF ROYALTY PROVIDED THAT EACH REPRODUCTION IS DONE WITHOUT ALTERATION AND THAT THE JOURNAL REFERENCE AND COPYRIGHT NOTICE ARE INCLUDED ON THE FIRST PAGE.

STANDARD DATA FILE CHARACTERISTICS

Five standardized data files were used for throughput testing. These files were chosen by the TIA TR30.3 working group to simulate typical data transfer applications. These files are presented in this section, along with associated descriptions.

COPYRIGHT © 1996 HENDERSON COMMUNICATIONS CORPORATION.
PHOTO REPRODUCTION FOR NONCOMMERCIAL USE IS PERMITTED WITHOUT PAYMENT OF ROYALTY PROVIDED THAT EACH REPRODUCTION IS DONE WITHOUT ALTERATION AND THAT THE JOURNAL REFERENCE AND COPYRIGHT NOTICE ARE INCLUDED ON THE FIRST PAGE.

CHARACTERISTICS OF DATA FILES

A diskette is provided with the TIA TSB38 document containing the data files which are used for throughput tests. These files are each 32768 bytes in length. The 1.TST file was chosen for use in Throughput vs. Network Conditions testing. This file was chosen for that procedure so that if data compression was inadvertently left on, the higher throughput results will alert the test engineer to that fact. Five repetitions of files was chosen to provide a reasonable amount of data transfer. The selected test files represent a wide range of different data and application types. The table below indicates the names of each file along with its file size.

Test file names and sizes:

Base File Name	Size (bytes)	Representative of file type:	Cyclic Redundancy Check -32
1.TST	32768	NUMBERS ONLY[2]	6fe822b6
2.TST	32768	WORD-PROCESSING[3]	573f34ee
3.TST	32768	EXECUTABLE [4]	61ed42b0
4.TST	32768	COMPRESSED[5]	a2d5056b
5.TST	32768	MIXED3[6]	43ad4977
SPACE.TST	32768	SPACES[7]	

2 Taken from a vector-graphic drawing description.

3 The 2.TST file is taken from a WordPerfect file.

4 The 3.TST file is a portion of a program for the Intel 8086 family of computers.

5 The 4.TST file is taken from a 64-bit random-number generator, and its characteristics are typical for file compressed with Ziv-Lempel algorithms.

6 The 5.TST file is a mixture of different types of files combined into one; it is derived from the file used to examine proposed V.42*bis* algorithms.

7 The SPACE.TST file is a file composed of uninterrupted "space" characters; it's purpose is to examine V.42*bis* algorithm implementations. This is not a TIA standard, it was created by Henderson Labs.

COPYRIGHT © 1996 HENDERSON COMMUNICATIONS CORPORATION.
PHOTO REPRODUCTION FOR NONCOMMERCIAL USE IS PERMITTED WITHOUT PAYMENT OF ROYALTY PROVIDED THAT EACH REPRODUCTION IS DONE WITHOUT ALTERATION AND THAT THE JOURNAL REFERENCE AND COPYRIGHT NOTICE ARE INCLUDED ON THE FIRST PAGE.

The theoretical compression ratio for each of the files has been computed using the V.42 *bis* algorithm with dictionary sizes of 512, 1024, 1536, 2048, 2560, 3072, 3584 and 4096 bytes, for maximum string lengths of 6, 16, 32, 64, 128 and 250.

Description of each test file type:

EXE an executable file (processor and operating system unknown);
GRAPHIC a graphics metafile;
MIXED3 ASCII text, database, assembly source, and single-character files;
TEXT document in word processor format.

MNP

The theoretical compression ratio for each of the files has also been computed for MNP5.

The following table shows the compressibility of the test files for MNP5.

File name	Size (bytes)	Compressed Size (bytes)
1.TST	983040	561112
2.TST	327680	190336
3.TST	196608	153716
4.TST	131072	146527
5.TST	524288	178179