Cancellation Flows for Provisioning Process
Figure 5

Introduction

A service order and/or subscription may be cancelled through the following processes:

- The end-user contacts the Old or New Service Provider and requests cancellation of their porting request.
- Conflict Flow for the Service Creation Provisioning Process - Figure 4: As a result of the Conflict Resolution process (at tie-point C) the Old and New Service Providers agree to cancel the subscription and applicable service orders.

Step	Description
1. End-user	• The Cancellation Process may begin with an end-user requesting cancellation of their pending port. The Cancellation process flow applies only to that period of time between subscription creation, and either activation or cancellation of the porting request. If activation completed and the end-user wishes to revert back to the former Service Provider, it is accomplished via the Provisioning Process.
2. Did end-user contact Old or New Service Provider?	• The end-user contacts either the Old or New Service Provider to cancel the porting request. Only the Old or New Service Provider can initiate this transaction, not another Service Provider. • The contacted Service Provider gathers information necessary for sending the LSR to the other Service Provider noting cancellation, and for sending the cancellation request to NPAC SMS. • If the end-user contacted the Old Service Provider, then proceed to Step (3). • If the end-user contacted the New Service Provider, proceed to Step (6).

Cancellation Flows for Provisioning Process
Figure 5

Step	Description
3. Old Service Provider obtains end-user authorization.	• The Old Service Provider obtains actual authority from the end-user to act as the official agent on behalf of the end-user to cancel the porting request. The Old Service Provider is responsible for demonstrating such authority as necessary.
4. Old Service Provider sends notification to New Service Provider	• The Old Service Provider notifies the New Service Provider, via their inter-company interface, indicating that the porting request is to be cancelled.
5. Old Service Provider sends cancellation to NPAC, if appropriate	• The Old Service Provider, contacted directly by the end-user or notified by the New Service Provider via their inter-company interface, sends a cancellation message to NPAC via the SOA interface. This cancellation message is accepted by NPAC SMS only if the Old Service Provider had previously uploaded during the subscription creation. If the Old Service Provider sends a cancellation message and a create message was not previously sent, the NPAC responds with a reject message. If the Old Service Provider does not upload a create message to the NPAC SMS for this subscription, it cannot subsequently send a cancellation message. • The Old Service Provider takes appropriate action related to internal work orders.
6. New Service Provider sends LSR to Old Service Provider noting cancellation as soon as possible prior to activation time	• The end-user contacts the New Service Provider to cancel the porting request. The New Service Provider fills out and sends the LSR form to the Old Service Provider via their inter-company interface, indicating cancellation of the porting request.

Cancellation Flows for Provisioning Process
Figure 5

Step	Description
7. New Service Provider sends cancellation to NPAC, if appropriate	• The New Service Provider, contacted directly by the end-user or notified by the Old Service Provider via their inter-company interface, sends a cancellation message to NPAC via the SOA interface. This cancellation message is accepted by NPAC SMS only if the New Service Provider previously uploaded during the subscription creation. If the New Service Provider sends a cancellation message and a create message was not previously sent, the NPAC responds with a reject message. If the New Service Provider did not upload a create message to the NPAC SMS for this subscription, it cannot subsequently send a cancellation message. • The New Service Provider takes appropriate action related to internal work orders.
8. Did NPAC receive notification(s) within nine (9) business hours?	• The NPAC applies a nine (9) business hour [tunable parameter] time limit on receiving cancellation messages from both Service Providers. This is referred to as the Initial Cancellation Window. • NPAC SMS processing timers include business hours only, except where otherwise specified. Local business hours are defined as 12 daytime hours per day on Monday through Friday, except holidays. Holidays and business hours are regionally defined. • The NPAC SMS tests for receipt of cancellation messages from the two Service Providers based on which Service Provider had previously uploaded into NPAC SMS. Since the Old Service Provider's upload is optional for subscription creation, if the Old Service Provider did not upload during the creation process, the Old Service Provider's input during cancellation is not accepted by NPAC SMS. Similarly, if during the subscription creation process only the Old Service Provider uploaded, and not the New Service Provider, only the Old Service

Cancellation Flows for Provisioning Process
Figure 5

Step	Description
	Provider's input is accepted when canceling an order. • For a "concurred" subscription, when the first cancellation message is received, NPAC sets the subscription status to *cancel-pending*. Both the Old and New Service Providers are notified of this change in status via the SOA interface. • If the second cancellation notification, from the other Service Provider, is received within nine (9) business hours, proceed to Step (11). • If the second cancellation notification from the other Service Provider is not received within nine (9) business hours, proceed to Step (9). • For a "non-concurred" subscription, when the first cancellation message is received, NPAC sets the subscription status directly to *cancel*, and proceeds to Step (11). Both the Old and New Service Providers are notified of this change in status via the SOA interface.
9. NPAC notifies appropriate Service Provider that information is missing	• The Initial Cancellation Window starts with receipt of the first cancellation message at NPAC. When this timer times out, the NPAC requests the missing information from the Service Provider who did not provide the cancellation message via the SOA interface. Only "concurred" subscriptions reach this point in the process flow.
10. Does NPAC receive concurring notification within nine (9) business hours?	• The NPAC applies a nine (9) business hours [tunable parameter] time limit on receiving cancellation messages from both Service Providers. This is referred to as the Final Cancellation Window.
	• NPAC SMS processing timers include business hours only, except where otherwise specified. Local business hours are defined as 12 daytime hours per day on Monday through Friday, except holidays. Holidays and business hours are regionally defined.

Cancellation Flows for Provisioning Process
Figure 5

Step	Description
	• Upon receipt of the concurring notification, proceed to Step (11). • If no notification is received by the time this timer times out, proceed to tie-point H, "Cancellation Conflict Process Flow."
11. NPAC logs information, cancels subscription, and notifies both Service Providers of cancellation	• The porting request is cancelled by changing the subscription status to *cancelled*. Both Service Providers are notified of the cancellation via the SOA interface.
12. END	

INTER-SERVICE PROVIDER LNP OPERATIONS FLOWS
- CANCELLATION CONFLICT FLOW FOR PROVISIONING PROCESS -

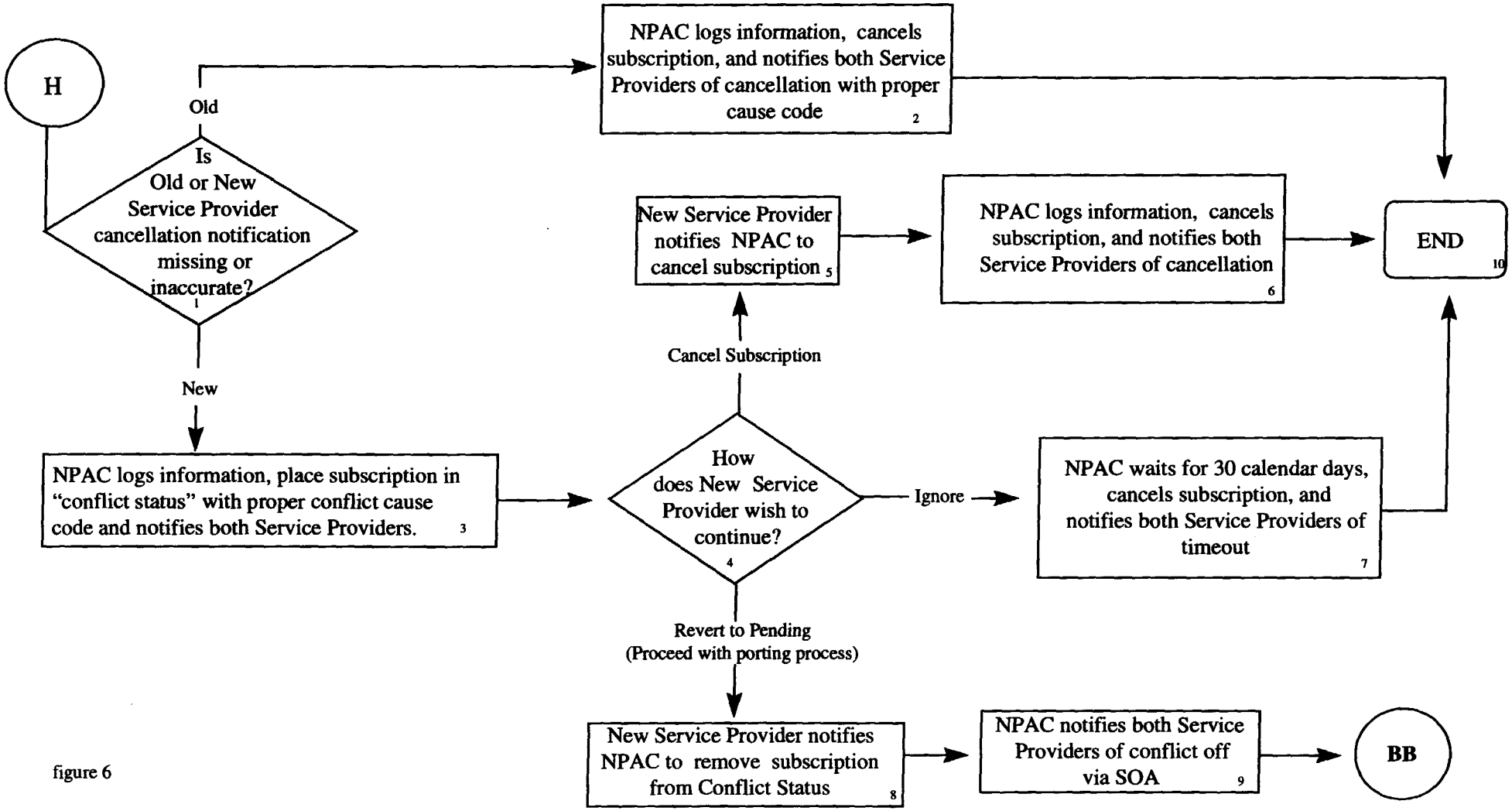

figure 6

Cancellation Conflict Flows for Provisioning Process
Figure 6

Step	Description
1. Is Old or New Service Provider cancellation notification missing or inaccurate?	• At this point in the process flow, the subscription status is *cancel pending*, because either the Old or New Service Provider's cancellation notification is missing or inaccurate (i.e., mismatched). • If the Old Service Provider's notification is at fault, then proceed to Step (2). • If the New Service Provider's notification is at fault, then proceed to Step (3).
Note that the Cancellation Conflict process flow is reached only for "concurred" subscriptions.	
2. NPAC logs information, cancels subscription, and notifies both Service Providers of cancellation with proper cause code	• If the Old Service Provider does not provide a cancellation notification message to NPAC, in spite of a Cancellation LSR from the New Service Provider and two reminder messages from NPAC, the subscription is cancelled. NPAC notifies both Service Providers via the SOA interface, that the subscription status is updated to *cancelled*, and places the proper cause code on the subscription record. • Both Service Providers take appropriate action related to internal work orders.
3. NPAC logs information, places subscription in "conflict status" with proper conflict cause code, and notifies both Service Providers	• If the New Service Provider does not provide a cancellation notification message to NPAC, in spite of a Cancellation LSR from the Old Service Provider and a reminder message from NPAC, the subscription is placed in a *conflict* state. NPAC also writes the proper conflict cause code to the subscription record, and notifies both Service Providers, with proper conflict cause code, of the change in status via the SOA interface. • Both Service Providers take appropriate action related to internal work orders.

Cancellation Conflict Flows for Provisioning Process
Figure 6

Step	Description
4. How does New Service Provider wish to continue?	• With the subscription in *conflict*, it is only the New Service Provider who controls the transaction. The New Service Provider makes a concerted effort to contact the Old Service Provider prior to proceeding. • If the New Service Provider decides to cancel the subscription, proceed to Step (5). • If the New Service Provider decides to proceed with the porting process, go to Step (8). • If the New Service Provider decides to ignore, proceed to Step (7).
5. New Service Provider notifies NPAC to cancel subscription	• The New Service Provider may decide to cancel the subscription. If so, they notify NPAC of this decision via the SOA interface.
6. NPAC logs information, cancels subscription and notifies both Service Providers of cancellation	• Following notification by the New Service Provider to cancel the subscription, NPAC logs this information, and changes the subscription status to *cancelled*. Both Service Providers are notified of the change in the subscription status via the SOA interface. • Both Service Providers take appropriate action related to internal work orders
7. NPAC waits for 30 calendar days, cancels subscription, and notifies both Service Providers of time-out.	• After no response from the New Service Provider for 30 calendar days regarding this particular subscription, NPAC changes the status to *cancelled* and notifies both Service Providers of the change in status via the SOA interface. • Both Service Providers take appropriate action related to internal work orders.

Cancellation Conflict Flows for Provisioning Process
Figure 6

Step	Description
8. New Service Provider notifies NPAC to remove subscription from Conflict status	• The New Service Provider may choose to proceed with the porting process, in spite of a cancellation message from the Old Service Provider. As both Service Providers are presumably basing their actions on the end-user's request, and each is apparently getting a different request from that end-user, each should ensure the accuracy of the request. • If the New Service Provider decides to proceed with the porting, they update the status of the subscription to *pending* via the SOA interface. • It is the responsibility of the New Service Provider to contact the Old Service Provider, to request that related work orders which support the porting process are performed. The Old Service Provider must support the porting process.
9. NPAC notifies both Service Providers of conflict off via SOA	• NPAC notifies both Service Providers of the change in subscription status. The porting process resumes as normal, at tie-point BB.
10. END	

INTER-SERVICE PROVIDER LNP OPERATIONS FLOWS
- DISCONNECT PROCESS FOR PORTED TELEPHONE NUMBERS -

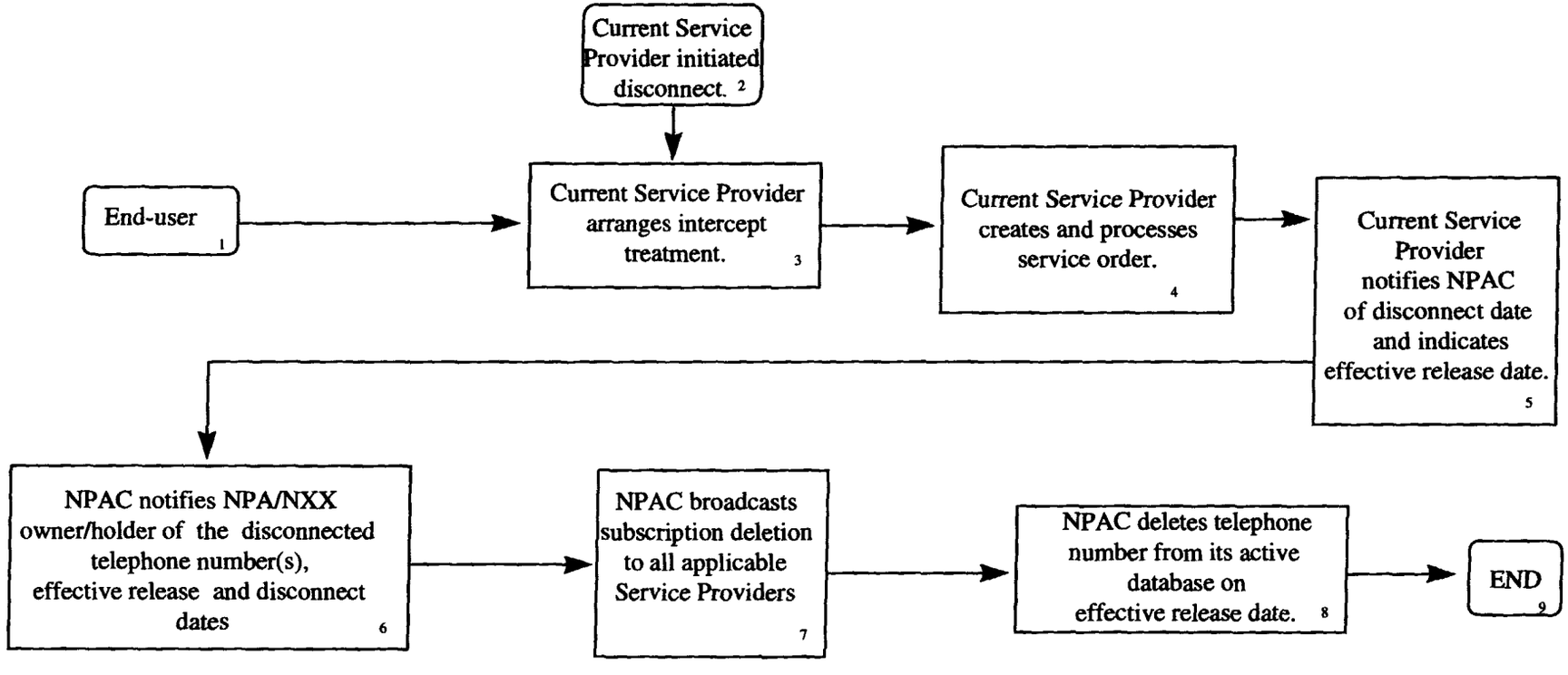

figure 7

Disconnect Process for Ported Telephone Numbers
Figure 7

Step	Description
1. End-user calls current Service Provider to disconnect service.	• The end user provides disconnect date and negotiates intercept treatment with current Service Provider.
2. Current Service Provider initiated disconnect	• Current Service Provider initiates disconnect of service based on regulatory authority(s)
3. Current Service Provider arranges intercept treatment	• Current Service Provider arranges intercept treatment as negotiated with the end user, or, when the disconnect is Service Provider initiated, per internal processes.
4. Current Service Provider creates and processes service order	• Current Service Provider follows existing internal process flows to ensure the disconnect within its own systems.
5. Current Service Provider notifies NPAC of disconnect date[1] and indicates effective release date[2]	• Current Service Provider notifies NPAC of disconnect date via the SOA interface and indicates effective release date, which defines when the broadcast occurs. If no effective release date is given, the broadcast from NPAC/SMS is immediate. The maximum interval between disconnect date and effective release date is 18 months.
6. NPAC notifies NPA/NXX owner/holder of the disconnected telephone number(s), effective release and disconnect dates	• On effective release date, NPAC notifies NPA/NXX owner/holder of the disconnected telephone number(s), effective release and disconnect dates via the SOA.
7. NPAC broadcasts subscription deletion to all applicable Service Providers	• On effective release date, NPAC broadcasts subscription deletion to all applicable Service Providers via LSMS
8. NPAC deletes telephone number(s) from active database on effective release date	• On effective release date, NPAC/SMS removes number from its database.
9. END	

[1] Disconnect Date: Date the telephone number or numbers are no longer associated between an end user and the current Service Provider.
[2] Effective Release Date: Date the telephone number reverts back to NPA/NXX holder/owner.

INTER-SERVICE PROVIDER LNP OPERATIONS FLOWS
- AUDIT PROCESS -

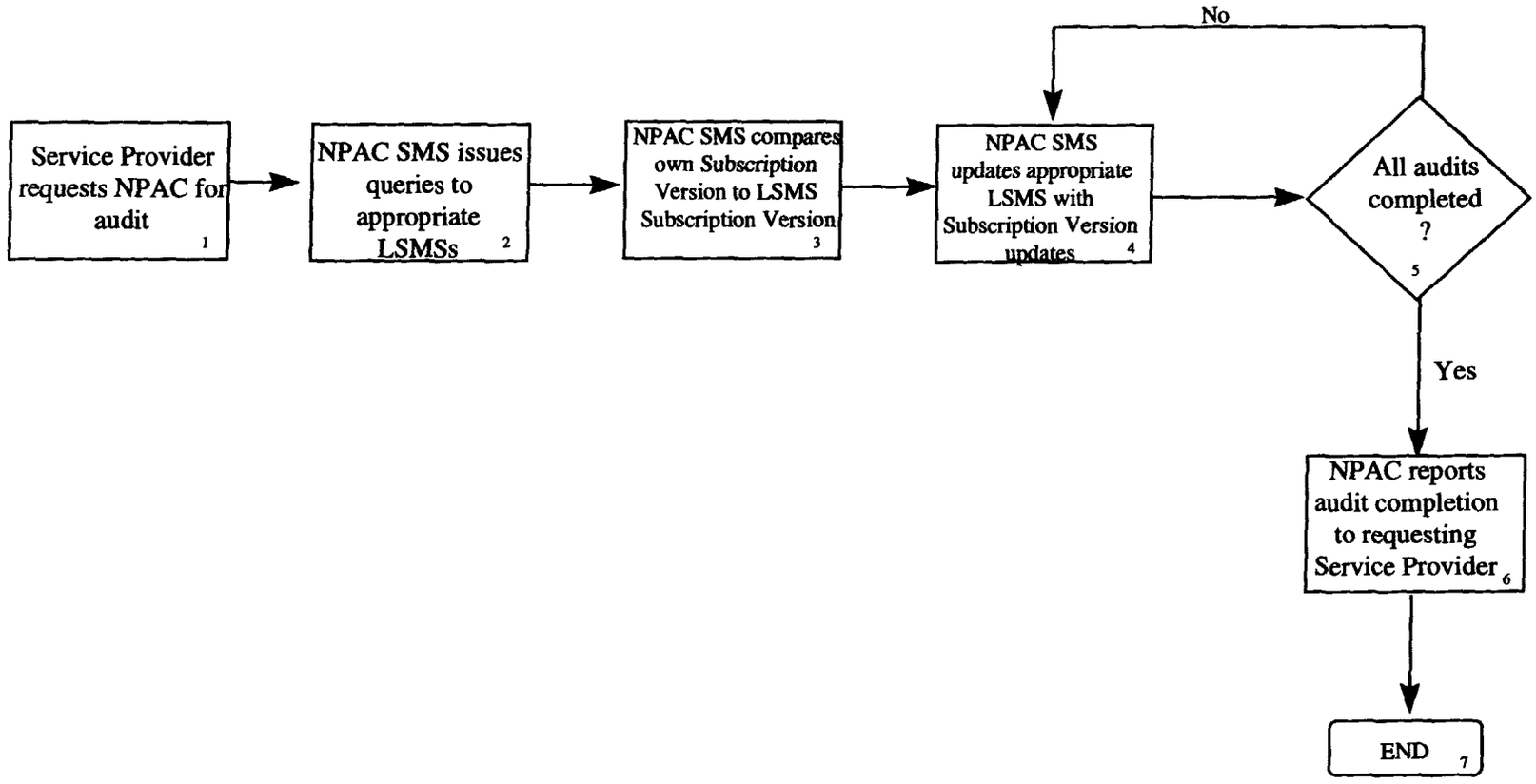

figure 8

Audit Process
Figure 8

Step	Description
1. Service Provider requests NPAC for audit.	• A Service Provider may request an audit to assist in resolution of a repair problem reported by an end-user. Prior to the audit request, the Service Provider completes internal analysis as defined by company procedures and, if another Service Provider is involved, attempts to jointly resolve the trouble in accordance with inter-company agreements. Failure to resolve the trouble following these activities, the Service Provider requests an audit.
2. NPAC SMS issues queries to appropriate LSMSs.	• The NPAC SMS issues queries to the Local SMSs (LSMS) involved in the customer port.
3. NPAC SMS compares own Subscription Version to LSMS Subscription Version	• Upon receipt of the LSMS Subscription Version, the comparison of the NPAC SMS and LSMS Subscription Versions is made to determine if there are discrepancies between the two databases.
4. NPAC SMS updates appropriate LSMS with Subscription Version updates.	• If inaccurate routing data is found, the NPAC SMS broadcasts the correct subscription data to any involved Service Provider's networks to correct inaccuracies.
5. All audits completed	• If no, return to Step (4). • If yes, proceed to Step (6).
6. NPAC reports audit completion to requesting Service Provider	• NPAC reports to the requesting Service Provider following completion of the audit to allow the Service Provider to close the trouble ticket. • Upon request, NPAC provides ad hoc reports to Service Providers that wish to determine which Service Providers are launching audit queries to their LSMS.
7. END	

INTER-SERVICE PROVIDER LNP OPERATIONS FLOWS
- CODE OPENING PROCESSES-

NPA-NXX Code Opening

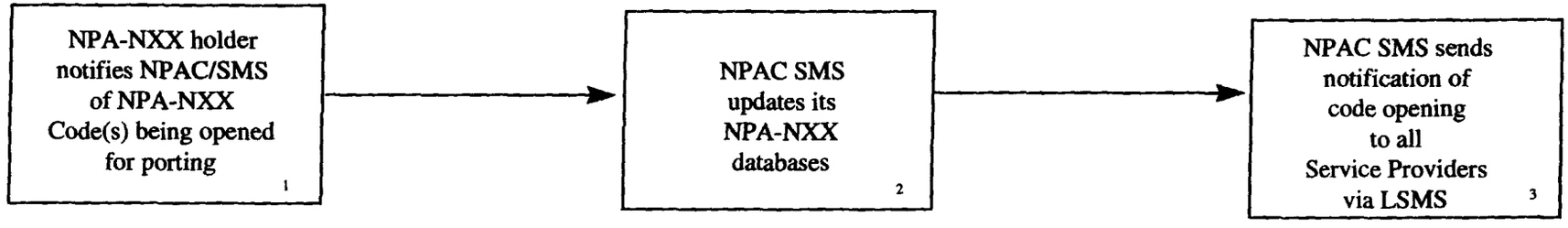

First TN Ported in NPA-NXX

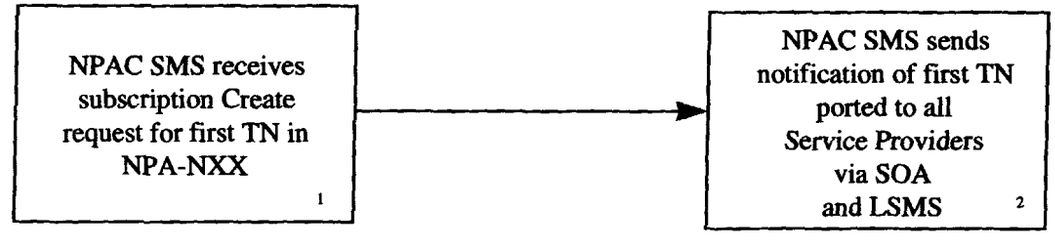

figure 9

Code Opening Processes
Figure 9

NPA-NXX Code Opening

Step	Description
1. NPA-NXX holder notifies NPAC SMS of NPA-NXX Code(s) being opened for porting.	• The service provider responsible for the NPA-NXX being opened must notify the NPAC SMS via the SOA or LSMS interface within a regionally agreed to time frame.
2. NPAC SMS updates its NPA-NXX databases	• NPAC SMS updates its databases to indicate that the NPA-NXX has been opened for porting.
3. NPAC SMS sends notification of code opening to all Service Providers via LSMS.	• The NPAC SMS provides advance notification of the scheduled opening of NPA-NXX code(s) via the LSMS interface.

First TN Ported in NPA-NXX

Step	Description
1. NPAC SMS receives subscription create request for first TN in NPA-NXX	• Service Provider notifies NPAC SMS to create subscription for the first telephone number in an NPA-NXX.
2. NPAC SMS sends notification of first TN ported to all service providers via SOA and LSMS	• When the NPAC SMS receives the first subscription create request in an NPA-NXX, it will broadcast a "heads-up" notification to all service providers via both the LSMS and SOA interfaces. Upon receipt of the NPAC message, all service providers, within five (5) business days, will complete the opening for the NPA-NXX code for porting in all switches.

APPENDIX C

NANC FUNCTIONAL REQUIREMENTS SPECIFICATION

The NANC Functional Requirements Specification (NANC FRS) document is available at the following website:

http://www.npac.com

APPENDIX D

NANC INTEROPERABLE INTERFACE SPECIFICATION

The NANC Interoperable Interface Specification (NANC IIS) document is available at the following website:

http://www.npac.com

APPENDIX E

GLOSSARY

GLOSSARY

CLEC	Competitive Local Exchange Carrier
CMIP	Common Management Information Protocol
FCC	Federal Communications Commission
FOC	Firm Order Commitment
FRS	Functional Requirements Specification
IIS	Interoperable Interface Specification
ILEC	Incumbent Local Exchange Carrier
IVR	Interactive Voice Response
LEC	Local Exchange Carrier
LNP	Local Number Portability
LNPA	Local Number Portability Administrator(s)
LSMS	Local Service Management System
LSP	Local Service Provider
LSR	Local Service Request
NANC	North American Numbering Council
NANPA	North American Numbering Plan Administrator
NPAC	Number Portability Administration Center
NSP	New Service Provider
OSP	Old Service Provider
RFP	Request for Proposal
SCP	Service Control Point
SMS	Service Management System
SOA	Service Order Administration
SP	Service Provider
SPOS	Service Provisioning Operating Systems
TN	Telephone Number