NYNEX Government Affairs
1300 I Street NW Suite 400 West Washington DC 20005
202 336 7911

G R Evans
Vice President
Federal Regulatory Affairs

EX PARTE OR LATE FILED

NYNEX

April 30, 1997

RECEIVED

APR 3 0 1997

Federal Communications Commission
Office of Secretary

Ex Parte

Mr. William F. Caton
Acting Secretary
Federal Communications Commission
1919 M Street, NW, Room 222
Washington, DC 20554

RE: CC Docket 96-45 and 96-262

Dear Mr. Caton:

Bell Atlantic and NYNEX jointly submit the attached analyses in response to requests from Commission Staff related to Staff's proposal under consideration in the proceedings captioned above.

The long distance carriers have argued that the price cap productivity factor should be increased in order to achieve reductions in access charges sufficient to offset any additional burden they face due to new Universal Service funding requirements. There is no economic basis for an increase in the productivity factor. Moreover, our proposed modifications to the Staff proposal would permit the new universal service obligations to be funded without any need to increase toll rates or increase the LEC productivity factor.

We also suggest that the Commission modify the Staff's proposal to retain the incentives and administratively simple virtues of the present price cap regime and to lessen the financial impacts on large business customers.

NYNEX Recycles

We recommend that the following modifications be made:

1. Assistance for schools, libraries, and rural health care providers should be fully funded in a manner in which the collection of funds is commensurate with the expected need for the funds. By modifying only the manner and timing in which funds are collected, not the level of the funding itself, the full benefits for schools and libraries can be assured, and the funding from telecommunications providers to support these programs can be provided as needed to meet anticipated actual expenditures over time. Collection of these funds on an as needed basis, along with advancing the effective date for the multi-line SLC increases, will reduce the initial impact on IXCs so that the expected access reductions resulting from the continued use of the current productivity factors will be sufficient to offset the net effect of increased Universal Service assessments.

2. Suggestions by Staff that LECs use projected data in future price cap filings in lieu of the historical data used at present ought to be reconsidered. One of the virtues of the price cap regime is its administrative simplicity, and that simplicity comes about largely from eliminating the need to review projected data each year as part of the LEC annual filings. Reverting to the cumbersome review process abandoned along with rate of return regulation is unwarranted, especially as local competition increases and renders any projection of demand even more subject to dispute.

3. We suggest that the PSL for multi-line businesses initially be no more than $2 per month, and that this be accomplished by having more moderate reductions in the terminating usage rate. Staff's proposal to place a disproportionate burden on large business in the form of a $4.50 per month presubscribed line charge (PSL) will be disruptive to and skews the competitive market for multiline businesses.

We applaud the considerable thought and effort that went into developing Staff's proposal. And while we believe the proposal represents an important movement towards an access regime better suited for the new competitive marketplace emerging as a result of the Telecommunications Act of 1996, we nevertheless feel that the refinements we have set forth above, and which we describe in more detail in the attachments, are necessary to assure that the full benefits of universal service and access reform will be realized by consumers.

This letter offers comment on our understanding of the current Staff recommendations with regard to these matters, and is unrelated to the joint proposal previously submitted by Bell Atlantic, NYNEX and AT&T. That proposal was a compromise in the nature of a settlement, and if not adopted as a package, neither Bell Atlantic nor NYNEX waive any of the positions previously advocated by them in these proceedings.

Sincerely,

attachment

cc: Chairman R. Hundt
Commissioner J. Quello
Commissioner S. Ness
Commissioner R. Chong
Mr. T. Boasberg
Mr. J. Coltharp
Mr. J. Casserly
Mr. D. Gonzalez
Ms. G. Keeney
Mr. R. Metzger, Jr.
Ms. K. Levitz
Mr. J. Nakahata
Mr. J. Farrell
Mr. G. Rosston
Mr. J. Garcia
Mr. J. Schlichting
Mr. R. Welch
Mr. E. Maxwell
Mr. B. Levin
Mr. L. Atlas
Mr. W. Kennard
Ms. K. Franco
Mr. P. DeGraba
Ms. S. Sallett
Ms. M. Ginsberg
Ms. J. Jackson
Mr. R. Pepper
Ms. K. Kornbluh

Table of Contents

1. Key Elements of FCC Staff Proposal

2. Projected versus Historical Demand

3. Suggested Adjustments to FCC Staff Proposal

4. Rate Structure Issues

5. Estimated Impact on the IXCs.

6. Implementation of Universal Service

7. Productivity Factors

1. Key Elements of FCC Staff Proposal

In discussions with the Commission staff with regard to the universal service and access reform proceedings, Bell Atlantic and NYNEX have gained an understanding of the current staff recommendations in these matters. The discussion below, detailing our understanding of the proposals being considered, is based on conversations with commissioners, staff, and other industry sources.

As part of our review and analysis of the current staff approach, we have prepared a financial analysis of the proposal which assesses the impact of the proposal on the LEC industry. This analysis also provides insight into impacts of the proposal on IXCs as an industry, and details the changes in rate structures and rate levels under the staff proposal. The results of this analysis are contained in Appendix A. The first page of Appendix A summarizes the results of the analysis detailing the specific company impacts on usage rate levels, SLC rates and per line (PICC) rates. Subsequent pages show the period by period results as the analysis projects impacts for the upcoming July 1997 annual price cap filing out through the annual filing in the year 2000.

In later sections of this filing, suggested revisions and modifications to the staff recommendation are proposed and explained. The financial analysis supporting the Bell Atlantic/NYNEX modifications are attached as Appendix C.

The Bell Atlantic/NYNEX understanding of the staff proposal is as follows.

Rate Restructuring

- No SLC increase for single line residence or single line business lines. On 1/1/98, multiline business SLC cap increases to $9.50, and non-primary residence cap increases to $5.00. Future increases based on inflation, with non-primary residence SLC increasing $1.00 per year, until it equals multiline business SLC.

- Remove CCL, TIC, and non-traffic sensitive switch port costs from the usage rates. Recover from per line elements, or from usage via overflow mechanism.

- PSL (or PICC) charge to the IXCs to recover the non-traffic sensitive costs not recovered by the SLC. On 1/1/98, the PSL charges are set at $.75, $1.50, and $4.50 for primary residence and single line business, non-primary residence, and multiline business lines, respectively. Future year increases would include inflation, plus increases of $.50, $1.00, and $1.50, for primary residence and single line business, non-primary residence, and multiline business lines, respectively.

- TIC separated into "service related" and "residual" TIC amounts. The service related components would transition to the appropriate services. The residual TIC would become part of the amount recovered via the PSL charge, and would be reduced by

the price cap reductions.

- The TIC amounts relating to tandem switching would transition to the tandem switching rates over a two year period. The interim transport arrangements providing IXCs options to choose shared, rather than dedicated, rates for transport would no longer be available.

- Require that reductions in the usage charges be taken first to the terminating usage rate, and then to the originating rate.

Universal Service

- Fund size of $4.65 Billion initially (1998) growing to $7.15B in 1999.

- Allocation mechanism for schools and libraries using interstate and intrastate retail revenues. High cost funds allocated based on $1.00 per line after 7/1/99 and then on interstate retail revenues.

- LEC USF costs to be allocated to IX, end-user special access and common line. Collection will be via charge on interstate end user revenues.

Key Elements of FCC Staff Proposal

The chart below reflects those dollars that go into a flat rated "pool" and are removed from per minute access rates. Assumptions:

- TIC -reallocated to service related and flat rate
- Flat rate ports, estimated at approximately one third of LS revs
- CCL (excluding payphone and LTS) and SLC
- Net contributions into USF
- BFP to be calculated including CCL, SLC and ports

Current Revenue Requirement to "flat rate pool":

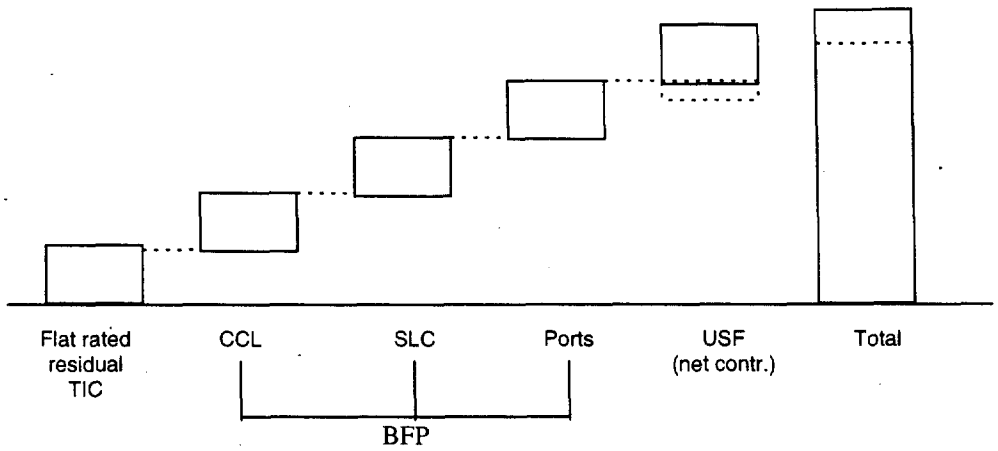

Revenue requirement recovery order:

1. SLC charges resulting from the increased caps
2. PICC charges to IXCs (PICC charges first flow from primary residence lines, then 2nd res lines and finally from multiline business lines)
3. Any remaining recovery would overflow as an originating surcharge up to the current average switched access rate.
4. Amounts over the originating cap flow to terminating access.

New revenue requirement recovery plan:

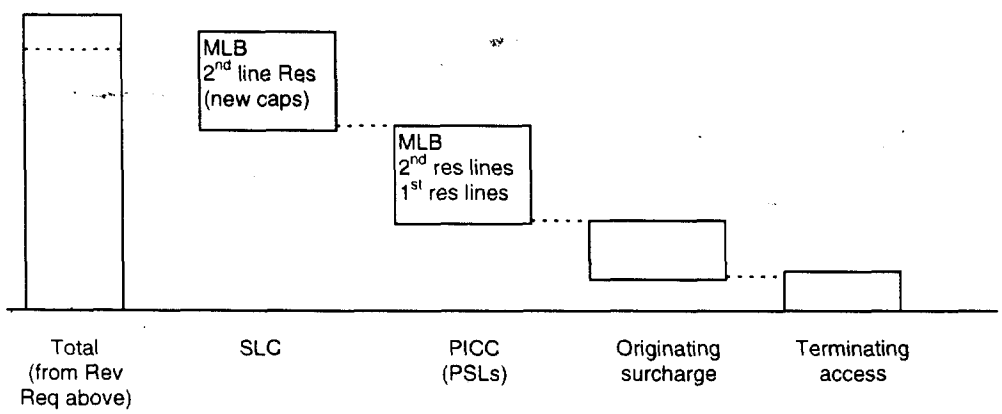

Summary of SLC & PICC Rate Proposal:

SLCs	1998	1999 - 2002 *
Primary res lines	no change	no change
Res 2nd lines	Rise to min of $5 or interstate allocated cost	increases by inflation + $1/year up to $9.50 (or allocated cost)
SLB	capped at $3.50	No change
MLB	rises to min of $9.50 or allocated cost	increases by inflation
PICCs (or PSL)		
Primary res lines (1)	$.75	inflation + $.50
Res 2nd lines (1)	$1.50	inflation + $1.00
SLB	$.75	inflation + $.50
MLB	$4.50	inflation + $1.50

(1) Total of PICC plus SLC charge cannot exceed BFP for single line residence and business

Summary of Universal Service Proposal:

	1998	1999 - 2002
Fund size	$2.65B for Education & Healthcare; $2B high cost & lifeline	$2.65B for Education & Healthecare; $4.5B for high cost & lifeline
Allocation	Inter + intrastate retail revenues	Based on $1.00 per line and then Interstate retail revenues
Collection	charge on interstate end users revenues	charge on interstate end user revenues

2. Projected versus Historical Demand

The staff analysis of their base case uses projected demand levels in evaluating the effect of the January 1, 1998 rate restructure and other access reform changes (the analysis in Appendix A uses projected demand levels). The use of projected demand for the 1998 rate restructure is inconsistent with the current price cap rules and has significant consequences for future price cap filings.

Among the significant advantages of the price cap regime for all parties is the relative ease with which annual LEC filings can be reviewed. Before price caps were instituted, the annual filings made by LECs constituted a major administrative burden, not only on the LECs who had to produce and defend them, but on the FCC and intervening parties who wanted to assure their correctness. This administrative efficiency was largely achieved by reducing dependence on projected data for investment levels, expenses, and demand, thus eliminating the highly contentious issues that arose from examining the suppositions and assumptions that underlay each projection.

While it is true that the current price cap rules use projections both to determine the Base Factor Portion (BFP) and the level of SLC revenues, these uses represent a "last remnant" of rate of return regulation and should be revised to move all calculations to an historic period. The price cap regime essentially encapsulated most of the requirements for projections into the productivity factor, and it thereby limited annual debate about a host of difficult elements in the filings. It would be a mistake, therefore, for the Commission at this point to inject projected data into the price cap process, simply in an attempt to anticipate the effects of various access structural and rate level changes. An analysis of the FCC staff proposal using actual historic demand as is used in price cap filings is included as Appendix B. As the accompanying charts illustrate, the decline in usage rates using either actual historic (Appendix B) or projected (Appendix A) demand data is similar enough to render the use of projections unwarranted, even as the dramatic increase in administrative burdens render them unwise.

In addition, it should be noted that the new environment, with unbundled elements and more players competing to provide local service, more churn will be injected into the increasingly turbulent telecommunications marketplace, and projections will be even more subject to errors in estimation. If the marketplace develops as everyone hopes it will, the Commission cannot expect projections to be any less subject to rivalrous interpretations and the administrative burden associated with price caps will increase proportionately.

Total Industry Usage Rates: Originating

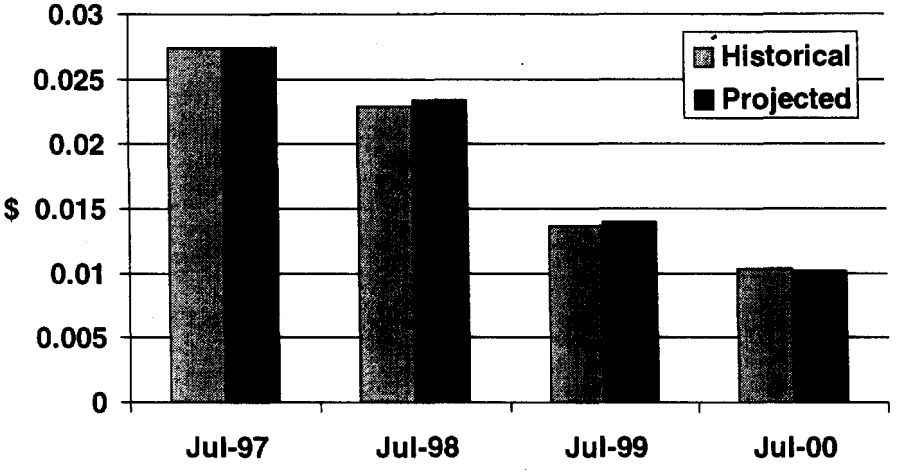

Total Industry Usage Rates: Terminating

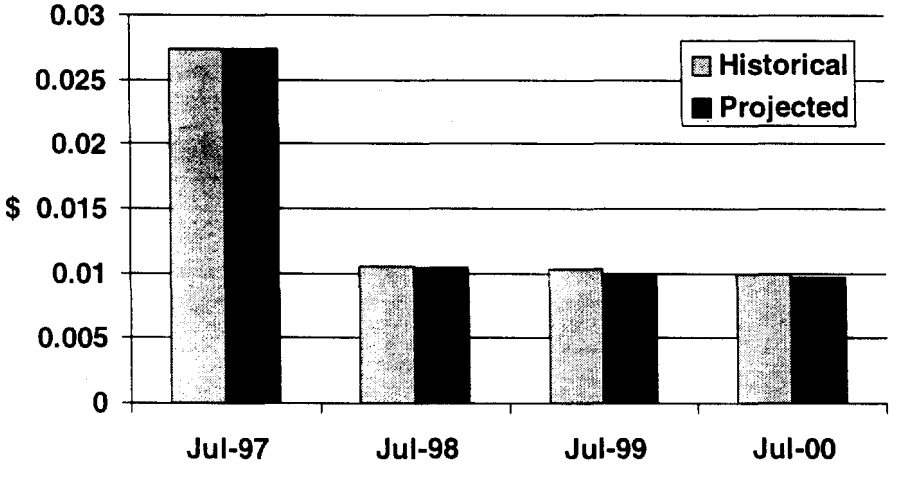

3. Suggested Adjustments to FCC Staff Proposal

In this section, Bell Atlantic/NYNEX discuss specific adjustments that can be made to the FCC Proposal. These adjustments include a suggested transition to match universal service funding to expected expenditure levels, as well as a suggestion to advance the implementation of an increase in the SLC cap for multiline business lines. In addition, there is an adjustment that would allow the July 1997 annual filing price cap reductions to be targeted to the TIC.

A. Transition of Education Fund

The Federal-State Joint Board on Universal Service recommended that the national education component of the Universal Service fund be capped at $2.25 Billion. The Joint Board realized, however, that in the process of getting started, it may take some time before the actual expenditures will reach the level of $2.25 Billion. Also included in the recommendation was that any difference in the actual expenditures and the cap would be carried over into the next period. This "carry over" process was designed to ensure that start up requirements did not affect the potential funding levels of schools. Also, it recognized the need to adapt the education system to a new source of revenues in order to bring technology to the classroom.

In order to implement the Education Fund, the Commission must designate the fund administrator and develop rules and procedures to process applications from the nation's schools and libraries, and state commissions must issue their own orders consistent with the Commission's May 6, 1997 Order.

It is obvious that such a transition will require significant industry coordination and cooperation with the education community. Despite the willingness of parties to work together, it is clear that it will take time to implement fully the Education Fund.

For this reason, it is recommended that any impact analyses performed in the Universal Service/Access Restructure proceedings use an estimate of first year amounts for the Education Fund more reflective of the start up requirements. Bell Atlantic and NYNEX have incorporated a recommended level of funding and collection that is expected to portray estimated first year levels of expenditures. As part of this transition, there can also be an ongoing review and true-up of the fund administration procedures, as described in Section 6. The latter years of the analysis are adjusted to reflect "above cap" levels of expenditures to reflect the use of the "below cap" shortfall in the first year. Estimates used in this analysis are $1.25B in Year 1, $2.25 B in Year 2, and $2.75B in Years 3 and 4.

B. Transition of Rural Health Care Fund

As part of the Joint Board's recommended decision relating to implementing the rural health care provisions of the 1996 Act, the Board did not provide a recommendation as to the level of funding required.

It is Bell Atlantic/NYNEX's suggestion that this amount be initially funded at an annual estimate of $50 Million, with this amount being subject to true-up and future increases as the nature of the telecommunications needs of these facilities become identified. In the accompanying impact analyses, the initial estimate of $50 Million is increased by $50 Million per year. In a manner similar to the true-up utilized for the Education Fund, there can be adjustments made as actual expenditure levels are experienced. To the extent necessary, the funding levels can be revised to match the actual rural health care expenditures.

C. Advance Multiline Business SLC Increase

As part of the FCC proposed access restructuring, the Subscriber Line Charge (SLC) is targeted to undergo changes as of January 1, 1998. Specific changes include increasing the SLC cap for non-primary residential lines to $5.00, as well as increasing the SLC for multiline business customers to a maximum of $9.50. There would be subsequent adjustments in future years to increase the non-primary residential SLC by $1.00 plus inflation until it equaled the multiline SLC rate. The multiline rate cap would be adjusted for inflation only.

Another important restructuring that will affect the SLC rates would also be initiated on January 1, 1998. This is the inclusion of the non-traffic sensitive switch port in the determination of the SLC.

One other SLC revision being suggested by the FCC is the application of one SLC for each basic rate ISDN interface, and five SLCs for each primary rate interface line. In addition, PRI related line port costs would be higher.

Of the SLC related restructuring scheduled to take effect on January 1, 1998, the increase in the multiline business SLC cap is relatively straightforward. It is suggested that this change, if implemented on July 1, 1997 rather than January 1, 1998, would have the effect of immediately removing approximately $200 Million from the LECs' usage rates. Other SLC-related changes, such as the NTS switch port and ISDN port changes will require detailed cost analyses, or in the case of the non-primary residential SLC increase, will require significant billing system changes. January 1, 1998 would be acceptable for these SLC changes. However, the multiline SLC cap increase can be accomplished at any time with relatively moderate billing system modifications.

As can be seen from Appendix C, the estimated July 1, 1997 price cap LEC industry average base factor portion (BFP)is $6.01. These average results, however, mask the fact that many LECs have BFPs above $6.00 and would be able to implement a multiline SLC

increase immediately. This means that the FCC can effect a $200 Million reduction in access usage charges simply by increasing the multiline SLC cap to the proposed new cap of $9.50 on July 1, 1997, rather than doing so on January 1, 1998. The benefits of this restructure should not be delayed.

D. Targeting Access Reductions To The TIC

The staff proposal will target future price cap reductions to the TIC (post-rate restructure). This serves the goal of reducing the TIC without imposing reductions in excess of those related to expected productivity growth. It is possible to determine if such a targeting to the TIC could be accompanied in the current July 1, 1997 Price Cap Filing to meet the same goal. Outlined below is a process to accomplish this targeting.

If the total price cap adjustment amount were to be targeted to the Transport Interconnection Charge (TIC) using the current rules, not all of the adjustment would flow through to the TIC element alone. Using an exogenous cost amount in the Trunking Basket would cause the PCI to be lowered by the necessary amount. This lowering of the PCI would in turn flow through to lower the SBI Upper Limits. Since the PCI is being adjusted downward, the SBI limits would also shift downward, most likely causing some SBIs to be "out of band". Adjustments to elements within each SBI would have to be made. The rest of the amount would be used to adjust the TIC.

Since current rules do not allow for targeting to a specific rate element, we propose the following as a method for targeting reductions at TIC using the current four basket structure. Under any scenario of targeting, the FCC will have to waive or revise their rules to allow this to occur.

Currently there are four baskets. Below are shown the 4 baskets and the approximate reductions for Bell Atlantic to the index in dollar amounts. These amounts were as filed in April.

Baskets	Common Line	Traffic Sensitive	Trunking	Interexchange
Formula Impact	GDPPI-X + g effects	GDPPI-X	GDPPI-X	GDPPI-(X-1)
Resulting $ Impact	$47.2	$16.7	$30.5	$4.4

As shown, normal reductions in the annual filing would be approximately $98M. Earlier recommendations on targeting assumed that the allocation of known TIC amounts to existing services would take place first. Since this quantification will require additional Commission review to accomplish, a maximum reduction of the current TIC should be incorporated into the plan.

As was previously noted, complications with unintended effects on SBIs requires that this element and the associated demand be removed from the Trunking Basket and set aside

for yearly targeting and monitoring. In 1997, therefore, Bell Atlantic could target their whole Price Cap reduction of $98M to the TIC. The new TIC revenue amount would be $264M remaining to be reduced in future annual filings. For companies whose price cap reductions exceed the amount of the maximum TIC reduction, further reductions between the Annual filing amount and the TIC would be allocated to the existing indices based on original reduction weights. This amount would be applied to the baskets as an exogenous cost change and done like a mid-year filing.

The steps needed to implement this approach are as follows:

1. Reassign service-related portions of the TIC to appropriate elements.
2. Establish separate basket for TIC.
3. Calculate revenue reduction in all categories due to required exogenous changes and price cap changes, factoring in differences in PCI and API where they exist.
4. Assign entire amount calculated in Step 3 to the TIC basket.
5. Lower PCIs toward APIs to the extent headroom was used in Step 3 to reduce revenue reduction effect.

4. Rate Structure Issues

A. Bell Atlantic/NYNEX revisions

Bell Atlantic/NYNEX recommend specific revisions to the rate structure and rate levels included in the FCC proposal. These are:

- **The multiline PSL charge should be lowered to $2.00 per PSL**
- **PSL overflow should be targeted equally to originating and terminating usage.**
- **In the alternative to adopting these rate revisions universally, they should be implemented, at a minimum, in those areas where there has been a competitive demonstration made.**

B. Discussion

The Staff's recommendation of a $4.50 per month PSL charge to the carrier would result in an unduly, and unnecessarily high, charge for multiline business lines. The effect of the FCC staff's proposed methodology, for most LECs, is to have a PSL rate that goes up to the $4.50 cap and then decreases. This introduces undue rate shock to the IXCs, and to the end users. This is especially important to the smaller multiline business line customers. It is our recommendation that this per line PSL charge be capped at $2.00 instead of the suggested $4.50. It is also suggested that reductions be targeted equally to originating and terminating usage rates.

In addition to paying the intrastate cost based rates for basic exchange access, multiline business customers also currently pay (using an industry average) close to the full base factor portion of their common line costs. Additionally, because businesses have a higher level of per line usage, they have been paying more than their share of access charges. Under the FCC's proposed methodology for recovering the common line costs, the multiline PSL charge would include overflow from the PSL charges for residence and single line business lines. Multiline business lines are therefore assessed a disproportionate share of the common line costs.

Multiline business customers with relatively low interstate usage would be penalized because they are more likely to be assessed the $4.50 charge from the IXC, and they would likely not realize offsetting benefits from any countervailing interstate toll rate reductions. Between the PSL, the SLC, and the intrastate exchange rates, the multiline business customer with low or moderate usage would pay more than its appropriate and equitable level of common line costs.

The multiline business PSL charge of $4.50 will only exacerbate the LECs' existing competitive disadvantage with respect to unbundled network elements. The LECs would be placed in a significant and unreasonable competitive disadvantage with CLECs competing using unbundled elements. To recover only the interstate portion of the common line costs, the LEC must charge the SLC to the end user and the PSL to the IXC.

At the capped levels, this could be as high as $14.00 initially ($9.50 for the SLC and $4.50 for the PSL), just for the interstate rates. In addition, there would be an intrastate exchange service charge. This level of charging is excessive when compared to the prices being authorized in the state jurisdictions for unbundled links and ports. For example, in the NYNEX region, the link and port price in the major cities areas are in the $15.00 - $16.00 range. These would be somewhat higher in other areas as the unbundled elements are subject to geographic deaveraging. In addition, under Commission rules, unbundled elements would carry no PSL charge and no SLC. The PSL and SLC charges are determined on a study area basis and are not subject to geographic deaveraging.

The PSL charge would be assessed to the IXC, and when the customer is not presubscribed to a long distance carrier, the PSL charge would be assessed to the customer. An excessively high multiline PSL rate would give larger customers an incentive to "unpresubscribe" their lines to avoid the PSL charge. In today's marketplace, a large customer could very well have more than one IXC to whom it has presubscribed different lines. Incentives could be offered to have a customer shift lines to another IXC, yet use automated smart PBX dial-around capability to use the non-presubscribed IXC. The higher the level of the PSL for multiline business, the greater the tendency for gaming the system will develop. The higher the PSL charge, the greater the incentives for avoidance. By putting LECs in the role as collection agent for this PSL charge, the rate structure places LECs at a further competitive disadvantage.

There is no appreciable difference in the relative level of usage rate decrease being accomplished with the $4.50 PSL, versus the rate levels determined using a lower PSL, such as $2.00. As seen in Appendices B and C, and on the table below, the $4.50 PSL rate does not have a drastic impact on the levels of the usage rates, yet the PSL has significant impact in the access marketplace. This is noteworthy in light of the rate shock impact that increasing and then decreasing the PSL would have on the IXC and, potentially, the end user.

		Jan. 1998	Jan. 2000
Industry Average - PSL=$4.50	Originating MOU Rate	$0.0255	$0.0103
	Terminating MOU Rate	$0.0112	$0.0100
Industry Average - PSL=$2.00	Originating MOU Rate	$0.0260	$0.0113
	Terminating MOU Rate	$0.0260	$0.0100

The impact of the $4.50 PSL is further compounded when applied in the competitive Centrex market. The result is a disproportionate burden on the LECs in highly competitive and fast growing segment of the market.[1]

[1] The Centrex line growth between 1990 and 1995 grew over 54%, and there were over 12 million Centrex lines in service in 1996 (Phillips InfoTech, December 15, 1996)

A Centrex customer with 70 lines would be equivalent to a PBX customer with 13 trunks and also equivalent to a single digital PBX service. Using the $4.50 PSL charge, the IXC serving the Centrex customer would be assessed 250 PSLs for a monthly total of $313, while the IXC for the PBX customer would be assessed 13 PSLs, or $59, and the digital service would be charged $23 monthly (assuming PSLs at the same 5 to 1 ratio as SLCs for derived channel services). Similarly, for a 2500 line Centrex customer, the PSLs would total $11,248 per month, while the PBX total would be $672 for the equivalent PBX trunks and $158 per month for the equivalent digital service PSLs. The accompanying usage reductions would be the same for each equivalent sized customer. Clearly, the Centrex market is disadvantaged with the higher PSL charge. This must be recognized, and revisions made to the Commission's proposed rate structure. Placing additional cost recovery burdens on originating access, where the customer has a choice, simply exacerbates the incumbent LEC's disadvantage in competing for customers for originating access.

Terminating usage from an IXC has no relationship to the IXC to whom the customer is presubscribed. Terminating usage can come from any IXC to any customer. Shifting a disproportionate amount of the usage reduction onto the PSL, which relates to the originating IXC, will give IXCs further incentives to avoid the high PSL.

In the alternative to lowering the multiline PSL across all LEC areas, as a minimum, the PSL cap should be targeted to the lower $2.00 amount in the areas where there has been a competitive showing made. The FCC has made determinations that there has been substantial competition, and that this level of competition has been sufficient to warrant a departure from the averaging rules that have applied to access. These parameters for competitive showings could be utilized to determine the LEC areas for which the lower PSL charge would apply. In the NYNEX USPP Order, the Commission noted that the special circumstances that existed in the competitive LATA 132 were sufficient to justify the limited waiver of the access charge rules.[2] The Commission recognized that in granting the waiver for the New York metro LATA, the result would provide particular public interest benefits to the especially high concentration of high volume toll customers in the LATA.[3] Similarly, the Commission recognized the unique circumstances that existed in some portions of the Ameritech region to conclude that a limited waiver of the access rules was justified in portions of the Chicago and Grand Rapids LATAs.[4]

While the suggested rate revisions discussed in this section should be made regardless of the level of competition, but at a minimum, where competition exists, the issue of additional pricing flexibility necessary for the LEC to compete in the competitive switched and special access marketplace needs to be addressed as well. The competitive developments can also be the triggers for providing additional price flexibility, such as

[2] USPP Order, May 4, 1995, Par. 38
[3] USPP Order, par. 43
[4] Ameritech Order, February 15, 1996, Par. 61

volume and term arrangements, contract pricing, removal of services from price cap regulation, etc.

Another important revision to the FCC proposal must be made to offset the drastic reduction to the terminating usage rate. The FCC methodology applies the overflow from the PSL charges and applies the revenues to increase the originating rate level (up to a maximum of the pre-restructure rate level). The result is that terminating rate levels are reduced almost immediately for nearly all LECs. This dramatic terminating usage reduction is not required in the marketplace at this time. The same lower usage rates can be achieved by 1999 for most companies by using the PSL overflow to reduce originating and terminating rates by the same amount. Appendix C demonstrates the results over time of applying the overflow equally. The attached Chart 1 of this section compares the impact of the FCC proposal on the originating, terminating and average rates. The average rates obtained using the revision suggested by Bell Atlantic/NYNEX are on Chart 2 of this section.

As an alternative to originating and terminating rates tracking down together, the Commission could use an alternative method, such as targeting $2.00 of reductions to the terminating usage for every $1.00 targeted to originating. This would also produce lower usage at the same level as under the FCC plan by 1999, but the originating rate level resulting from the FCC's plan would be ameliorated. The objective of having the rate levels at essentially the same for originating and terminating would be accomplished for nearly all LECs.

In a manner that would be similar to a competitive showing for the lower PSL charge, at a minimum, originating and terminating access rate levels should be lowered together in those areas where a demonstration of competition has been made. (See USPP and Ameritech orders referenced above.)

FCC Proposed Usage Rates

Chart 1

Industry Average

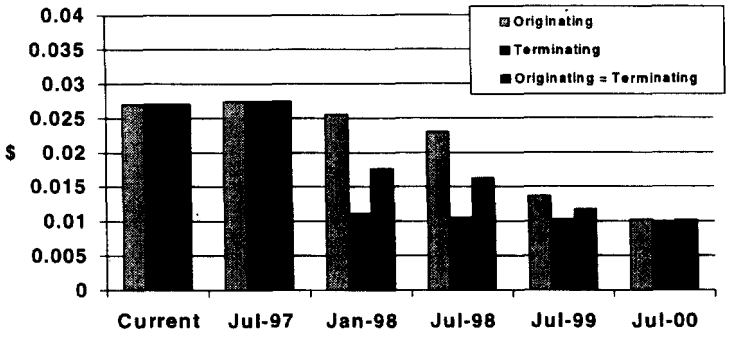

Bell Atlantic

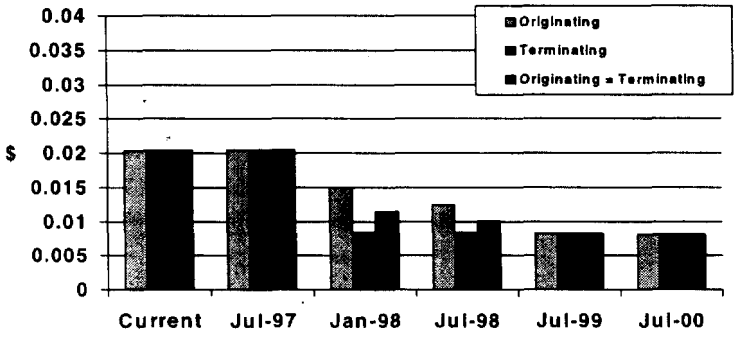

NYNEX

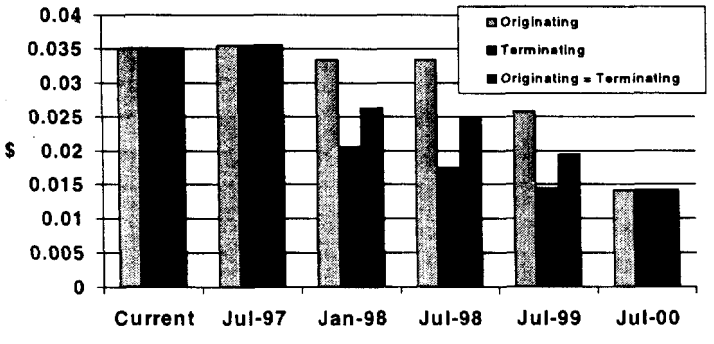

Bell Atlantic/NYNEX Proposed Usage Rates

Chart 2

Industry Average

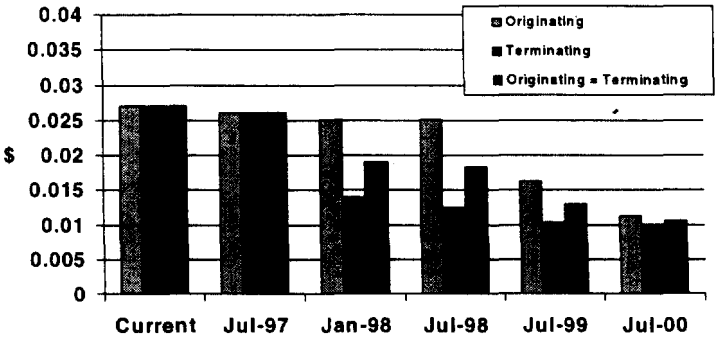

Bell Atlantic

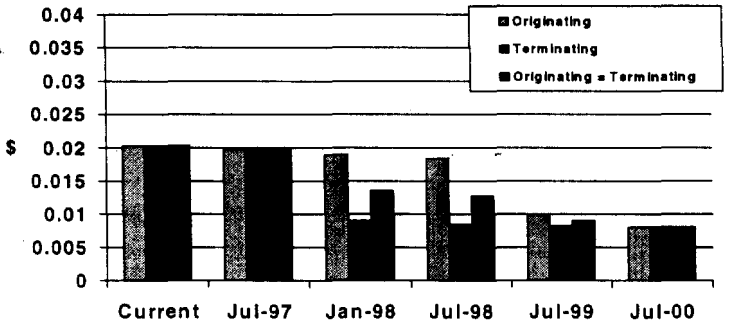

NYNEX

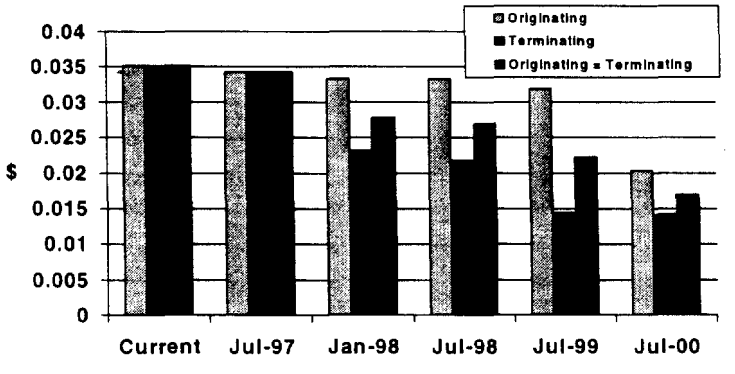

5. Estimated Impact on the IXCs. The proposed plan puts no pressure on IXCs to raise toll rates.

One of the key issues in analyzing any proposal on Universal Service and Access Reform involves estimation of the impact of the proposal on IXCs and specifically the potential impact on toll rates. This section discusses:

1. estimated impacts of the FCC's Staff proposal on the IXCs and potentially on toll rates; and,
2. change in any impacts as a result of implementing the suggested adjustments to the Staff's proposal discussed in sections 3 and 4.

The analysis reviews impacts starting on July 1997, the subsequent impacts expected on January 1998, and annually from July 1998 through July 2000. The analysis demonstrates that with only a few changes in timing and without any upward adjustment in the LEC productivity offset, universal service obligations can be fully funded and long distance carriers will benefit from a positive financial impact.

General Comments:

Universal Service Implementation Impacts

The implementation of Universal Service support for the new social programs (i.e., funding for schools & libraries and rural healthcare) will require assessments on the IXCs, LECs and others for payments to the fund administrator. The assessment is assumed to be based on the carrier's percentage of combined interstate and intrastate retail revenues to the total base of interstate and intrastate retail revenues. Over the period of the analysis, an average, approximately 38% of the new social funding obligation will be assessed to the IXCs.

Currently the IXCs fund 100% of Lifeline/Link-up and Large LEC and Rural high cost funds (estimated at $1,680M annually). These funds are collected via direct assessments and charges included in the access rates IXCs currently pay. On January 1, 1998 it is expected that funding for these universal service amounts will be provided from IXC, LECs and other telecommunication providers. The assessment related to these funds is expected to be based on interstate retail revenues only. On average, approximately 76% of Lifeline/Link-up and high cost funding obligations will be assessed to the IXCs over the analysis period. This funding change will result in savings to the IXCs.

The amounts of universal service funding assessed to the LECs will result in exogenous adjustments to IX (corridor), special access (retail) and total end-user common line rates. The amount allocated to total end-user common line rates will flow back to the IXCs via

restructured access charges and amounts to approximately 85% of the total LEC funding obligation.

Price Cap Impacts

Rate reductions under normal price cap rules are presumed to continue. The underlying assumption is a productivity factor of 5.3% (non-sharing) and an inflation factor of 2.7%.[5] Rate reductions from annual price cap filings are shown as a savings/cost offset to the IXCs.

Impact of Changes in SLC Rates

Additional revenues generated by increases to SLC caps for multiline business and non-primary residence lines will result in decreases to access charges. These reductions are also included as a savings/cost offset to the IXCs.

PICC (PSL) Pass-Through

We understand that the staff has assumed that the IXCs will pass through PICC (PSL) charges to multiline business customer only. The revenues gained by such a pass-through will provide additional resources that will offset any additional costs.

Long Distance (LD) carriers generally have contracts with their business customers covering the provision of telephone services. The contracts are developed through negotiation between the LD carrier and the customer and consequently are tailored to the customer's specific needs, including the rates, terms and conditions for the provision of service.

There has been some discussion regarding the restructure of access charges and the impact on LD carrier's contracts, e.g., whether and how changes in the structure will be passed along to their customers. If the restructure of access charges does not change the total amount collected (i.e., the restructure is revenue neutral), LD carriers can continue to use their existing rate structures and rates without any financial harm. However, if the LD carriers want to reflect the effect of the restructured access charges in their contracts, depending on the terms in their individual contract, they may be able to adjust the price structure under their contract or they may be able to renegotiate the terms of the contract.

LD carriers have argued that they will face reduced revenues due to the unique circumstance of their contracts with certain business customers. This results from the access restructure's lowering of the per minutes charges, including the federal

[5] This modeling assumption may overstate the LEC inflation adjustment. For example, in the current Tariff Review Plans, the inflation factor is 2.1%.

government. While any contract must be evaluated by the specific contract language, it is not necessarily the case that just lower per minute charges would be passed along without recognition of the new per line charges. These contracts usually contain specific provisions related to adjustments in the contract's rates. Generally, these fall into two categories:

- arrangements where changes in rates are applied to the contract's rates via a surcharge; and
- arrangements where there are scheduled competitive reviews built into the contract

In the case where rate changes are passed through via a surcharge approach, it is not reasonable to reflect only one part of the change (the lower per minute rate) without taking into account the new per line charges. If, however, that is the position the LD carrier finds itself in, most contracts usually contain provisions that allow negotiated changes in terms based on changed conditions, e.g., changes mandated by regulatory agencies.

In the case of competitive reviews, the customer usually exercises this provision to obtain a better rate by considering the competitive alternative available in the market place. The customer will use results of the review to renegotiate the contact's rates. However, the LD carrier can utilize such a negotiation to make modifications it feels is necessary.

Thus, the assertion that LD carriers will be hurt from the restructure of access due to the unique contracts is inaccurate.

Impact on Toll rates

The amount of any additional Universal Service obligations, net of rate reductions and other cost offsets are considered to be eligible for recovery by the IXCs from interstate and intrastate toll rates, private line services and other products and services. Based on 1995 TRS data, interstate and intrastate toll revenues represent approximately 72% of the IXCs total revenues. The "toll only" impact is calculated by applying this 72% factor to selected items.

<u>Summary of IXC Impacts:</u>

Chart 1: Base Case - Incremental Impacts

As shown on Chart 1, the full implementation of the Social funds at $2.65B (Education fund of $2.25B and Healthcare fund of $400M) on July 1, 1997 results in a net incremental impact on the IXCs of $949M. Incremental impacts in subsequent periods result in significant incremental savings to the IXCs ranging from $.5B to $2.6B.

Detailed supporting data are found in worksheet 1.

Chart 2: Base Case - Cumulative Impacts

On a cumulative basis, the initial impact of full implementation of the Social funds is fully absorbed in the second period (January 1998) and savings growing to a cumulative total of $4.7B by the year 2000.

Detailed supporting data are found in worksheet 2.

Chart 3: Transition Proposal - Incremental Impacts

A transition of the Social funds coupled with advancing the implementation of the increase in the multiline business SLC cap totally mitigates the initial impact on IXCs as shown in Charts 1 and 2. The following is a summary of the proposed transition of the Social funds:

	July 1997	Jan. 1998	July 1998	July 1999	July 2000
Education	1,250	1,250	2,250	2,750	2,750
Healthcare	50	50	100	150	200
Total	1,300	1,300	2,350	2,900	2,950

Detailed supporting data are found in worksheet 3.

Chart 4: Transition Proposal - Cumulative Impacts

On a cumulative basis, the transition proposal clearly smoothes the impacts and savings which accrue to the IXCs. The IXCs under the transition proposal initial gain a $106M savings which grows to $4.6B by the year 2000.

Detailed supporting data are found in worksheet 4.

Chart 1

Universal Service/Access Reform
Estimated Impact on IXCs
Incremental View

Assumption: Base Case

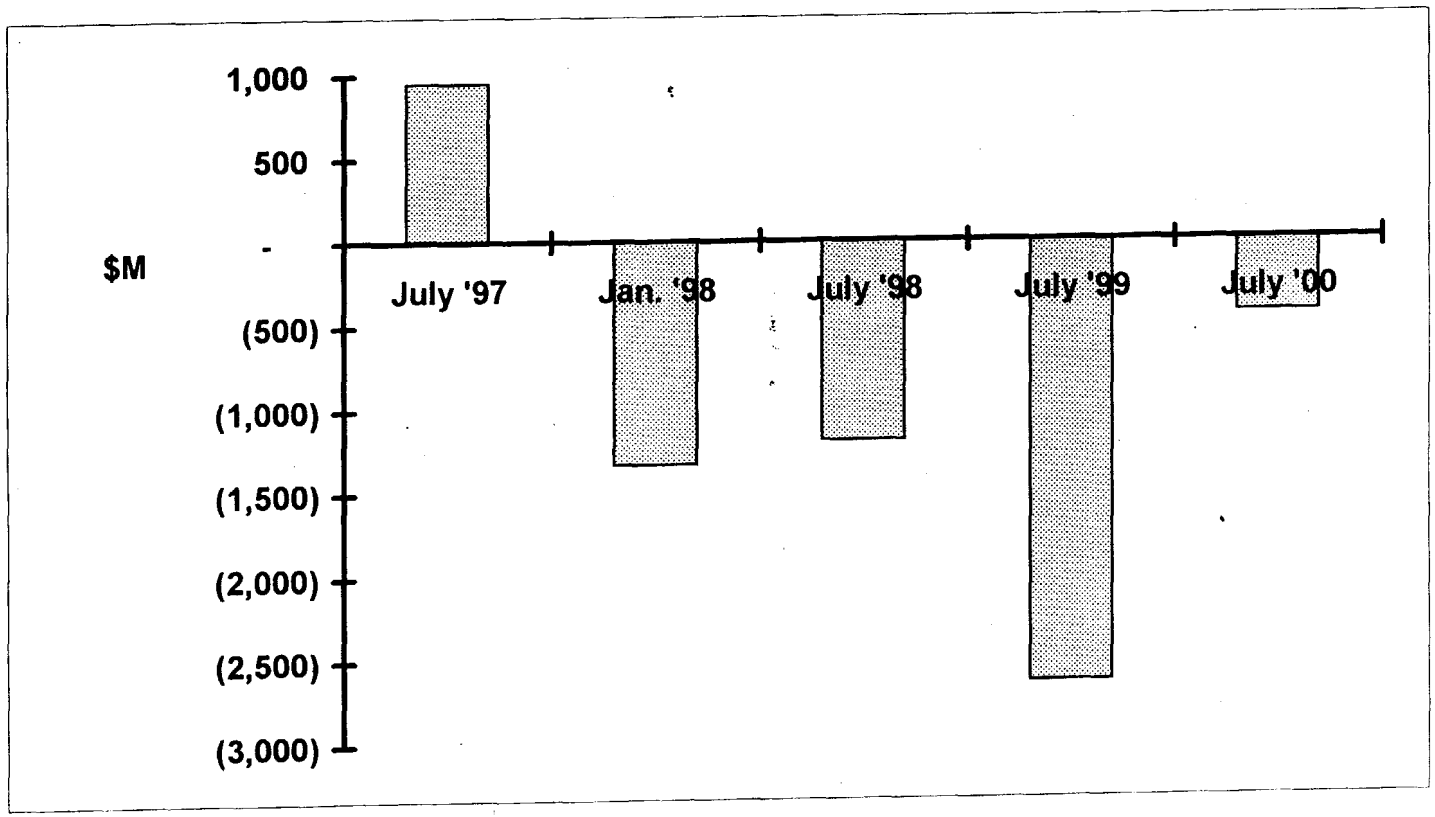

4/30/97