COST OF NETWORK ELEMENTS - AT&T/MCI Inputs

Missouri

Southwestern Bell

Loop elements	0-5 lines/sq mi	5-100 lines/sq mi	100-200 lines/sq mi	200-650 lines/sq mi	650-850 lines/sq mi	850-2550 lines/sq mi	2550-5000 lines/sq mi	5000-10000 lines/sq mi	>10000 lines/sq mi	Totals
NID										
Annual Cost	$ 114,913	$ 1,152,219	$ 507,743	$ 1,509,174	$ 422,579	$ 4,290,863	$ 3,803,186	$ 1,670,379	$ 1,146,504	$ 14,617,560
Unit Cost/month	0.52	0.48	0.43	0.44	0.44	0.45	0.45	0.42	0.33	$ 0.43
Loop Distribution (DLC)										
Annual Cost	$ 9,458,974	$ 58,385,454	$ 15,356,461	$ 29,776,662	$ 5,780,118	$ 39,335,808	$ 19,996,279	$ 6,654,892	$ 4,024,228	$ 188,748,876
Unit Cost/month	43.10	24.36	14.31	9.83	7.41	5.83	4.38	3.90	3.40	$ 8.70
Loop Distribution (non-DLC)										
Annual Cost	$ -	$ 45,319	$ 1,142,613	$ 3,007,795	$ 1,142,076	$ 13,831,425	$ 15,958,419	$ 8,208,457	$ 6,716,449	$ 50,052,554
Unit Cost/month	-	14.03	12.01	7.79	6.11	4.84	4.01	3.67	2.95	$ 4.16
Loop Distribution (all)										
Annual Cost	$ 9,458,974	$ 58,410,773	$ 16,499,073	$ 32,784,458	$ 6,922,194	$ 53,167,234	$ 35,954,698	$ 14,863,349	$ 10,740,677	$ 238,801,430
Unit Cost/month	43.10	24.34	14.13	9.60	7.15	5.53	4.21	3.77	3.10	$ 7.08
Loop Concentration (DLC)										
Annual Cost	$ 1,684,828	$ 12,219,031	$ 4,743,639	$ 13,402,664	$ 3,412,091	$ 29,437,046	$ 21,109,380	$ 7,843,062	$ 4,756,691	$ 98,588,432
Unit Cost/month	7.59	5.10	4.42	4.43	4.37	4.36	4.63	4.59	4.02	$ 4.54
Loop Concentration (non-DLC)										
Annual Cost	$ -	$ 784	$ 15,642	$ 57,985	$ 26,232	$ 408,791	$ 575,292	$ 291,674	$ 165,184	$ 1,541,583
Unit Cost/month	-	0.24	0.16	0.15	0.14	0.14	0.14	0.13	0.07	$ 0.13
Loop Concentration (all)										
Annual Cost	$ 1,684,828	$ 12,219,815	$ 4,759,281	$ 13,460,649	$ 3,438,324	$ 29,845,837	$ 21,684,672	$ 8,134,736	$ 4,921,874	$ 100,130,015
Unit Cost/month	7.59	5.09	4.07	3.94	3.55	3.11	2.54	2.06	1.42	$ 2.97
Loop Feeder (DLC)										
Annual Cost	$ 3,902,768	$ 10,423,107	$ 1,862,525	$ 3,442,524	$ 955,007	$ 8,027,215	$ 6,028,724	$ 2,736,099	$ 1,458,886	$ 38,836,854
Unit Cost/month	17.78	4.35	1.74	1.14	1.22	1.19	1.32	1.60	1.23	$ 1.79
Loop Feeder (non-DLC)										
Annual Cost	$ -	$ 5,262	$ 233,285	$ 1,418,262	$ 733,380	$ 9,632,671	$ 14,260,810	$ 7,563,320	$ 5,426,071	$ 39,273,061
Unit Cost/month	-	1.63	2.45	3.67	3.92	3.37	3.59	3.39	2.38	$ 3.27
Loop Feeder (all)										
Annual Cost	$ 3,902,768	$ 10,428,369	$ 2,095,809	$ 4,860,786	$ 1,688,387	$ 17,659,886	$ 20,289,534	$ 10,299,420	$ 6,884,957	$ 78,109,918
Unit Cost/month	$ 17.78	$ 4.35	$ 1.79	$ 1.42	$ 1.75	$ 1.84	$ 2.38	$ 2.61	$ 1.99	$ 2.32
Total Loop (DLC)										
Annual Cost	$ 15,141,483	$ 82,158,260	$ 22,429,013	$ 47,960,287	$ 10,488,117	$ 79,813,505	$ 49,167,203	$ 17,957,964	$ 10,631,939	$ 335,747,770
Unit Cost/month	69.00	34.29	20.91	15.84	13.44	11.83	10.77	10.51	8.98	$ 15.47
Total Loop (non-DLC)										
Annual Cost	$ -	$ 52,917	$ 1,432,893	$ 4,654,778	$ 1,983,367	$ 25,150,315	$ 32,584,888	$ 17,009,920	$ 13,062,074	$ 95,911,150
Unit Cost/month	-	18.39	15.06	12.05	10.81	8.79	8.19	7.62	5.74	$ 7.98
Total Loop (all)										
Annual Cost	$ 15,141,483	$ 82,211,177	$ 23,861,906	$ 52,615,066	$ 12,471,483	$ 104,963,820	$ 81,732,089	$ 34,967,884	$ 23,694,013	$ 431,658,920
Unit Cost/month	$ 69.00	34.26	20.43	15.41	12.89	10.92	9.57	8.87	6.85	$ 12.80

Total lines	18,288	199,949	97,330	284,576	80,627	800,683	711,582	328,501	288,361	2,809,897
Total lines served by DLC	18,288	199,680	89,403	252,381	65,043	562,312	380,344	142,388	98,627	1,808,444

	Annual Cost	Units		Unit Cost	
End office switching	$ 78,356,131				
Port	23,506,839	2,260,164	switched lines	$ 0.87	per line/month
Usage	54,849,291	39,498,909,412	minutes	$ 0.00139	per minute
Signaling network elements	$ 5,156,492				
Links	497,657	694	links	$ 59.80	per link per month
STP	3,186,795	39,015,006,141	TCAP+ISUP msgs	$ 0.00008	per signaling message
SCP	1,472,039	2,095,579,400	TCAP queries	$ 0.00070	per query
Transport network elements					
Dedicated					
Sw+Sp Transport	$ 19,418,347	621,424	trunks	$ 2.60	per DS-0 equivalent per month
Switched	2,240,211	71,691	trunks	$ 0.00026	per minute
Special	17,178,136	549,733	trunks		
Transmission Terminal	23,620,458	621,424	trunks	$ 3.17	per DS-0 equivalent per month
				$ 0.00032	per minute
				$ 0.00057	total per minute
Common					
Transport	$ 1,906,647	2,510,257,358	minutes	$ 0.00077	per minute per leg (orig or term)
Transmission Terminal	568,957	2,510,257,358	minutes	$ 0.00023	per minute
				$ 0.00100	total per minute
Direct					
Transport	$ 7,786,651	10,396,784,915	minutes	$ 0.00075	per minute
Transmission Terminal	2,508,590	10,396,784,915	minutes	$ 0.00024	per minute
				$ 0.00099	total per minute
Tandem switch	$ 3,296,528	2,133,655,892	minutes	$ 0.00155	per minute
Operator systems	$ 11,580,759				
Public Telephones	$ 11,513,651				
Total (w/ Public)	$ 597,372,130				
Total cost of switched network elements (w/o Public)	$ 17.08	per line/month			

142

	interconnected at end office	interconnected at tandem	wtd average
Local interconnection			
EO switching	$ 0.00139	$ 0.00139	
ISUP	$ 0.00008	$ 0.00008	
Common Transport	$ -	$ 0.00100	
Tandem Switching	$ -	$ 0.00155	
TOTAL	$ 0.00147	$ 0.00402	n/a
IXC switched access			
EO switching	$ 0.00139	$ 0.00139	
ISUP	$ 0.00008	$ 0.00008	
Dedicated Transport	$ 0.00057	$ 0.00057	
Common Transport	$ -	$ 0.00100	
Tandem Switching	$ -	$ 0.00155	
TOTAL	$ 0.00205	$ 0.00459	$ 0.00256
Signaling detail			
cost per 800 call attempt (TCAP)	$ 0.0016		
ISUP cost/transaction	$ 0.00057		
ISUP cost/completion	0.0008		
IXC switched access MOU/comp	9.70		
ISUP cost/min	$ 0.000084		
D link per month	$ 84.47		
Dedicated Transport Costs Per Trunk			
DS-0 per month			
Transport per month	$ 2.60		
Terminal per month *	$ 39.28		
TOTAL	$ 41.88		
DS-1 per month			
Transport per month	$ 62.50		
Terminal per month	$ 76.02		
TOTAL	$ 138.52		
DS-3 per month			
Transport per month	$ 1,749.90		
Terminal per month	$ 215.01		
TOTAL	$ 1,964.90		
Trunk Port Costs			
per trunk port (DS-0 equivalent)	$ 2.81		
per trunk port minute	$ 0.000001		
total EO usage per minute	$ 0.001389		
trk port/min	$ 0.000001		
other	$ 0.001388		

	0-5 lines/sq mi	5-100 lines/sq mi	100-200 lines/sq mi	200-650 lines/sq mi	650-850 lines/sq mi	850-2550 lines/sq mi	2550-5000 lines/sq mi	5000-10000 lines/sq mi	>10000 lines/sq mi	weighted average
calculated copper feeder fill (non-DLC)	0.0%	67.3%	65.5%	64.5%	67.6%	69.5%	72.2%	74.5%	76.6%	72.5%
calculated distribution fill (DLC)	34.6%	39.3%	39.7%	43.0%	46.9%	50.7%	53.7%	54.4%	57.8%	48.8%
calculated distribution fill (non-DLC)	0.0%	44.8%	37.6%	44.6%	48.7%	49.8%	54.0%	54.3%	55.4%	52.8%
										50.2%
calculated "mainframe fill" (non-DLC)	0.0%	67.3%	54.4%	45.1%	27.1%	20.2%	12.7%	14.0%	18.4%	17.4%

Hatfield Model Release 3.1
ATT/MCI Inputs

Distribution Input	Current Scenario Value	Default Scenario Value
Distribution Cable Fill - 0	0.50	0.50
Distribution Cable Fill - 5	0.55	0.55
Distribution Cable Fill - 100	0.55	0.55
Distribution Cable Fill - 200	0.60	0.60
Distribution Cable Fill - 650	0.65	0.65
Distribution Cable Fill - 850	0.70	0.70
Distribution Cable Fill - 2550	0.75	0.75
Distribution Cable Fill - 5000	0.75	0.75
Distribution Cable Fill - 10000	0.75	0.75
Buried Fraction - 0	0.75	0.75
Buried Fraction - 5	0.75	0.75
Buried Fraction - 100	0.75	0.75
Buried Fraction - 200	0.70	0.70
Buried Fraction - 650	0.70	0.70
Buried Fraction - 850	0.70	0.70
Buried Fraction - 2550	0.65	0.65
Buried Fraction - 5000	0.35	0.35
Buried Fraction - 10000	0.05	0.05
Aerial Cable Fraction - 0	0.25	0.25
Aerial Cable Fraction - 5	0.25	0.25
Aerial Cable Fraction - 100	0.25	0.25
Aerial Cable Fraction - 200	0.30	0.30
Aerial Cable Fraction - 650	0.30	0.30
Aerial Cable Fraction - 850	0.30	0.30
Aerial Cable Fraction - 2550	0.30	0.30
Aerial Cable Fraction - 5000	0.60	0.60
Aerial Cable Fraction - 10000	0.85	0.85
Conduit Placement per foot - 0	10.29	10.29
Conduit Placement per foot - 5	10.29	10.29
Conduit Placement per foot - 100	10.29	10.29
Conduit Placement per foot - 200	11.35	11.35
Conduit Placement per foot - 650	11.88	11.88
Conduit Placement per foot - 850	16.40	16.40
Conduit Placement per foot - 2550	21.60	21.60
Conduit Placement per foot - 5000	50.10	50.10
Conduit Placement per foot - 10000	75.00	75.00
Buried Placement per foot - 0	1.77	1.77
Buried Placement per foot - 5	1.77	1.77
Buried Placement per foot - 100	1.77	1.77
Buried Placement per foot - 200	1.93	1.93
Buried Placement per foot - 650	2.17	2.17
Buried Placement per foot - 850	3.54	3.54
Buried Placement per foot - 2550	4.27	4.27
Buried Placement per foot - 5000	13.00	13.00
Buried Placement per foot - 10000	45.00	45.00
Pole Spacing, feet - 0	250	250
Pole Spacing, feet - 5	250	250
Pole Spacing, feet - 100	200	200
Pole Spacing, feet - 200	200	200
Pole Spacing, feet - 650	175	175
Pole Spacing, feet - 850	175	175
Pole Spacing, feet - 2550	150	150

Feeder Input	Current Scenario Value	Default Scenario Value
Copper Feeder Fill - 0	0.65	0.65
Copper Feeder Fill - 5	0.75	0.75
Copper Feeder Fill - 100	0.80	0.80
Copper Feeder Fill - 200	0.80	0.80
Copper Feeder Fill - 650	0.80	0.80
Copper Feeder Fill - 850	0.80	0.80
Copper Feeder Fill - 2550	0.80	0.80
Copper Feeder Fill - 5000	0.80	0.80
Copper Feeder Fill - 10000	0.80	0.80
Fiber Feeder Strand Fill - 0	1.00	1.00
Fiber Feeder Strand Fill - 5	1.00	1.00
Fiber Feeder Strand Fill - 100	1.00	1.00
Fiber Feeder Strand Fill - 200	1.00	1.00
Fiber Feeder Strand Fill - 650	1.00	1.00
Fiber Feeder Strand Fill - 850	1.00	1.00
Fiber Feeder Strand Fill - 2550	1.00	1.00
Fiber Feeder Strand Fill - 5000	1.00	1.00
Fiber Feeder Strand Fill - 10000	1.00	1.00
Copper Aerial Fraction - 0	0.50	0.50
Copper Aerial Fraction - 5	0.50	0.50
Copper Aerial Fraction - 100	0.50	0.50
Copper Aerial Fraction - 200	0.40	0.40
Copper Aerial Fraction - 650	0.30	0.30
Copper Aerial Fraction - 850	0.20	0.20
Copper Aerial Fraction - 2550	0.15	0.15
Copper Aerial Fraction - 5000	0.10	0.10
Copper Aerial Fraction - 10000	0.05	0.05
Copper Buried Fraction - 0	0.45	0.45
Copper Buried Fraction - 5	0.45	0.45
Copper Buried Fraction - 100	0.45	0.45
Copper Buried Fraction - 200	0.40	0.40
Copper Buried Fraction - 650	0.30	0.30
Copper Buried Fraction - 850	0.20	0.20
Copper Buried Fraction - 2550	0.10	0.10
Copper Buried Fraction - 5000	0.05	0.05
Copper Buried Fraction - 10000	0.05	0.05
Copper Manhole Spacing, feet - 0	800	800
Copper Manhole Spacing, feet - 5	800	800
Copper Manhole Spacing, feet - 100	800	800
Copper Manhole Spacing, feet - 200	800	800
Copper Manhole Spacing, feet - 650	600	600
Copper Manhole Spacing, feet - 850	600	600
Copper Manhole Spacing, feet - 2550	600	600
Copper Manhole Spacing, feet - 5000	400	400
Copper Manhole Spacing, feet - 10000	400	400
Copper Buried Installation per foot - 0	1.77	1.77
Copper Buried Installation per foot - 5	1.77	1.77
Copper Buried Installation per foot - 100	1.77	1.77
Copper Buried Installation per foot - 200	1.93	1.93
Copper Buried Installation per foot - 650	2.17	2.17
Copper Buried Installation per foot - 850	3.54	3.54
Copper Buried Installation per foot - 2550	4.27	4.27

Hatfield Model Release 3.1
ATT/MCI Inputs

Distribution Input	Current Scenario Value	Default Scenario Value
Pole Spacing, feet - 5000	150	150
Pole Spacing, feet - 10000	150	150
Drop Distance, feet - 0	150	150
Drop Distance, feet - 5	150	150
Drop Distance, feet - 100	100	100
Drop Distance, feet - 200	100	100
Drop Distance, feet - 650	50	50
Drop Distance, feet - 850	50	50
Drop Distance, feet - 2550	50	50
Drop Distance, feet - 5000	50	50
Drop Distance, feet - 10000	50	50
Aerial Drop Placement (total) - 0	58.33	58.33
Aerial Drop Placement (total) - 5	58.33	58.33
Aerial Drop Placement (total) - 100	46.67	46.67
Aerial Drop Placement (total) - 200	35.00	35.00
Aerial Drop Placement (total) - 650	23.33	23.33
Aerial Drop Placement (total) - 850	11.67	11.67
Aerial Drop Placement (total) - 2550	11.67	11.67
Aerial Drop Placement (total) - 5000	11.67	11.67
Aerial Drop Placement (total) - 10000	11.67	11.67
Buried Drop Placement (total) - 0	0.75	0.75
Buried Drop Placement (total) - 5	0.75	0.75
Buried Drop Placement (total) - 100	0.75	0.75
Buried Drop Placement (total) - 200	0.75	0.75
Buried Drop Placement (total) - 650	0.75	0.75
Buried Drop Placement (total) - 850	0.75	0.75
Buried Drop Placement (total) - 2550	1.13	1.13
Buried Drop Placement (total) - 5000	1.50	1.50
Buried Drop Placement (total) - 10000	5.00	5.00
Buried Drop Placement Fraction - 0	1.00	1.00
Buried Drop Placement Fraction - 5	1.00	1.00
Buried Drop Placement Fraction - 100	1.00	1.00
Buried Drop Placement Fraction - 200	1.00	1.00
Buried Drop Placement Fraction - 650	1.00	1.00
Buried Drop Placement Fraction - 850	1.00	1.00
Buried Drop Placement Fraction - 2550	1.00	1.00
Buried Drop Placement Fraction - 5000	1.00	1.00
Buried Drop Placement Fraction - 10000	1.00	1.00
Buried Drop Fraction - 0	0.75	0.75
Buried Drop Fraction - 5	0.75	0.75
Buried Drop Fraction - 100	0.75	0.75
Buried Drop Fraction - 200	0.70	0.70
Buried Drop Fraction - 650	0.70	0.70
Buried Drop Fraction - 850	0.70	0.70
Buried Drop Fraction - 2550	0.70	0.70
Buried Drop Fraction - 5000	0.40	0.40
Buried Drop Fraction - 10000	0.15	0.15
Pole Investment	201.00	201.00
Pole Labor	216.00	216.00
Buried Cable Jacketing Multiplier	1.04	1.04
Conduit Investment per foot	0.60	0.60
Spare Tubes per route	1.00	1.00

Feeder Input	Current Scenario Value	Default Scenario Value
Copper Buried Installation per foot - 5000	13.00	13.00
Copper Buried Installation per foot - 10000	45.00	45.00
Copper Conduit Installation per foot - 0	10.29	10.29
Copper Conduit Installation per foot - 5	10.29	10.29
Copper Conduit Installation per foot - 100	10.29	10.29
Copper Conduit Installation per foot - 200	11.35	11.35
Copper Conduit Installation per foot - 650	11.38	11.38
Copper Conduit Installation per foot - 850	16.40	16.40
Copper Conduit Installation per foot - 2550	21.60	21.60
Copper Conduit Installation per foot - 5000	50.10	50.10
Copper Conduit Installation per foot - 10000	75.00	75.00
Fiber Aerial Fraction - 0	0.35	0.35
Fiber Aerial Fraction - 5	0.35	0.35
Fiber Aerial Fraction - 100	0.35	0.35
Fiber Aerial Fraction - 200	0.30	0.30
Fiber Aerial Fraction - 650	0.30	0.30
Fiber Aerial Fraction - 850	0.20	0.20
Fiber Aerial Fraction - 2550	0.15	0.15
Fiber Aerial Fraction - 5000	0.10	0.10
Fiber Aerial Fraction - 10000	0.05	0.05
Fiber Buried Fraction - 0	0.60	0.60
Fiber Buried Fraction - 5	0.60	0.60
Fiber Buried Fraction - 100	0.60	0.60
Fiber Buried Fraction - 200	0.60	0.60
Fiber Buried Fraction - 650	0.30	0.30
Fiber Buried Fraction - 850	0.20	0.20
Fiber Buried Fraction - 2550	0.10	0.10
Fiber Buried Fraction - 5000	0.05	0.05
Fiber Buried Fraction - 10000	0.05	0.05
Fiber Manhole Spacing, feet - 0	2,000	2,000
Fiber Manhole Spacing, feet - 5	2,000	2,000
Fiber Manhole Spacing, feet - 100	2,000	2,000
Fiber Manhole Spacing, feet - 200	2,000	2,000
Fiber Manhole Spacing, feet - 650	2,000	2,000
Fiber Manhole Spacing, feet - 850	2,000	2,000
Fiber Manhole Spacing, feet - 2550	2,000	2,000
Fiber Manhole Spacing, feet - 5000	2,000	2,000
Fiber Manhole Spacing, feet - 10000	2,000	2,000
Fiber Buried Installation per foot - 0	1.77	1.77
Fiber Buried Installation per foot - 5	1.77	1.77
Fiber Buried Installation per foot - 100	1.77	1.77
Fiber Buried Installation per foot - 200	1.93	1.93
Fiber Buried Installation per foot - 650	2.17	2.17
Fiber Buried Installation per foot - 850	3.54	3.54
Fiber Buried Installation per foot - 2550	4.27	4.27
Fiber Buried Installation per foot - 5000	13.00	13.00
Fiber Buried Installation per foot - 10000	45.00	45.00
Fiber Conduit Installation per foot - 0	10.29	10.29
Fiber Conduit Installation per foot - 5	10.29	10.29
Fiber Conduit Installation per foot - 100	10.29	10.29
Fiber Conduit Installation per foot - 200	11.35	11.35
Fiber Conduit Installation per foot - 650	11.38	11.38

Hatfield Model Release 3.1
ATT/MCI Inputs

Distribution Input	Current Scenario Value	Default Scenario Value
Regional Labor Adjustment Factor	1.00	1.00
Residential NID case, no protector	10.00	10.00
Residential NID basic labor	15.00	15.00
Maximum lines per NID	6.00	6.00
Residential Protection Block, per pair	4.00	4.00
Business NID case, no protector	25.00	25.00
Business NID basic labor	15.00	15.00
Business Protection Block, per pair	4.00	4.00
Average Lines per business location	4.00	4.00
Terminal and Splice per line, buried	42.50	42.50
Terminal and Splice per line, aerial	32.00	32.00
Drop cable investment per foot buried	0.14	0.14
Drop cable buried pairs	3.00	3.00
Drop cable investment per foot aerial	0.10	0.10
Drop cable aerial pairs	2.00	2.00
TR-303 DLC Site and Power	3,000.00	3,000.00
TR-303 DLC Maximum Lines/Increment	672	672
TR-303 DLC RT Fill Factor	0.90	0.90
TR-303 DLC Basic Common Eqpt Invest + initial lines	66,000.00	66,000.00
TR-303 DLC POTS Channel Unit Investment	310.00	310.00
TR-303 DLC POTS Lines per CU	4.00	4.00
TR-303 DLC Coin Channel Unit Investment	250.00	250.00
TR-303 DLC Coin Lines per CU	2.00	2.00
TR-303 DLC 303/LD crossover, lines	384.00	384.00
TR-303 DLC Fibers per RT	4.00	4.00
TR-303 DLC Optical Patch Panel	1,000.00	1,000.00
TR-303 DLC Copper Feeder Max Distance, ft	9,000.00	9,000.00
TR-303 DLC Common Eqpt Invest per additional 672 lines	18,500.00	18,500.00
TR-303 DLC Maximum Number of additional line modules/RT	2.00	2.00
Low Density DLC Site and Power	2,500.00	2,500.00
Low Density DLC Maximum Lines/Increment	96.00	96.00
Low Density DLC RT Fill Factor	0.90	0.90
Low Density DLC Basic Common Eqpt Invest + initial lines	13,000.00	13,000.00
Low Density DLC POTS Channel Unit Investment	310.00	310.00
Low Density DLC POTS Lines per CU	4.00	4.00
Low Density DLC Coin Channel Unit Investment	250.00	250.00
Low Density DLC Coin Lines per CU	2.00	2.00
Low Density DLC Fibers per RT	4.00	4.00
Low Density DLC Optical Patch Panel	1,000.00	1,000.00
Low Density DLC Common Eqpt Invest per additional 96 lines	11,000.00	11,000.00
Low Density DLC Maximum Number of additional line modules/R	1.00	1.00
Long Loop Loading Adjustment per line 1	-	-
Long Loop Loading Adjustment per line 2	20.00	20.00
Long Loop Loading Adjustment per line 3	40.00	40.00
Long Loop Loading Adjustment per line 4	75.00	75.00
Long Loop Loading Adjustment per line 5	110.00	110.00
Long Loop Loading Adjustment per line 6	175.00	175.00
Long Loop Cable Investment Adjustment 1	1.00	1.00
Long Loop Cable Investment Adjustment 2	1.36	1.36
Long Loop Cable Investment Adjustment 3	2.55	2.55
Long Loop Cable Investment Adjustment 4	2.55	2.55
Long Loop Cable Investment Adjustment 5	13.07	13.07

Feeder Input	Current Scenario Value	Default Scenario Value
Fiber Conduit Installation per foot - 850	16.40	16.40
Fiber Conduit Installation per foot - 2550	21.60	21.60
Fiber Conduit Installation per foot - 5000	50.10	50.10
Fiber Conduit Installation per foot - 10000	75.00	75.00
Fiber Feeder Investment per foot - 216	13.10	13.10
Fiber Feeder Investment per foot - 144	9.50	9.50
Fiber Feeder Investment per foot - 96	7.10	7.10
Fiber Feeder Investment per foot - 72	5.90	5.90
Fiber Feeder Investment per foot - 60	5.30	5.30
Fiber Feeder Investment per foot - 48	4.70	4.70
Fiber Feeder Investment per foot - 36	4.10	4.10
Fiber Feeder Investment per foot - 24	3.50	3.50
Fiber Feeder Investment per foot - 18	3.20	3.20
Fiber Feeder Investment per foot - 12	2.90	2.90
Copper Feeder Investment per foot - 4200	74.25	74.25
Copper Feeder Investment per foot - 3600	63.75	63.75
Copper Feeder Investment per foot - 3000	53.25	53.25
Copper Feeder Investment per foot - 2400	42.75	42.75
Copper Feeder Investment per foot - 1800	32.25	32.25
Copper Feeder Investment per foot - 1200	21.75	21.75
Copper Feeder Investment per foot - 900	16.50	16.50
Copper Feeder Investment per foot - 600	11.25	11.25
Copper Feeder Investment per foot - 400	7.75	7.75
Copper Feeder Investment per foot - 200	4.25	4.25
Copper Feeder Investment per foot - 100	2.50	2.50
Buried Copper Cable Sheath Multiplier	1.04	1.04
Buried Fiber Sheath Addition per foot	0.20	0.20
Pole Materials	201.00	201.00
Pole Labor	216.00	216.00
Conduit Material Investment per foot	0.60	0.60
Inner Duct Investment per foot	0.30	0.30
Spare Tubes per section	1.00	1.00
Regional Labor Multiplier	1.00	1.00
Pole Spacing, feet - 0	250	250
Pole Spacing, feet - 5	250	250
Pole Spacing, feet - 100	200	200
Pole Spacing, feet - 200	200	200
Pole Spacing, feet - 650	175	175
Pole Spacing, feet - 850	175	175
Pole Spacing, feet - 2550	150	150
Pole Spacing, feet - 5000	150	150
Pole Spacing, feet - 10000	150	150
Copper Manhole Materials - 0	1,865.00	1,865.00
Copper Manhole Materials - 5	1,865.00	1,865.00
Copper Manhole Materials - 100	1,865.00	1,865.00
Copper Manhole Materials - 200	1,865.00	1,865.00
Copper Manhole Materials - 650	1,865.00	1,865.00
Copper Manhole Materials - 850	1,865.00	1,865.00
Copper Manhole Materials - 2550	1,865.00	1,865.00
Copper Manhole Materials - 5000	1,865.00	1,865.00
Copper Manhole Materials - 10000	1,865.00	1,865.00
Copper Manhole Frame and Cover - 0	350.00	350.00

Distribution Input	Current Scenario Value	Default Scenario Value
Long Loop Cable Investment Adjustment 6	13.07	13.07
Long Loop DLC CU Adjustment 1	1.00	1.00
Long Loop DLC CU Adjustment 2	1.00	1.00
Long Loop DLC CU Adjustment 3	1.00	1.00
Long Loop DLC CU Adjustment 4	1.25	1.25
Long Loop DLC CU Adjustment 5	1.00	1.00
Long Loop DLC CU Adjustment 6	1.25	1.25
Distribution Cable Size 1	2,400	2,400
Distribution Cable Size 2	1,800	1,800
Distribution Cable Size 3	1,200	1,200
Distribution Cable Size 4	900	900
Distribution Cable Size 5	600	600
Distribution Cable Size 6	400	400
Distribution Cable Size 7	200	200
Distribution Cable Size 8	100	100
Distribution Cable Size 9	50	50
Distribution Cable Size 10	25	25
Distribution Cable Size 11	12	12
Distribution Cable Size 12	6	6
Distribution Cable Investment per foot 1	42.75	42.75
Distribution Cable Investment per foot 2	32.25	32.25
Distribution Cable Investment per foot 3	21.75	21.75
Distribution Cable Investment per foot 4	16.50	16.50
Distribution Cable Investment per foot 5	11.25	11.25
Distribution Cable Investment per foot 6	7.75	7.75
Distribution Cable Investment per foot 7	4.25	4.25
Distribution Cable Investment per foot 8	2.50	2.50
Distribution Cable Investment per foot 9	1.63	1.63
Distribution Cable Investment per foot 10	1.19	1.19
Distribution Cable Investment per foot 11	0.76	0.76
Distribution Cable Investment per foot 12	0.63	0.63
Distribution Riser Cable Size 1	2,400	2,400
Distribution Riser Cable Size 2	1,800	1,800
Distribution Riser Cable Size 3	1,200	1,200
Distribution Riser Cable Size 4	900	900
Distribution Riser Cable Size 5	600	600
Distribution Riser Cable Size 6	400	400
Distribution Riser Cable Size 7	200	200
Distribution Riser Cable Size 8	100	100
Distribution Riser Cable Size 9	50	50
Distribution Riser Cable Size 10	25	25
Distribution Riser Cable Size 11	12	12
Distribution Riser Cable Size 12	6	6
Distribution Riser Cable Investment per foot 1	42.75	42.75
Distribution Riser Cable Investment per foot 2	32.25	32.25
Distribution Riser Cable Investment per foot 3	21.75	21.75
Distribution Riser Cable Investment per foot 4	16.50	16.50
Distribution Riser Cable Investment per foot 5	11.25	11.25
Distribution Riser Cable Investment per foot 6	7.75	7.75
Distribution Riser Cable Investment per foot 7	4.25	4.25
Distribution Riser Cable Investment per foot 8	2.50	2.50
Distribution Riser Cable Investment per foot 9	1.63	1.63

Feeder Input	Current Scenario Value	Default Scenario Value
Copper Manhole Frame and Cover - 5	350.00	350.00
Copper Manhole Frame and Cover - 100	350.00	350.00
Copper Manhole Frame and Cover - 200	350.00	350.00
Copper Manhole Frame and Cover - 650	350.00	350.00
Copper Manhole Frame and Cover - 850	350.00	350.00
Copper Manhole Frame and Cover - 2550	350.00	350.00
Copper Manhole Frame and Cover - 5000	350.00	350.00
Copper Manhole Frame and Cover - 10000	350.00	350.00
Copper Manhole Site Delivery - 0	125.00	125.00
Copper Manhole Site Delivery - 5	125.00	125.00
Copper Manhole Site Delivery - 100	125.00	125.00
Copper Manhole Site Delivery - 200	125.00	125.00
Copper Manhole Site Delivery - 650	125.00	125.00
Copper Manhole Site Delivery - 850	125.00	125.00
Copper Manhole Site Delivery - 2550	125.00	125.00
Copper Manhole Site Delivery - 5000	125.00	125.00
Copper Manhole Site Delivery - 10000	125.00	125.00
Copper Manhole Excavate and Backfill - 0	2,800.00	2,800.00
Copper Manhole Excavate and Backfill - 5	2,800.00	2,800.00
Copper Manhole Excavate and Backfill - 100	2,800.00	2,800.00
Copper Manhole Excavate and Backfill - 200	2,800.00	2,800.00
Copper Manhole Excavate and Backfill - 650	3,200.00	3,200.00
Copper Manhole Excavate and Backfill - 850	3,500.00	3,500.00
Copper Manhole Excavate and Backfill - 255(	3,500.00	3,500.00
Copper Manhole Excavate and Backfill - 500(	5,000.00	5,000.00
Copper Manhole Excavate and Backfill - 100(	5,000.00	5,000.00
Fiber Pullbox Materials - 0	280.00	280.00
Fiber Pullbox Materials - 5	280.00	280.00
Fiber Pullbox Materials - 100	280.00	280.00
Fiber Pullbox Materials - 200	280.00	280.00
Fiber Pullbox Materials - 650	280.00	280.00
Fiber Pullbox Materials - 850	280.00	280.00
Fiber Pullbox Materials - 2550	280.00	280.00
Fiber Pullbox Materials - 5000	280.00	280.00
Fiber Pullbox Materials - 10000	280.00	280.00
Fiber Pullbox Installation - 0	220.00	220.00
Fiber Pullbox Installation - 5	220.00	220.00
Fiber Pullbox Installation - 100	220.00	220.00
Fiber Pullbox Installation - 200	220.00	220.00
Fiber Pullbox Installation - 650	220.00	220.00
Fiber Pullbox Installation - 850	220.00	220.00
Fiber Pullbox Installation - 2550	220.00	220.00
Fiber Pullbox Installation - 5000	220.00	220.00
Fiber Pullbox Installation - 10000	220.00	220.00

Hatfield Model Release 3.1
ATT/MCI Inputs

Distribution Input	Current Scenario Value	Default Scenario Value
Distribution Riser Cable Investment per foot 10	1.19	1.19
Distribution Riser Cable Investment per foot 11	0.76	0.76
Distribution Riser Cable Investment per foot 12	0.63	0.63
Distance Multiplier for difficult terrain	1.20	1.20
Rock Depth Threshold, inches	24.00	24.00
Hard Rock Placement Multiplier	3.50	3.50
Soft Rock Placement Multiplier	2.00	2.00
Difficult Surface Multiplier	1.00	1.00
Sidewalk/Street Fraction	0.20	0.20
Local RT - Maximum Total Distance	18,000	18,000
Town Factor	0.85	0.85
Maximum Lot Size, acres	3.00	3.00
Town Lot Size, acres	3.00	3.00
SAI Cable Size 1	2,400	2,400
SAI Cable Size 2	1,800	1,800
SAI Cable Size 3	1,200	1,200
SAI Cable Size 4	900	900
SAI Cable Size 5	600	600
SAI Cable Size 6	400	400
SAI Cable Size 7	200	200
SAI Cable Size 8	100	100
SAI Cable Size 9	50	50
SAI Cable Size 10	25	25
SAI Cable Size 11	12	12
SAI Cable Size 12	6	6
SAI Indoor Investment 1	1,052.00	1,052.00
SAI Indoor Investment 2	864.00	864.00
SAI Indoor Investment 3	576.00	576.00
SAI Indoor Investment 4	432.00	432.00
SAI Indoor Investment 5	288.00	288.00
SAI Indoor Investment 6	192.00	192.00
SAI Indoor Investment 7	96.00	96.00
SAI Indoor Investment 8	48.00	48.00
SAI Indoor Investment 9	48.00	48.00
SAI Indoor Investment 10	48.00	48.00
SAI Indoor Investment 11	48.00	48.00
SAI Indoor Investment 12	48.00	48.00
SAI Outdoor Investment 1	4,469.00	4,469.00
SAI Outdoor Investment 2	3,569.00	3,569.00
SAI Outdoor Investment 3	2,610.00	2,610.00
SAI Outdoor Investment 4	2,028.00	2,028.00
SAI Outdoor Investment 5	1,500.00	1,500.00
SAI Outdoor Investment 6	1,071.00	1,071.00
SAI Outdoor Investment 7	902.00	902.00
SAI Outdoor Investment 8	642.00	642.00
SAI Outdoor Investment 9	300.00	300.00
SAI Outdoor Investment 10	250.00	250.00
SAI Outdoor Investment 11	250.00	250.00
SAI Outdoor Investment 12	250.00	250.00

Feeder Input	Current Scenario Value	Default Scenario Value

Hatfield Model Release 3.1
ATT/MCI Inputs

Switching Input	Current Scenario Value	Default Scenario Value
Constant EO Switching Investment Term, small ICO	416.11	416.11
Constant EO Switching Investment Term, BOC and large ICO	242.73	242.73
Switch Capacity Real-Time (BHCA) - 1	10,000	10,000
Switch Capacity Real-Time (BHCA) - 2	50,000	50,000
Switch Capacity Real-Time (BHCA) - 3	200,000	200,000
Switch Capacity Real-Time (BHCA) - 4	600,000	600,000
Switch Capacity Traffic (BHCCS) - 1	30,000	30,000
Switch Capacity Traffic (BHCCS) - 2	150,000	150,000
Switch Capacity Traffic (BHCCS) - 3	600,000	600,000
Switch Capacity Traffic (BHCCS) - 4	1,800,000	1,800,000
Initial Switch Maximum Equipped Line Size	80,000	80,000
Switch Port Administrative Fill	0.98	0.98
Switch Maximim Processor Occupancy	0.90	0.90
Processor Feature Loading Multiplier - normal	1.20	1.20
Processor Feature Loading Multiplier - heavy business	2.00	2.00
Processor Feature Loading Multiplier - business penetration threshold	0.30	0.30
MDF/Protector Investment per line	17.50	17.50
Analog Line Circuit Offset for DLC lines, per line	5.00	5.00
Switch Installation Multiplier	1.10	1.10
Operator Traffic Fraction	0.02	0.02
Total Interoffice Traffic Fraction	0.65	0.65
Maximum Trunk Occupancy, CCS	27.50	27.50
Trunk Port, per end	100.00	100.00
Entrance Facility Distance, miles	0.50	0.50
Direct-routed Fraction of Local Interoffice	0.98	0.98
POPs per Tandem Location	5.00	5.00
Tandem-routed Fraction of Total IntraLATA Traffic	0.20	0.20
Tandem-routed Fraction of Total InterLATA Traffic	0.20	0.20
Local Call Attempts	9,394,922	9,394,922
Call Completion Factor	0.70	0.70
IntraLATA Calls Completed	177,143	177,143
InterLATA Intrastate Calls Completed	166,009	166,009
InterLATA Interstate Calls Completed	739,823	739,823
Local DEMs, thousands	37,570,456	37,570,456
Intrastate DEMs, thousands	3,468,219	3,468,219
Interstate DEMs, thousands	7,107,428	7,107,428
Local Business/Residence DEMs	1.10	1.10
Intrastate Business/Residence DEMs	2.00	2.00
Interstate Business/Residence DEMs	3.00	3.00
BH Fraction of Daily Usage	0.10	0.10
Annual to Daily Usage Reduction Factor	270.00	270.00
Residential Holding Time Multiplier	1.00	1.00
Business Holding Time Multiplier	1.00	1.00
Residential Call Attempts per BH	1.30	1.30
Business Call Attempts per BH	3.50	3.50
ICO STP Investment, per line (equipment)	5.50	5.50
ICO Local Tandem Investment, per line	1.90	1.90
ICO OS Tandem Investment, per line	0.80	0.80
ICO SCP Investment per line (equipment)	2.50	2.50
ICO SCP - STP per line (wirecenter)	0.40	0.40
ICO Local Tandem Investment, per line (wirecenter)	2.50	2.50
ICO OS Tandem Investment, per line (wirecenter)	1.00	1.00

Expense Input	Current Scenario Value	Default Scenario Value
Cost of Debt	0.077	0.077
Debt Fraction	0.450	0.450
Cost of Equity	0.119	0.119
Average Trunk Utilization	0.300	0.300
Tax Rate	0.393	0.393
Corporate Overhead Factor	0.104	0.104
Other Taxes Factor	0.050	0.050
Billing/Bill Inquiry per line per month	1.220	1.220
Directory Listing per line per month	0.150	0.150
Forward-looking Network Operations Factor	0.500	0.500
Alternative CO Switching Factor	0.027	0.027
Alternative Circuit Equipment Factor	0.015	0.015
EO Traffic Sensitive Fraction	0.700	0.700
Monthly LNP cost, per line	0.250	0.250
Carrier to Carrier Customer Service, per line per ye	1.69	1.69
NID Expense per line per year	1.00	1.00
DS-0/DS-1 Terminal Factor	12.4	12.4
DS-1/DS-3 Terminal Factor	9.9	9.9
Average Lines per Business Location	4	4
Distribution Aerial Fraction - 0	0.50	0.50
Distribution Aerial Fraction - 5	0.33	0.33
Distribution Aerial Fraction - 100	0.25	0.25
Distribution Aerial Fraction - 200	0.25	0.25
Distribution Aerial Fraction - 650	0.25	0.25
Distribution Aerial Fraction - 850	0.25	0.25
Distribution Aerial Fraction - 2550	0.25	0.25
Distribution Aerial Fraction - 5000	0.25	0.25
Distribution Aerial Fraction - 10000	0.25	0.25
Distribution Buried Fraction - 0	0.33	0.33
Distribution Buried Fraction - 5	0.33	0.33
Distribution Buried Fraction - 100	0.33	0.33
Distribution Buried Fraction - 200	0.33	0.33
Distribution Buried Fraction - 650	0.33	0.33
Distribution Buried Fraction - 850	0.33	0.33
Distribution Buried Fraction - 2550	0.33	0.33
Distribution Buried Fraction - 5000	0.33	0.33
Distribution Buried Fraction - 10000	0.33	0.33
Distribution Underground Fraction - 0	1.00	1.00
Distribution Underground Fraction - 5	0.50	0.50
Distribution Underground Fraction - 100	0.50	0.50
Distribution Underground Fraction - 200	0.50	0.50
Distribution Underground Fraction - 650	0.40	0.40
Distribution Underground Fraction - 850	0.33	0.33
Distribution Underground Fraction - 2550	0.33	0.33
Distribution Underground Fraction - 5000	0.33	0.33
Distribution Underground Fraction - 10000	0.33	0.33
Feeder Aerial Fraction - 0	0.50	0.50
Feeder Aerial Fraction - 5	0.33	0.33
Feeder Aerial Fraction - 100	0.25	0.25
Feeder Aerial Fraction - 200	0.25	0.25
Feeder Aerial Fraction - 650	0.25	0.25
Feeder Aerial Fraction - 850	0.25	0.25

Hatfield Model Release 3.1
ATT/MCI Inputs

Switching Input	Current Scenario Value	Default Scenario Value
ICO Tandem A Links and C Links per line (wirecenter)	0.30	0.30
Real-time Limit, BHCA	750,000	750,000
Port Limit, trunks	100,000	100,000
Common Equipment Investment	1,000,000	1,000,000
Maximum Port Fill	0.90	0.90
Maximum Real-time Occupancy	0.90	0.90
Common Equipment Intercept Factor	0.50	0.50
STP Link Capacity	720	720
STP Maximum Link Fill	0.80	0.80
Maximum STP Investment, per pair	5,000,000	5,000,000
Minimum STP Investment, per pair	1,000,000	1,000,000
Link Termination, both ends	900	900
Signaling Link Bit Rate	56,000	56,000
Link Occupancy	0.40	0.40
C Link Cross Section	24.00	24.00
ISUP Messages per Interoffice BHCA	6.00	6.00
ISUP Message Length, bytes	25.00	25.00
TCAP Messages per transaction	2.00	2.00
TCAP Message length, bytes	100.00	100.00
Fraction of BHCA requiring TCAP	0.10	0.10
SCP Investment/Transaction/Second	20,000	20,000
Operator Investment per position	6,400	6,400
Operator Maximum Utilization, per position, CCS	32	32
Operator Intervention Factor	10	10
Public Telephone Investment, per station	760	760
Lot Size, Multiplier of Switch Room Size	2	2
Tandem/EO Wire Center Common Factor	0.40	0.40
Power 1	5,000	5,000
Power 2	10,000	10,000
Power 3	20,000	20,000
Power 4	50,000	50,000
Power 5	250,000	250,000
Switch Room Size, sq ft 1	500	500
Switch Room Size, sq ft 2	1,000	1,000
Switch Room Size, sq ft 3	2,000	2,000
Switch Room Size, sq ft 4	5,000	5,000
Switch Room Size, sq ft 5	10,000	10,000
Construction, sq ft 1	75.00	75.00
Construction, sq ft 2	85.00	85.00
Construction, sq ft 3	100.00	100.00
Construction, sq ft 4	125.00	125.00
Construction, sq ft 5	150.00	150.00
Land, sq ft 1	5	5
Land, sq ft 2	8	8
Land, sq ft 3	10	10
Land, sq ft 4	15	15
Land, sq ft 5	20	20
OC-48 ADM, installed, 48 DS-3s	50,000	50,000
OC-48 ADM, installed, 12 DS-3s	40,000	40,000
OC-3/DS-1 Terminal Multiplexer, installed, 84 DS-1s	26,000	26,000
Investment per 7 DS-1s	500	500
Number of Fibers	24	24

Expense Input	Current Scenario Value	Default Scenario Value
Feeder Aerial Fraction - 2550	0.25	0.25
Feeder Aerial Fraction - 5000	0.25	0.25
Feeder Aerial Fraction - 10000	0.25	0.25
Feeder Underground Fraction - 0	0.50	0.50
Feeder Underground Fraction - 5	0.50	0.50
Feeder Underground Fraction - 100	0.40	0.40
Feeder Underground Fraction - 200	0.33	0.33
Feeder Underground Fraction - 650	0.33	0.33
Feeder Underground Fraction - 850	0.33	0.33
Feeder Underground Fraction - 2550	0.33	0.33
Feeder Underground Fraction - 5000	0.33	0.33
Feeder Underground Fraction - 10000	0.33	0.33
Feeder Buried Fraction - 0	0.40	0.40
Feeder Buried Fraction - 5	0.40	0.40
Feeder Buried Fraction - 100	0.40	0.40
Feeder Buried Fraction - 200	0.40	0.40
Feeder Buried Fraction - 650	0.40	0.40
Feeder Buried Fraction - 850	0.40	0.40
Feeder Buried Fraction - 2550	0.40	0.40
Feeder Buried Fraction - 5000	0.40	0.40
Feeder Buried Fraction - 10000	0.40	0.40
Motor Vehicles	9.16	9.16
Garage Work Equipment	11.47	11.47
Other Work Equipment	13.22	13.22
Buildings	48.99	48.99
Furniture	16.56	16.56
Office Support Equipment	11.25	11.25
Company Comm. Equipment	7.59	7.59
General Purpose Computer	6.24	6.24
Digital Electronic Switching	16.54	16.54
Operator Systems	9.94	9.94
Digital Circuit Equipment	10.09	10.09
Public Telephone Terminal Equipment	8.01	8.01
Poles	16.13	16.13
Aerial Cable - metallic	16.80	16.80
Aerial Cable - non metallic	22.11	22.11
Underground Cable - metallic	21.17	21.17
Underground Cable - non metallic	22.87	22.87
Buried - metallic	19.86	19.86
Buried - non metallic	24.13	24.13
Intrabuilding Cable - metallic	15.64	15.64
Intrabuilding Cable - non metallic	23.65	23.65
Conduit Systems	51.35	51.35

Hatfield Model Release 3.1
ATT/MCI Inputs

Switching Input	Current Scenario Value	Default Scenario Value
Pigtrails, per strand	60	60
Optical Distribution Panel	1,000	1,000
EF&I, per hour	55	55
EF&I hours	32	32
Regional Labor Factor	1	1
Channel Bank Investment, per 24 lines	5,000	5,000
Fraction of SA Lines Requiring Multiplexing	0.50	0.50
Regenerator, installed	15,000	15,000
Regenerator spacing, miles	40	40
DCS installed, per DS-3	30,000	30,000
Transmission Terminal Fill (DS-0 level)	0.90	0.90
Fiber Investment, fiber cable	3.50	3.50
Fiber Investment, number of strands per ADM	4.00	4.00
Fiber Investment, buried fraction	0.60	0.60
Fiber Investment, buried placement	1.77	1.77
Fiber Investment, buried sheath addition	0.20	0.20
Fiber Investment, conduit	0.60	0.60
Fiber Investment, spare tubes per route	1.00	1.00
Fiber Investment, conduit placement	16.40	16.40
Fiber Investment, pullbox spacing	2,000.00	2,000.00
Fiber Investment, pullbox investment	500.00	500.00
Fiber Investment, aerial fraction	0.20	0.20
Fiber Investment, pole spacing, feet	150.00	150.00
Fiber Investment, pole material	201.00	201.00
Fiber Investment, pole labor (basic)	216.00	216.00
Fraction Poles and Buried/Underground Placement Common with Fee	0.75	0.75
Fraction of Aerial Structure Assigned to Telephone	0.33	0.33
Fraction of Buried Structure Assigned to Telephone	0.33	0.33
Fraction of Underground Structure Assigned to Telephone	0.33	0.33

Expense Input	Current Scenario Value	Default Scenario Value

Unbundled Network Elements - Staff's Inputs

Missouri / Southwestern Bell

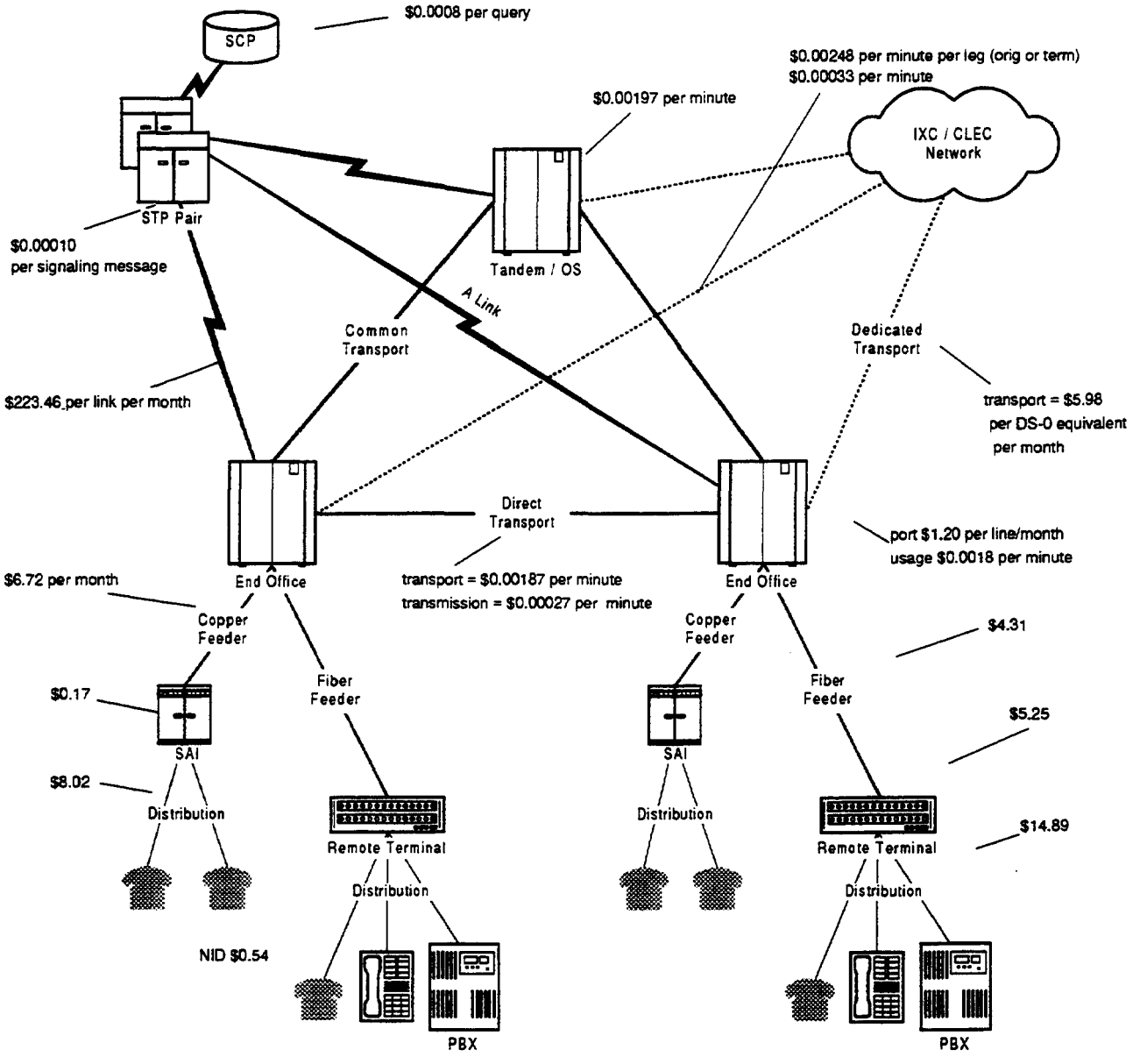

Staff's Modifications
to Hatfield Model 3.1 Inputs

In evaluating the Hatfield Model, Staff modified many of the adjustable inputs to reflect the modifications Staff proposed for SWBT. Staff also adjusted several input values to more closely reflect the characteristics of SWBT. Each of the modifications is summarized below.

Distribution Module

Fill Factors - Modified to reflect the fill factors Staff proposed for use SWBT's Cost Studies.

Distribution to Code -Modified to reflect the fill factors Staff proposed for use SWBT's Cost Studies.

Pole Investment - Modified to reflect the costs reported in SWBT's 1996 Broadgauge Report.

Pole Labor - Modified to reflect the costs reported in SWBT's 1996 Broadgauge Report.

Feeder Module

Fill Factors - Modified to reflect the fill factors Staff proposed for use SWBT's Cost Studies.

Distribution to Code -Modified to reflect the fill factors Staff proposed for use SWBT's Cost Studies.

Pole Investment - Modified to reflect the costs reported in SWBT's 1996 Broadgauge Report.

Pole Labor - Modified to reflect the costs reported in SWBT's 1996 Broadgauge Report.

Switching Module

Switch Cost per Port - HM does not have an easily adjustable modification for this input. Staff wanted to make this adjustment but it would have required a structural modification to the model.

Traffic Parameters - Modified to reflect Staff's proposed forward-looking usage adjustments. This included adjustment to Local Call Attempts, IntraLATA Calls Completed InterLATA intrastate Calls Completed, InterLATA interstate Call Completed, Local DEMs, Intrastate DEMs, and Interstate DEMs.

Maximum Real-time Occupancy - Modified to reflect SWBT's stated maximum capacity.

Fraction of Aerial Structure Assigned to Telephone - Modified to reflect Staff's proposed forward-looking pole sharing.

Fraction of Buried Structure Assigned to Telephone - Modified to reflect Staff's proposed buried structure sharing.

Fraction of Underground Structure Assigned to Telephone - Modified to reflect Staff's proposed forward-looking conduit sharing.

Expense Module

Cost of Debt - Modified to reflect Staff's proposed cost of debt.

Debt Fraction - Modified to reflect Staff's proposed capital structure.

Cost of Equity - Modified to reflect Staff's proposed cost of equity.

Tax Rate - Modified to Staff's proposed income tax rate.

Corporate Overhead Factor - Modified to reflect Staff's Proposed Common Cost Allocator.

Other Taxes Factor - Modified to reflect the Ad Valorem/Miscellaneous Tax factor contained in SWBT's ACES Model. This factor is based upon the taxes actually paid by SWBT.

Structure Fraction Assigned to Telephone - Modified to reflect the Staff's forward-looking sharing percentages. This included modifications to the Distribution Buried Fraction, Distribution Aerial Fraction, Distribution Underground Fraction, Feeder Buried Fraction, Feeder Aerial Fraction, Feeder Underground Fraction.

Depreciation Rates - Modified to reflect Staff's proposed economic depreciation rates and net salvage lives.

COST OF NETWORK ELEMENTS - Staff's Inputs

Missouri

Southwestern Bell

Loop elements	0-5 lines/sq mi	5-100 lines/sq mi	100-200 lines/sq mi	200-650 lines/sq mi	650-850 lines/sq mi	850-2550 lines/sq mi	2550-5000 lines/sq mi	5000-10000 lines/sq mi	>10000 lines/sq mi	Totals
NID										
Annual Cost	$ 152,617	$ 1,426,810	$ 634,318	$ 1,855,193	$ 538,529	$ 5,567,009	$ 4,475,677	$ 2,279,965	$ 1,390,242	$ 18,320,361
Unit Cost/month	0.61	0.59	0.54	0.56	0.57	0.58	0.57	0.50	0.41	$ 0.54
Loop Distribution (DLC)										
Annual Cost	$ 15,230,932	$ 65,700,037	$ 15,598,832	$ 26,589,482	$ 4,146,260	$ 31,807,992	$ 9,185,541	$ 8,293,159	$ 4,094,841	$ 180,647,076
Unit Cost/month	61.20	29.69	20.57	14.29	10.31	9.31	7.11	6.67	5.90	$ 14.89
Loop Distribution (non-DLC)										
Annual Cost	$ -	$ 4,229,594	$ 7,386,199	$ 18,552,542	$ 5,689,953	$ 53,154,326	$ 45,123,003	$ 23,592,239	$ 14,513,189	$ 172,241,045
Unit Cost/month	-	20.18	17.84	12.75	10.33	8.56	6.81	7.11	5.36	$ 8.02
Loop Distribution (all)										
Annual Cost	$ 15,230,932	$ 69,929,631	$ 22,985,032	$ 45,142,024	$ 9,836,213	$ 84,962,317	$ 54,308,545	$ 31,885,397	$ 18,608,030	$ 352,888,121
Unit Cost/month	61.20	28.87	19.61	13.61	10.32	8.82	6.86	6.99	5.47	$ 10.50
Loop Concentration (DLC)										
Annual Cost	$ 1,993,029	$ 12,675,206	$ 3,775,183	$ 9,834,475	$ 2,079,484	$ 17,243,029	$ 6,804,667	$ 5,912,308	$ 3,367,465	$ 63,684,845
Unit Cost/month	8.01	5.73	4.98	5.28	5.17	5.05	5.27	4.75	4.85	$ 5.25
Loop Concentration (non-DLC)										
Annual Cost	$ -	$ 46,471	$ 79,258	$ 266,856	$ 99,450	$ 1,144,378	$ 1,235,375	$ 572,624	$ 265,162	$ 3,709,573
Unit Cost/month	-	0.22	0.19	0.18	0.18	0.18	0.19	0.17	0.10	$ 0.17
Loop Concentration (all)										
Annual Cost	$ 1,993,029	$ 12,721,677	$ 3,854,441	$ 10,101,331	$ 2,178,933	$ 18,387,407	$ 8,040,041	$ 6,484,932	$ 3,632,627	$ 67,394,418
Unit Cost/month	8.01	5.25	3.29	3.05	2.29	1.91	1.02	1.42	1.07	$ 2.00
Loop Feeder (DLC)										
Annual Cost	$ 4,811,961	$ 15,517,421	$ 2,607,824	$ 5,402,190	$ 1,421,137	$ 10,830,436	$ 5,266,773	$ 4,394,429	$ 2,008,782	$ 52,260,953
Unit Cost/month	19.34	7.01	3.44	2.90	3.53	3.17	4.08	3.53	2.89	$ 4.31
Loop Feeder (non-DLC)										
Annual Cost	$ -	$ 1,062,147	$ 2,296,165	$ 8,819,812	$ 3,573,370	$ 41,605,002	$ 47,700,194	$ 24,659,205	$ 14,680,576	$ 144,396,470
Unit Cost/month	-	5.07	5.55	6.06	6.49	6.70	7.20	7.43	5.42	$ 6.72
Loop Feeder (all)										
Annual Cost	$ 4,811,961	$ 16,579,568	$ 4,903,989	$ 14,222,002	$ 4,994,507	$ 52,435,438	$ 52,966,967	$ 29,053,635	$ 16,689,358	$ 196,657,423
Unit Cost/month	$ 19.34	$ 6.84	$ 4.18	$ 4.29	$ 5.24	$ 5.45	$ 6.69	$ 6.37	$ 4.91	$ 5.85
Total Loop (DLC)										
Annual Cost	$ 22,188,539	$ 95,195,987	$ 22,392,177	$ 42,867,162	$ 7,874,153	$ 61,857,278	$ 21,987,523	$ 19,221,483	$ 9,754,913	$ 303,339,215
Unit Cost/month	89.16	43.02	29.53	23.03	19.58	18.10	17.02	15.46	14.05	$ 25.01
Total Loop (non-DLC)										
Annual Cost	$ -	$ 5,461,699	$ 9,985,602	$ 28,453,387	$ 9,674,030	$ 99,494,893	$ 97,803,707	$ 50,482,446	$ 30,565,344	$ 331,921,108
Unit Cost/month	-	26.05	24.12	19.55	17.57	16.02	14.77	15.22	11.29	$ 15.45
Total Loop (all)										
Annual Cost	$ 22,188,539	$ 100,657,687	$ 32,377,780	$ 71,320,550	$ 17,548,183	$ 161,352,170	$ 119,791,230	$ 69,703,929	$ 40,320,257	$ 635,260,323
Unit Cost/month	$ 89.16	41.55	27.82	21.50	18.42	16.76	15.13	15.28	11.85	$ 18.90

Total lines	20,739	201,857	97,695	276,395	79,391	802,395	659,591	380,122	283,450	2,801,635
Total lines served by DLC	20,739	184,387	63,199	155,095	33,505	284,783	107,662	103,633	57,868	1,010,869

	Annual Cost	Units		Unit Cost	
End office switching	$ 108,069,583				
Port	32,420,875	2,252,550	switched lines	$ 1.20	per line/month
Usage	75,648,708	42,962,410,264	minutes	$ 0.00176	per minute
Signaling network elements	$ 8,021,335				
Links	1,891,318	705	links	$ 223.46	per link per month
STP	4,202,578	43,580,269,228	TCAP+ISUP msgs	$ 0.00010	per signaling message
SCP	1,927,440	2,284,409,000	TCAP queries	$ 0.00084	per query
Transport network elements					
Dedicated					
Sw+Sp Transport	$ 44,295,478	616,948	trunks	$ 5.98	per DS-0 equivalent per month
Switched	4,872,350	67,862	trunks	$ 0.00071	per minute
Special	39,423,128	549,086	trunks		
Transmission Terminal	33,451,368	616,948	trunks	$ 4.52	per DS-0 equivalent per month
				$ 0.00054	per minute
				$ 0.00125	total per minute
Common					
Transport	$ 4,967,312	2,529,083,731	minutes	$ 0.00248	per minute per leg (orig or term)
Transmission Terminal	652,903	2,529,083,731	minutes	$ 0.00033	per minute
				$ 0.00280	total per minute
Direct					
Transport	$ 21,906,249	11,744,862,919	minutes	$ 0.00187	per minute
Transmission Terminal	3,208,104	11,744,862,919	minutes	$ 0.00027	per minute
				$ 0.00214	total per minute
Tandem switch	$ 4,201,491	2,135,527,361	minutes	$ 0.00197	per minute
Operator systems	$ 13,816,896				
Public Telephones	$ 12,688,031				
Total (w/ Public)	$ 890,539,073				
Total cost of switched network elements (w/o Public)	$ 25.31	per line/month			

	interconnected at end office	interconnected at tandem	wtd average
Local interconnection			
EO switching	$ 0.00176	$ 0.00176	
ISUP	$ 0.00015	$ 0.00015	
Common Transport	$ -	$ 0.00280	
Tandem Switching	$ -	$ 0.00197	
TOTAL	$ 0.00191	$ 0.00668	n/a
IXC switched access			
EO switching	$ 0.00176	$ 0.00176	
ISUP	$ 0.00015	$ 0.00015	
Dedicated Transport	$ 0.00125	$ 0.00125	
Common Transport	$ -	$ 0.00280	
Tandem Switching	$ -	$ 0.00197	
TOTAL	$ 0.00316	$ 0.00793	$ 0.00411
Signaling detail			
cost per 800 call attempt (TCAP)	$ 0.0019		
ISUP cost/transaction	$ 0.00085		
ISUP cost/completion	0.0012		
IXC switched access MOU/comp	8.11		
ISUP cost/min	$ 0.000150		
D link per month	$ 306.39		
Dedicated Transport Costs Per Trunk			
DS-0 per month			
Transport per month	$ 5.98		
Terminal per month *	$ 56.03		
TOTAL	$ 62.01		
DS-1 per month			
Transport per month	$ 143.60		
Terminal per month	$ 108.44		
TOTAL	$ 252.04		
DS-3 per month			
Transport per month	$ 4,020.67		
Terminal per month	$ 306.70		
TOTAL	$ 4,327.38		
Trunk Port Costs			
per trunk port (DS-0 equivalent)	$ 3.85		
per trunk port minute	$ 0.000001		
total EO usage per minute	$ 0.001761		
trk port/min	$ 0.000001		
other	$ 0.001760		

	0-5 lines/sq mi	5-100 lines/sq mi	100-200 lines/sq mi	200-650 lines/sq mi	650-850 lines/sq mi	850-2550 lines/sq mi	2550-5000 lines/sq mi	5000-10000 lines/sq mi	>10000 lines/sq mi	weighted average
calculated copper feeder fill (non-DLC)	0.0%	69.3%	73.3%	74.9%	71.3%	74.0%	75.6%	77.2%	78.9%	75.5%
calculated distribution fill (DLC)	43.1%	40.2%	42.9%	40.5%	40.3%	40.5%	40.5%	40.9%	39.2%	40.6%
calculated distribution fill (non-DLC)	0.0%	39.0%	41.2%	40.7%	41.0%	40.3%	41.0%	40.8%	41.1%	40.8%
										40.7%
calculated "mainframe fill" (non-DLC)	0.0%	55.1%	46.5%	32.4%	19.8%	13.5%	8.7%	9.0%	13.1%	13.8%

Hatfield Model Release 3.1
Staff Proposed Inputs

Distribution Input	Current Scenario Value	Default Scenario Value	Feeder Input	Current Scenario Value	Default Scenario Value
Distribution Cable Fill - 0	0.57	0.50	Copper Feeder Fill - 0	0.90	0.65
Distribution Cable Fill - 5	0.57	0.55	Copper Feeder Fill - 5	0.90	0.75
Distribution Cable Fill - 100	0.57	0.55	Copper Feeder Fill - 100	0.91	0.80
Distribution Cable Fill - 200	0.57	0.60	Copper Feeder Fill - 200	0.91	0.80
Distribution Cable Fill - 650	0.56	0.65	Copper Feeder Fill - 650	0.81	0.80
Distribution Cable Fill - 850	0.57	0.70	Copper Feeder Fill - 850	0.81	0.80
Distribution Cable Fill - 2550	0.57	0.75	Copper Feeder Fill - 2550	0.81	0.80
Distribution Cable Fill - 5000	0.57	0.75	Copper Feeder Fill - 5000	0.81	0.80
Distribution Cable Fill - 10000	0.54	0.75	Copper Feeder Fill - 10000	0.81	0.80
Buried Fraction - 0	0.85	0.75	Fiber Feeder Strand Fill - 0	1.00	1.00
Buried Fraction - 5	0.85	0.75	Fiber Feeder Strand Fill - 5	1.00	1.00
Buried Fraction - 100	0.72	0.75	Fiber Feeder Strand Fill - 100	1.00	1.00
Buried Fraction - 200	0.78	0.70	Fiber Feeder Strand Fill - 200	1.00	1.00
Buried Fraction - 650	0.78	0.70	Fiber Feeder Strand Fill - 650	1.00	1.00
Buried Fraction - 850	0.78	0.70	Fiber Feeder Strand Fill - 850	1.00	1.00
Buried Fraction - 2550	0.78	0.65	Fiber Feeder Strand Fill - 2550	1.00	1.00
Buried Fraction - 5000	0.78	0.35	Fiber Feeder Strand Fill - 5000	1.00	1.00
Buried Fraction - 10000	0.78	0.05	Fiber Feeder Strand Fill - 10000	1.00	1.00
Aerial Cable Fraction - 0	0.15	0.25	Copper Aerial Fraction - 0	0.02	0.50
Aerial Cable Fraction - 5	0.15	0.25	Copper Aerial Fraction - 5	0.02	0.50
Aerial Cable Fraction - 100	0.20	0.25	Copper Aerial Fraction - 100	0.02	0.50
Aerial Cable Fraction - 200	0.05	0.30	Copper Aerial Fraction - 200	0.02	0.40
Aerial Cable Fraction - 650	0.05	0.30	Copper Aerial Fraction - 650	0.02	0.30
Aerial Cable Fraction - 850	0.05	0.30	Copper Aerial Fraction - 850	0.02	0.20
Aerial Cable Fraction - 2550	0.05	0.30	Copper Aerial Fraction - 2550	0.02	0.15
Aerial Cable Fraction - 5000	0.05	0.60	Copper Aerial Fraction - 5000	0.02	0.10
Aerial Cable Fraction - 10000	0.05	0.85	Copper Aerial Fraction - 10000	0.02	0.05
Conduit Placement per foot - 0	10.29	10.29	Copper Buried Fraction - 0	0.81	0.45
Conduit Placement per foot - 5	10.29	10.29	Copper Buried Fraction - 5	0.81	0.45
Conduit Placement per foot - 100	10.29	10.29	Copper Buried Fraction - 100	0.55	0.45
Conduit Placement per foot - 200	11.35	11.35	Copper Buried Fraction - 200	0.14	0.40
Conduit Placement per foot - 650	11.88	11.88	Copper Buried Fraction - 650	0.14	0.30
Conduit Placement per foot - 850	16.40	16.40	Copper Buried Fraction - 850	0.14	0.20
Conduit Placement per foot - 2550	21.60	21.60	Copper Buried Fraction - 2550	0.14	0.10
Conduit Placement per foot - 5000	50.10	50.10	Copper Buried Fraction - 5000	0.14	0.05
Conduit Placement per foot - 10000	75.00	75.00	Copper Buried Fraction - 10000	0.14	0.05
Buried Placement per foot - 0	1.77	1.77	Copper Manhole Spacing, feet - 0	800	800
Buried Placement per foot - 5	1.77	1.77	Copper Manhole Spacing, feet - 5	800	800
Buried Placement per foot - 100	1.77	1.77	Copper Manhole Spacing, feet - 100	800	800
Buried Placement per foot - 200	1.93	1.93	Copper Manhole Spacing, feet - 200	800	800
Buried Placement per foot - 650	2.17	2.17	Copper Manhole Spacing, feet - 650	600	600
Buried Placement per foot - 850	3.54	3.54	Copper Manhole Spacing, feet - 850	600	600
Buried Placement per foot - 2550	4.27	4.27	Copper Manhole Spacing, feet - 2550	600	600
Buried Placement per foot - 5000	13.00	13.00	Copper Manhole Spacing, feet - 5000	400	400
Buried Placement per foot - 10000	45.00	45.00	Copper Manhole Spacing, feet - 10000	400	400
Pole Spacing, feet - 0	250	250	Copper Buried Installation per foot - 0	1.77	1.77
Pole Spacing, feet - 5	250	250	Copper Buried Installation per foot - 5	1.77	1.77
Pole Spacing, feet - 100	200	200	Copper Buried Installation per foot - 100	1.77	1.77
Pole Spacing, feet - 200	200	200	Copper Buried Installation per foot - 200	1.93	1.93
Pole Spacing, feet - 650	175	175	Copper Buried Installation per foot - 650	2.17	2.17
Pole Spacing, feet - 850	175	175	Copper Buried Installation per foot - 850	3.54	3.54

Hatfield Model Release 3.1
Staff Proposed Inputs

Distribution Input	Current Scenario Value	Default Scenario Value
Pole Spacing, feet - 2550	150	150
Pole Spacing, feet - 5000	150	150
Pole Spacing, feet - 10000	150	150
Drop Distance, feet - 0	150	150
Drop Distance, feet - 5	150	150
Drop Distance, feet - 100	100	100
Drop Distance, feet - 200	100	100
Drop Distance, feet - 650	50	50
Drop Distance, feet - 850	50	50
Drop Distance, feet - 2550	50	50
Drop Distance, feet - 5000	50	50
Drop Distance, feet - 10000	50	50
Aerial Drop Placement (total) - 0	58.33	58.33
Aerial Drop Placement (total) - 5	58.33	58.33
Aerial Drop Placement (total) - 100	46.67	46.67
Aerial Drop Placement (total) - 200	35.00	35.00
Aerial Drop Placement (total) - 650	23.33	23.33
Aerial Drop Placement (total) - 850	11.67	11.67
Aerial Drop Placement (total) - 2550	11.67	11.67
Aerial Drop Placement (total) - 5000	11.67	11.67
Aerial Drop Placement (total) - 10000	11.67	11.67
Buried Drop Placement (total) - 0	0.75	0.75
Buried Drop Placement (total) - 5	0.75	0.75
Buried Drop Placement (total) - 100	0.75	0.75
Buried Drop Placement (total) - 200	0.75	0.75
Buried Drop Placement (total) - 650	0.75	0.75
Buried Drop Placement (total) - 850	0.75	0.75
Buried Drop Placement (total) - 2550	1.13	1.13
Buried Drop Placement (total) - 5000	1.50	1.50
Buried Drop Placement (total) - 10000	5.00	5.00
Buried Drop Placement Fraction - 0	1.00	1.00
Buried Drop Placement Fraction - 5	1.00	1.00
Buried Drop Placement Fraction - 100	1.00	1.00
Buried Drop Placement Fraction - 200	1.00	1.00
Buried Drop Placement Fraction - 650	1.00	1.00
Buried Drop Placement Fraction - 850	1.00	1.00
Buried Drop Placement Fraction - 2550	1.00	1.00
Buried Drop Placement Fraction - 5000	1.00	1.00
Buried Drop Placement Fraction - 10000	1.00	1.00
Buried Drop Fraction - 0	0.75	0.75
Buried Drop Fraction - 5	0.75	0.75
Buried Drop Fraction - 100	0.75	0.75
Buried Drop Fraction - 200	0.70	0.70
Buried Drop Fraction - 650	0.70	0.70
Buried Drop Fraction - 850	0.70	0.70
Buried Drop Fraction - 2550	0.70	0.70
Buried Drop Fraction - 5000	0.40	0.40
Buried Drop Fraction - 10000	0.15	0.15
Pole Investment	** **	201.00
Pole Labor	** **	216.00
Buried Cable Jacketing Multiplier	1.04	1.04
Conduit Investment per foot	0.60	0.60

Feeder Input	Current Scenario Value	Default Scenario Value
Copper Buried Installation per foot - 2550	4.27	4.27
Copper Buried Installation per foot - 5000	13.00	13.00
Copper Buried Installation per foot - 10000	45.00	45.00
Copper Conduit Installation per foot - 0	10.29	10.29
Copper Conduit Installation per foot - 5	10.29	10.29
Copper Conduit Installation per foot - 100	10.29	10.29
Copper Conduit Installation per foot - 200	11.35	11.35
Copper Conduit Installation per foot - 650	11.38	11.38
Copper Conduit Installation per foot - 850	16.40	16.40
Copper Conduit Installation per foot - 2550	21.60	21.60
Copper Conduit Installation per foot - 5000	50.10	50.10
Copper Conduit Installation per foot - 10000	75.00	75.00
Fiber Aerial Fraction - 0	-	0.35
Fiber Aerial Fraction - 5	-	0.35
Fiber Aerial Fraction - 100	-	0.35
Fiber Aerial Fraction - 200	-	0.30
Fiber Aerial Fraction - 650	-	0.30
Fiber Aerial Fraction - 850	-	0.20
Fiber Aerial Fraction - 2550	-	0.15
Fiber Aerial Fraction - 5000	-	0.10
Fiber Aerial Fraction - 10000	-	0.05
Fiber Buried Fraction - 0	0.80	0.60
Fiber Buried Fraction - 5	0.80	0.60
Fiber Buried Fraction - 100	0.55	0.60
Fiber Buried Fraction - 200	0.14	0.60
Fiber Buried Fraction - 650	0.14	0.30
Fiber Buried Fraction - 850	0.14	0.20
Fiber Buried Fraction - 2550	0.14	0.10
Fiber Buried Fraction - 5000	0.14	0.05
Fiber Buried Fraction - 10000	0.14	0.05
Fiber Manhole Spacing, feet - 0	2,000	2,000
Fiber Manhole Spacing, feet - 5	2,000	2,000
Fiber Manhole Spacing, feet - 100	2,000	2,000
Fiber Manhole Spacing, feet - 200	2,000	2,000
Fiber Manhole Spacing, feet - 650	2,000	2,000
Fiber Manhole Spacing, feet - 850	2,000	2,000
Fiber Manhole Spacing, feet - 2550	2,000	2,000
Fiber Manhole Spacing, feet - 5000	2,000	2,000
Fiber Manhole Spacing, feet - 10000	2,000	2,000
Fiber Buried Installation per foot - 0	1.77	1.77
Fiber Buried Installation per foot - 5	1.77	1.77
Fiber Buried Installation per foot - 100	1.77	1.77
Fiber Buried Installation per foot - 200	1.93	1.93
Fiber Buried Installation per foot - 650	2.17	2.17
Fiber Buried Installation per foot - 850	3.54	3.54
Fiber Buried Installation per foot - 2550	4.27	4.27
Fiber Buried Installation per foot - 5000	13.00	13.00
Fiber Buried Installation per foot - 10000	45.00	45.00
Fiber Conduit Installation per foot - 0	10.29	10.29
Fiber Conduit Installation per foot - 5	10.29	10.29
Fiber Conduit Installation per foot - 100	10.29	10.29
Fiber Conduit Installation per foot - 200	11.35	11.35

Hatfield Model Release 3.1
Staff Proposed Inputs

Distribution Input	Current Scenario Value	Default Scenario Value
Spare Tubes per route	1.00	1.00
Regional Labor Adjustment Factor	1.00	1.00
Residential NID case, no protector	10.00	10.00
Residential NID basic labor	15.00	15.00
Maximum lines per NID	6.00	6.00
Residential Protection Block, per pair	4.00	4.00
Business NID case, no protector	25.00	25.00
Business NID basic labor	15.00	15.00
Business Protection Block, per pair	4.00	4.00
Average Lines per business location	4.00	4.00
Terminal and Splice per line, buried	42.50	42.50
Terminal and Splice per line, aerial	32.00	32.00
Drop cable investment per foot buried	0.14	0.14
Drop cable buried pairs	3.00	3.00
Drop cable investment per foot aerial	0.10	0.10
Drop cable aerial pairs	2.00	2.00
TR-303 DLC Site and Power	3,000.00	3,000.00
TR-303 DLC Maximum Lines/Increment	672	672
TR-303 DLC RT Fill Factor	0.85	0.90
TR-303 DLC Basic Common Eqpt Invest + initial lines	66,000.00	66,000.00
TR-303 DLC POTS Channel Unit Investment	310.00	310.00
TR-303 DLC POTS Lines per CU	4.00	4.00
TR-303 DLC Coin Channel Unit Investment	250.00	250.00
TR-303 DLC Coin Lines per CU	2.00	2.00
TR-303 DLC 303/LD crossover, lines	384.00	384.00
TR-303 DLC Fibers per RT	4.00	4.00
TR-303 DLC Optical Patch Panel	1,000.00	1,000.00
TR-303 DLC Copper Feeder Max Distance, ft	15,000.00	9,000.00
TR-303 DLC Common Eqpt Invest per additional 672 lines	18,500.00	18,500.00
TR-303 DLC Maximum Number of additional line modules/RT	2.00	2.00
Low Density DLC Site and Power	2,500.00	2,500.00
Low Density DLC Maximum Lines/Increment	96.00	96.00
Low Density DLC RT Fill Factor	0.85	0.90
Low Density DLC Basic Common Eqpt Invest + initial lines	13,000.00	13,000.00
Low Density DLC POTS Channel Unit Investment	310.00	310.00
Low Density DLC POTS Lines per CU	4.00	4.00
Low Density DLC Coin Channel Unit Investment	250.00	250.00
Low Density DLC Coin Lines per CU	2.00	2.00
Low Density DLC Fibers per RT	4.00	4.00
Low Density DLC Optical Patch Panel	1,000.00	1,000.00
Low Density DLC Common Eqpt Invest per additional 96 lines	11,000.00	11,000.00
Low Density DLC Maximum Number of additional line modules/R	1.00	1.00
Long Loop Loading Adjustment per line 1	-	-
Long Loop Loading Adjustment per line 2	20.00	20.00
Long Loop Loading Adjustment per line 3	40.00	40.00
Long Loop Loading Adjustment per line 4	75.00	75.00
Long Loop Loading Adjustment per line 5	110.00	110.00
Long Loop Loading Adjustment per line 6	175.00	175.00
Long Loop Cable Investment Adjustment 1	1.00	1.00
Long Loop Cable Investment Adjustment 2	1.36	1.36
Long Loop Cable Investment Adjustment 3	2.55	2.55
Long Loop Cable Investment Adjustment 4	2.55	2.55

Feeder Input	Current Scenario Value	Default Scenario Value
Fiber Conduit Installation per foot - 650	11.38	11.38
Fiber Conduit Installation per foot - 850	16.40	16.40
Fiber Conduit Installation per foot - 2550	21.60	21.60
Fiber Conduit Installation per foot - 5000	50.10	50.10
Fiber Conduit Installation per foot - 10000	75.00	75.00
Fiber Feeder Investment per foot - 216	13.10	13.10
Fiber Feeder Investment per foot - 144	9.50	9.50
Fiber Feeder Investment per foot - 96	7.10	7.10
Fiber Feeder Investment per foot - 72	5.90	5.90
Fiber Feeder Investment per foot - 60	5.30	5.30
Fiber Feeder Investment per foot - 48	4.70	4.70
Fiber Feeder Investment per foot - 36	4.10	4.10
Fiber Feeder Investment per foot - 24	3.50	3.50
Fiber Feeder Investment per foot - 18	3.20	3.20
Fiber Feeder Investment per foot - 12	2.90	2.90
Copper Feeder Investment per foot - 4200	74.25	74.25
Copper Feeder Investment per foot - 3600	63.75	63.75
Copper Feeder Investment per foot - 3000	53.25	53.25
Copper Feeder Investment per foot - 2400	42.75	42.75
Copper Feeder Investment per foot - 1800	32.25	32.25
Copper Feeder Investment per foot - 1200	21.75	21.75
Copper Feeder Investment per foot - 900	16.50	16.50
Copper Feeder Investment per foot - 600	11.25	11.25
Copper Feeder Investment per foot - 400	7.75	7.75
Copper Feeder Investment per foot - 200	4.25	4.25
Copper Feeder Investment per foot - 100	2.50	2.50
Buried Copper Cable Sheath Multiplier	1.04	1.04
Buried Fiber Sheath Addition per foot	0.20	0.20
Pole Materials	** **	201.00
Pole Labor	** **	216.00
Conduit Material Investment per foot	0.60	0.60
Inner Duct Investment per foot	0.30	0.30
Spare Tubes per section	1.00	1.00
Regional Labor Multiplier	1.00	1.00
Pole Spacing, feet - 0	250	250
Pole Spacing, feet - 5	250	250
Pole Spacing, feet - 100	200	200
Pole Spacing, feet - 200	200	200
Pole Spacing, feet - 650	175	175
Pole Spacing, feet - 850	175	175
Pole Spacing, feet - 2550	150	150
Pole Spacing, feet - 5000	150	150
Pole Spacing, feet - 10000	150	150
Copper Manhole Materials - 0	1,865.00	1,865.00
Copper Manhole Materials - 5	1,865.00	1,865.00
Copper Manhole Materials - 100	1,865.00	1,865.00
Copper Manhole Materials - 200	1,865.00	1,865.00
Copper Manhole Materials - 650	1,865.00	1,865.00
Copper Manhole Materials - 850	1,865.00	1,865.00
Copper Manhole Materials - 2550	1,865.00	1,865.00
Copper Manhole Materials - 5000	1,865.00	1,865.00
Copper Manhole Materials - 10000	1,865.00	1,865.00

Hatfield Model Release 3.1
Staff Proposed Inputs

Distribution Input	Current Scenario Value	Default Scenario Value
Long Loop Cable Investment Adjustment 5	13.07	13.07
Long Loop Cable Investment Adjustment 6	13.07	13.07
Long Loop DLC CU Adjustment 1	1.00	1.00
Long Loop DLC CU Adjustment 2	1.00	1.00
Long Loop DLC CU Adjustment 3	1.00	1.00
Long Loop DLC CU Adjustment 4	1.25	1.25
Long Loop DLC CU Adjustment 5	1.00	1.00
Long Loop DLC CU Adjustment 6	1.25	1.25
Distribution Cable Size 1	2,400	2,400
Distribution Cable Size 2	1,800	1,800
Distribution Cable Size 3	1,200	1,200
Distribution Cable Size 4	900	900
Distribution Cable Size 5	600	600
Distribution Cable Size 6	400	400
Distribution Cable Size 7	200	200
Distribution Cable Size 8	100	100
Distribution Cable Size 9	50	50
Distribution Cable Size 10	25	25
Distribution Cable Size 11	12	12
Distribution Cable Size 12	6	6
Distribution Cable Investment per foot 1	42.75	42.75
Distribution Cable Investment per foot 2	32.25	32.25
Distribution Cable Investment per foot 3	21.75	21.75
Distribution Cable Investment per foot 4	16.50	16.50
Distribution Cable Investment per foot 5	11.25	11.25
Distribution Cable Investment per foot 6	7.75	7.75
Distribution Cable Investment per foot 7	4.25	4.25
Distribution Cable Investment per foot 8	2.50	2.50
Distribution Cable Investment per foot 9	1.63	1.63
Distribution Cable Investment per foot 10	1.19	1.19
Distribution Cable Investment per foot 11	0.76	0.76
Distribution Cable Investment per foot 12	0.63	0.63
Distribution Riser Cable Size 1	2,400	2,400
Distribution Riser Cable Size 2	1,800	1,800
Distribution Riser Cable Size 3	1,200	1,200
Distribution Riser Cable Size 4	900	900
Distribution Riser Cable Size 5	600	600
Distribution Riser Cable Size 6	400	400
Distribution Riser Cable Size 7	200	200
Distribution Riser Cable Size 8	100	100
Distribution Riser Cable Size 9	50	50
Distribution Riser Cable Size 10	25	25
Distribution Riser Cable Size 11	12	12
Distribution Riser Cable Size 12	6	6
Distribution Riser Cable Investment per foot 1	42.75	42.75
Distribution Riser Cable Investment per foot 2	32.25	32.25
Distribution Riser Cable Investment per foot 3	21.75	21.75
Distribution Riser Cable Investment per foot 4	16.50	16.50
Distribution Riser Cable Investment per foot 5	11.25	11.25
Distribution Riser Cable Investment per foot 6	7.75	7.75
Distribution Riser Cable Investment per foot 7	4.25	4.25
Distribution Riser Cable Investment per foot 8	2.50	2.50
Distribution Riser Cable Investment per foot 9	1.63	1.63

Feeder Input	Current Scenario Value	Default Scenario Value
Copper Manhole Frame and Cover - 0	350.00	350.00
Copper Manhole Frame and Cover - 5	350.00	350.00
Copper Manhole Frame and Cover - 100	350.00	350.00
Copper Manhole Frame and Cover - 200	350.00	350.00
Copper Manhole Frame and Cover - 650	350.00	350.00
Copper Manhole Frame and Cover - 850	350.00	350.00
Copper Manhole Frame and Cover - 2550	350.00	350.00
Copper Manhole Frame and Cover - 5000	350.00	350.00
Copper Manhole Frame and Cover - 10000	350.00	350.00
Copper Manhole Site Delivery - 0	125.00	125.00
Copper Manhole Site Delivery - 5	125.00	125.00
Copper Manhole Site Delivery - 100	125.00	125.00
Copper Manhole Site Delivery - 200	125.00	125.00
Copper Manhole Site Delivery - 650	125.00	125.00
Copper Manhole Site Delivery - 850	125.00	125.00
Copper Manhole Site Delivery - 2550	125.00	125.00
Copper Manhole Site Delivery - 5000	125.00	125.00
Copper Manhole Site Delivery - 10000	125.00	125.00
Copper Manhole Excavate and Backfill - 0	2,800.00	2,800.00
Copper Manhole Excavate and Backfill - 5	2,800.00	2,800.00
Copper Manhole Excavate and Backfill - 100	2,800.00	2,800.00
Copper Manhole Excavate and Backfill - 200	2,800.00	2,800.00
Copper Manhole Excavate and Backfill - 650	3,200.00	3,200.00
Copper Manhole Excavate and Backfill - 850	3,500.00	3,500.00
Copper Manhole Excavate and Backfill - 255(	3,500.00	3,500.00
Copper Manhole Excavate and Backfill - 500(	5,000.00	5,000.00
Copper Manhole Excavate and Backfill - 100(	5,000.00	5,000.00
Fiber Pullbox Materials - 0	280.00	280.00
Fiber Pullbox Materials - 5	280.00	280.00
Fiber Pullbox Materials - 100	280.00	280.00
Fiber Pullbox Materials - 200	280.00	280.00
Fiber Pullbox Materials - 650	280.00	280.00
Fiber Pullbox Materials - 850	280.00	280.00
Fiber Pullbox Materials - 2550	280.00	280.00
Fiber Pullbox Materials - 5000	280.00	280.00
Fiber Pullbox Materials - 10000	280.00	280.00
Fiber Pullbox Installation - 0	220.00	220.00
Fiber Pullbox Installation - 5	220.00	220.00
Fiber Pullbox Installation - 100	220.00	220.00
Fiber Pullbox Installation - 200	220.00	220.00
Fiber Pullbox Installation - 650	220.00	220.00
Fiber Pullbox Installation - 850	220.00	220.00
Fiber Pullbox Installation - 2550	220.00	220.00
Fiber Pullbox Installation - 5000	220.00	220.00
Fiber Pullbox Installation - 10000	220.00	220.00

Hatfield Model Release 3.1
Staff Proposed Inputs

Distribution Input	Current Scenario Value	Default Scenario Value
Distribution Riser Cable Investment per foot 10	1.19	1.19
Distribution Riser Cable Investment per foot 11	0.76	0.76
Distribution Riser Cable Investment per foot 12	0.63	0.63
Distance Multiplier for difficult terrain	1.20	1.20
Rock Depth Threshold, inches	24.00	24.00
Hard Rock Placement Multiplier	3.50	3.50
Soft Rock Placement Multiplier	2.00	2.00
Difficult Surface Multiplier	1.00	1.00
Sidewalk/Street Fraction	0.20	0.20
Local RT - Maximum Total Distance	18,000	18,000
Town Factor	0.85	0.85
Maximum Lot Size, acres	3.00	3.00
Town Lot Size, acres	3.00	3.00
SAI Cable Size 1	2,400	2,400
SAI Cable Size 2	1,800	1,800
SAI Cable Size 3	1,200	1,200
SAI Cable Size 4	900	900
SAI Cable Size 5	600	600
SAI Cable Size 6	400	400
SAI Cable Size 7	200	200
SAI Cable Size 8	100	100
SAI Cable Size 9	50	50
SAI Cable Size 10	25	25
SAI Cable Size 11	12	12
SAI Cable Size 12	6	6
SAI Indoor Investment 1	1,052.00	1,052.00
SAI Indoor Investment 2	864.00	864.00
SAI Indoor Investment 3	576.00	576.00
SAI Indoor Investment 4	432.00	432.00
SAI Indoor Investment 5	288.00	288.00
SAI Indoor Investment 6	192.00	192.00
SAI Indoor Investment 7	96.00	96.00
SAI Indoor Investment 8	48.00	48.00
SAI Indoor Investment 9	48.00	48.00
SAI Indoor Investment 10	48.00	48.00
SAI Indoor Investment 11	48.00	48.00
SAI Indoor Investment 12	48.00	48.00
SAI Outdoor Investment 1	4,469.00	4,469.00
SAI Outdoor Investment 2	3,569.00	3,569.00
SAI Outdoor Investment 3	2,610.00	2,610.00
SAI Outdoor Investment 4	2,028.00	2,028.00
SAI Outdoor Investment 5	1,500.00	1,500.00
SAI Outdoor Investment 6	1,071.00	1,071.00
SAI Outdoor Investment 7	902.00	902.00
SAI Outdoor Investment 8	642.00	642.00
SAI Outdoor Investment 9	300.00	300.00
SAI Outdoor Investment 10	250.00	250.00
SAI Outdoor Investment 11	250.00	250.00
SAI Outdoor Investment 12	250.00	250.00

Feeder Input	Current Scenario Value	Default Scenario Value

Hatfield Model Release 3.1
Staff Proposed Inputs

Switching Input	Current Scenario Value	Default Scenario Value
Constant EO Switching Investment Term, small ICO	416.11	416.11
Constant EO Switching Investment Term, BOC and large ICO	242.73	242.73
Switch Capacity Real-Time (BHCA) - 1	10,000	10,000
Switch Capacity Real-Time (BHCA) - 2	50,000	50,000
Switch Capacity Real-Time (BHCA) - 3	200,000	200,000
Switch Capacity Real-Time (BHCA) - 4	600,000	600,000
Switch Capacity Traffic (BHCCS) - 1	30,000	30,000
Switch Capacity Traffic (BHCCS) - 2	150,000	150,000
Switch Capacity Traffic (BHCCS) - 3	600,000	600,000
Switch Capacity Traffic (BHCCS) - 4	1,800,000	1,800,000
Initial Switch Maximum Equipped Line Size	80,000	80,000
Switch Port Administrative Fill	0.98	0.98
Switch Maximim Processor Occupancy	0.90	0.90
Processor Feature Loading Multiplier - normal	1.20	1.20
Processor Feature Loading Multiplier - heavy business	2.00	2.00
Processor Feature Loading Multiplier - business penetration threshold	0.30	0.30
MDF/Protector Investment per line	17.50	17.50
Analog Line Circuit Offset for DLC lines, per line	5.00	5.00
Switch Installation Multiplier	1.10	1.10
Operator Traffic Fraction	0.02	0.02
Total Interoffice Traffic Fraction	0.65	0.65
Maximum Trunk Occupancy, CCS	** **	27.50
Trunk Port, per end	100.00	100.00
Entrance Facility Distance, miles	0.50	0.50
Direct-routed Fraction of Local Interoffice	0.98	0.98
POPs per Tandem Location	5.00	5.00
Tandem-routed Fraction of Total IntraLATA Traffic	0.20	0.20
Tandem-routed Fraction of Total InterLATA Traffic	0.20	0.20
Local Call Attempts	** **	9,394,922
Call Completion Factor	0.70	0.70
IntraLATA Calls Completed	** **	177,143
InterLATA intrastate Calls Completed	** **	166,009
InterLATA interstate Calls Completed	** **	739,623
Local DEMs, thousands	** **	37,570,456
Intrastate DEMs, thousands	** **	3,468,219
Interstate DEMs, thousands	** **	7,107,428
Local Business/Residence DEMs	1.10	1.10
Intrastate Business/Residence DEMs	2.00	2.00
Interstate Business/Residence DEMs	3.00	3.00
BH Fraction of Daily Usage	0.10	0.10
Annual to Daily Usage Reduction Factor	** **	270.00
Residential Holding Time Multiplier	1.00	1.00
Business Holding Time Multiplier	1.00	1.00
Residential Call Attempts per BH	1.30	1.30
Business Call Attempts per BH	3.50	3.50
ICO STP Investment, per line (equipment)	5.50	5.50
ICO Local Tandem Investment, per line	1.90	1.90
ICO OS Tandem Investment, per line	0.80	0.80
ICO SCP Investment per line (equipment)	2.50	2.50
ICO SCP - STP per line (wirecenter)	0.40	0.40
ICO Local Tandem Investment, per line (wirecenter)	2.50	2.50

Expense Input	Current Scenario Value	Default Scenario Value
Cost of Debt	0.076	0.077
Debt Fraction	0.420	0.450
Cost of Equity	0.124	0.119
Average Trunk Utilization	0.300	0.300
Tax Rate	0.384	0.393
Corporate Overhead Factor	0.165	0.104
Other Taxes Factor	** **	0.050
Billing/Bill Inquiry per line per month	1.220	1.220
Directory Listing per line per month	0.150	0.150
Forward-looking Network Operations Factor	1.000	0.500
Alternative CO Switching Factor	0.027	0.027
Alternative Circuit Equipment Factor	0.015	0.015
EO Traffic Sensitive Fraction	0.700	0.700
Monthly LNP cost, per line	0.250	0.250
Carrier to Carrier Customer Service, per line per y	1.69	1.69
NID Expense per line per year	1.00	1.00
DS-0/DS-1 Terminal Factor	12.4	12.4
DS-1/DS-3 Terminal Factor	9.9	9.9
Average Lines per Business Location	4	4
Distribution Aerial Fraction - 0	0.44	0.50
Distribution Aerial Fraction - 5	0.40	0.33
Distribution Aerial Fraction - 100	0.40	0.25
Distribution Aerial Fraction - 200	0.40	0.25
Distribution Aerial Fraction - 650	0.40	0.25
Distribution Aerial Fraction - 850	0.40	0.25
Distribution Aerial Fraction - 2550	0.40	0.25
Distribution Aerial Fraction - 5000	0.40	0.25
Distribution Aerial Fraction - 10000	0.40	0.25
Distribution Buried Fraction - 0	1.00	0.33
Distribution Buried Fraction - 5	0.33	0.33
Distribution Buried Fraction - 100	0.33	0.33
Distribution Buried Fraction - 200	0.33	0.33
Distribution Buried Fraction - 650	0.33	0.33
Distribution Buried Fraction - 850	0.33	0.33
Distribution Buried Fraction - 2550	0.33	0.33
Distribution Buried Fraction - 5000	0.33	0.33
Distribution Buried Fraction - 10000	0.33	0.33
Distribution Underground Fraction - 0	0.99	1.00
Distribution Underground Fraction - 5	0.99	0.50
Distribution Underground Fraction - 100	0.99	0.50
Distribution Underground Fraction - 200	0.99	0.50
Distribution Underground Fraction - 650	0.99	0.40
Distribution Underground Fraction - 850	0.99	0.33
Distribution Underground Fraction - 2550	0.99	0.33
Distribution Underground Fraction - 5000	0.99	0.33
Distribution Underground Fraction - 10000	0.99	0.33
Feeder Aerial Fraction - 0	0.40	0.50
Feeder Aerial Fraction - 5	0.40	0.33
Feeder Aerial Fraction - 100	0.40	0.25
Feeder Aerial Fraction - 200	0.40	0.25
Feeder Aerial Fraction - 650	0.40	0.25

Hatfield Model Release 3.1
Staff Proposed Inputs

Switching Input	Current Scenario Value	Default Scenario Value
ICO OS Tandem Investment, per line (wirecenter)	1.00	1.00
ICO Tandem A Links and C Links per line (wirecenter)	0.30	0.30
Real-time Limit, BHCA	750,000	750,000
Port Limit, trunks	100,000	100,000
Common Equipment Investment	1,000,000	1,000,000
Maximum Port Fill	0.90	0.90
Maximum Real-time Occupancy	** **	0.90
Common Equipment Intercept Factor	0.50	0.50
STP Link Capacity	720	720
STP Maximum Link Fill	0.80	0.80
Maximum STP Investment, per pair	5,000,000	5,000,000
Minimum STP Investment, per pair	1,000,000	1,000,000
Link Termination, both ends	900	900
Signaling Link Bit Rate	56,000	56,000
Link Occupancy	0.40	0.40
C Link Cross Section	24.00	24.00
ISUP Messages per Interoffice BHCA	6.00	6.00
ISUP Message Length, bytes	25.00	25.00
TCAP Messages per transaction	2.00	2.00
TCAP Message length, bytes	100.00	100.00
Fraction of BHCA requiring TCAP	0.10	0.10
SCP Investment/Transaction/Second	20,000	20,000
Operator Investment per position	6,400	6,400
Operator Maximum Utilization, per position, CCS	32	32
Operator Intervention Factor	10	10
Public Telephone Investment, per station	760	760
Lot Size, Multiplier of Switch Room Size	2	2
Tandem/EO Wire Center Common Factor	0.40	0.40
Power 1	5,000	5,000
Power 2	10,000	10,000
Power 3	20,000	20,000
Power 4	50,000	50,000
Power 5	250,000	250,000
Switch Room Size, sq ft 1	500	500
Switch Room Size, sq ft 2	1,000	1,000
Switch Room Size, sq ft 3	2,000	2,000
Switch Room Size, sq ft 4	5,000	5,000
Switch Room Size, sq ft 5	10,000	10,000
Construction, sq ft 1	75.00	75.00
Construction, sq ft 2	85.00	85.00
Construction, sq ft 3	100.00	100.00
Construction, sq ft 4	125.00	125.00
Construction, sq ft 5	150.00	150.00
Land, sq ft 1	5	5
Land, sq ft 2	8	8
Land, sq ft 3	10	10
Land, sq ft 4	15	15
Land, sq ft 5	20	20
OC-48 ADM, installed, 48 DS-3s	50,000	50,000
OC-48 ADM, installed, 12 DS-3s	40,000	40,000
OC-3/DS-1 Terminal Multiplexer, installed, 84 DS-1s	26,000	26,000
Investment per 7 DS-1s	500	500

Expense Input	Current Scenario Value	Default Scenario Value
Feeder Aerial Fraction - 850	0.40	0.25
Feeder Aerial Fraction - 2550	0.40	0.25
Feeder Aerial Fraction - 5000	0.40	0.25
Feeder Aerial Fraction - 10000	0.40	0.25
Feeder Underground Fraction - 0	0.99	0.50
Feeder Underground Fraction - 5	0.99	0.50
Feeder Underground Fraction - 100	0.99	0.40
Feeder Underground Fraction - 200	0.99	0.33
Feeder Underground Fraction - 650	0.99	0.33
Feeder Underground Fraction - 850	0.99	0.33
Feeder Underground Fraction - 2550	0.99	0.33
Feeder Underground Fraction - 5000	0.99	0.33
Feeder Underground Fraction - 10000	0.99	0.33
Feeder Buried Fraction - 0	1.00	0.40
Feeder Buried Fraction - 5	1.00	0.40
Feeder Buried Fraction - 100	1.00	0.40
Feeder Buried Fraction - 200	1.00	0.40
Feeder Buried Fraction - 650	1.00	0.40
Feeder Buried Fraction - 850	1.00	0.40
Feeder Buried Fraction - 2550	1.00	0.40
Feeder Buried Fraction - 5000	1.00	0.40
Feeder Buried Fraction - 10000	1.00	0.40
Motor Vehicles	9.06	9.16
Garage Work Equipment	11.40	11.47
Other Work Equipment	15.50	13.22
Buildings	39.60	48.99
Furniture	16.10	16.56
Office Support Equipment	11.00	11.25
Company Comm. Equipment	8.30	7.59
General Purpose Computer	7.30	6.24
Digital Electronic Switching	9.80	16.54
Operator Systems	14.00	9.94
Digital Circuit Equipment	9.70	10.09
Public Telephone Terminal Equipment	8.00	8.01
Poles	8.40	16.13
Aerial Cable - metallic	9.40	16.80
Aerial Cable - non metallic	22.11	22.11
Underground Cable - metallic	12.80	21.17
Underground Cable - non metallic	24.50	22.87
Buried - metallic	14.20	19.86
Buried - non metallic	19.40	24.13
Intrabuilding Cable - metallic	16.50	15.64
Intrabuilding Cable - non metallic	16.50	23.65
Conduit Systems	41.60	51.35

Hatfield Model Release 3.1
Staff Proposed Inputs

Switching Input	Current Scenario Value	Default Scenario Value
Number of Fibers	24	24
Pigtrails, per strand	60	60
Optical Distribution Panel	1,000	1,000
EF&I, per hour	55	55
EF&I hours	32	32
Regional Labor Factor	1	1
Channel Bank Investment, per 24 lines	5,000	5,000
Fraction of SA Lines Requiring Multiplexing	0.50	0.50
Regenerator, installed	15,000	15,000
Regenerator spacing, miles	40	40
DCS installed, per DS-3	30,000	30,000
Transmission Terminal Fill (DS-0 level)	0.90	0.90
Fiber Investment, fiber cable	3.50	3.50
Fiber Investment, number of strands per ADM	4.00	4.00
Fiber Investment, buried fraction	0.60	0.60
Fiber Investment, buried placement	1.77	1.77
Fiber Investment, buried sheath addition	0.20	0.20
Fiber Investment, conduit	0.60	0.60
Fiber Investment, spare tubes per route	1.00	1.00
Fiber Investment, conduit placement	16.40	16.40
Fiber Investment, pullbox spacing	2,000.00	2,000.00
Fiber Investment, pullbox investsment	500.00	500.00
Fiber Investment, aerial fraction	0.20	0.20
Fiber Investment, pole spacing, feet	150.00	150.00
Fiber Investment, pole material	201.00	201.00
Fiber Investment, pole labor (basic)	216.00	216.00
Fraction Poles and Buried/Underground Placement Common with Fee	0.75	0.75
Fraction of Aerial Structure Assigned to Telephone	0.44	0.33
Fraction of Buried Structure Assigned to Telephone	1.00	0.33
Fraction of Underground Structure Assigned to Telephone	1.00	0.33

Expense Input	Current Scenario Value	Default Scenario Value