Demographic and geological parameters are obtained from a database developed by PNR and Associates of Jenkintown, Pa. Appendix A explains in detail how these data were derived. Highlights of the development process are as follows.

PNR's estimates of residential lines per CBG are based on the number of households in each CBG, using 1995 census estimates provided by Claritas and current Donnelley Marketing household data. These household counts were adjusted to reflect first and second telephone line penetration rates. The percent of households without telephones was obtained from the 1990 Census for every CBG. Second residential lines were estimated as functions of CBG demographic information. The results were projected to every CBG in the United States using census age and income distributions, and to every Census Block (CB) within a CBG using census household data at the CB level. The total computed number of residential access lines at the state level was constrained to be consistent with the number of residential access lines reported by the ILEC to the FCC. In HM 4.0, the consistency can be imposed at the wire center level if the requisite information is provided by the ILEC

PNR geocoded the entire Donnelley DQI database of approximately 95 million household street addresses and telephone numbers with latitude/longitude values and their CB codes. A similar geocoding was done of the roughly 10 million businesses listed in the Dun & Bradstreet (D&B) database. Based on these geocoded customer locations and telephone numbers, a correspondence table was created to link each CB to an appropriate wire center based on telephone number "NPA-NXX".[18] When multiple wire centers served a CBG, the wire center serving the plurality of customers was selected.

Business lines, including Centrex lines, were estimated by PNR through the use of a business line model. This model used customer survey results combined with information on Standard Industry Classification (SIC) codes, number of employees, region, and legal status to develop detailed telecommunications-use profiles for all business categories considered in the model. The results of this model were then used to estimate the number and types of business lines for each firm listed in the D&B database.

Using the business establishment geocodes and the CB to wire center correspondence table, the number of access lines of each firm within a CB or CBG was aggregated to obtain an estimate of the total number of business access lines within each wire center. The total number of business access lines, including Centrex lines, at the state level was further constrained to be consistent

[18] That is, the first six digits of the 10-digit number assigned to customers.

with the number of business access lines reported to the FCC. In HM 4.0, the consistency can be imposed at the wire center level if the requisite information is provided by the ILEC.

The database resulting from the process is organized by state and telephone company (study area). Each CBG appears as a separate record in a Microsoft Access 7.0 database containing the following information:

- assignment of the CBG to an ILEC wire center based on the most prevalent assignment of Numbering Plan Area code and central office code (NPA-NXX) combinations to locations in that CBG;
- identity of the ILEC owning the wire center serving the CBG;
- the angle (relative to V&H "east") and radial distance of the CBG from its serving wire center;
- number and type (single family detached homes, multi-tenant units of various sizes, mobile homes, etc.) of housing units, with household counts based on an update of the U.S. Census to 1995;
- number of businesses and business employees;
- total business, residence, public and special access lines;
- percentage of the CBG's land area that is unoccupied; and
- geological parameters indicating bedrock depth, bedrock hardness, soil type, and water table depth.

### 2. Interoffice distances

Calculations to determine total route-miles of interoffice facilities require as inputs the distances between each LEC EO and the tandem switch that is assumed to serve it, the distance between the EO and the STP pair that serves it, distances between STPs, and distances between tandem offices. These data are calculated from a database licensed from Bellcore containing information from the Local Exchange Routing Guide (LERG) including the V&H (vertical and horizontal) coordinates of each switching entity, and the nature of the entity, e.g., end office, tandem, STP, multiple use, etc.

### 3. ARMIS data reported by the LECs

Access line demand data is obtained from the ARMIS 43-08 Operating Data Reports, submitted to the FCC annually by all Tier 1 LECs.[19] HM 4.0 incorporates the following data from this source:

- The number of residential access lines, including all residential switched access lines, including those with flat rate (1FR) and measured rate (1MR) service;
- the number of business access lines, including analog single business lines, analog multi-line business lines and digital business lines; these totals include flat rate business (1FB) and measured rate business (1MB) single lines, PBX trunks, Centrex lines, hotel/motel, long distance trunks and multi-line semi-public lines;[20]
- analog and digital special access lines, including dedicated lines connecting end users' premises to an IXC POP, but do not include intraLATA private lines; and
- public access lines, which include lines associated with coin (public and semi-public) phones, but exclude customer owned pay telephone lines.[21]

For companies that do not report ARMIS, HM 4.0 makes use of data reported in the FCC's 1994 Notice of Inquiry on the Universal Service Fund, and data reported by USTA and the Rural Utilities Service (RUS) to estimate line totals.

### 4. User inputs

This category comprises over 1200 user-definable values, ranging from the price of network components to the percentage of joint-use end offices and tandem offices to capital structure. HAI has supplied default values for each of these parameters based on its collective judgment, as augmented by subject matter

[19] See, Reporting Requirements for Certain Class A and Tier 1 Telephone Companies (Parts 31, 43, 67 and 69 of the FCC's Rules), CC Docket No. 86-182, 2 FCC Rcd 5770 (1987) (ARMIS Order), modified on recon., 3 FCC Rcd, 6375 (1988). Tier 1 LECs are those with more than $100 million in annual revenues from regulated services. This includes over 50 carriers.

[20] *Id.* at 1-2.

[21] *Id.* at 2.

experts in various areas of network technology, operations and economics. Users can vary these default parameters to reflect unusual local conditions. Appendix B contains a complete description of these parameters, along with the default values that have been assigned to them.

## B. COMMON ASPECTS OF THE DISTRIBUTION AND FEEDER MODULES

The Distribution and Feeder Modules compute investments in distribution and feeder facilities. Sections C and D below discuss the modules individually. This section describes several features and assumptions common to both modules.

### 1. Basic Assumptions

The following model assumptions are common to both the Distribution and Feeder Modules.

- The Hatfield Model uses CBG data as the basic demographic unit. It assumes that each CBG corresponds to one of the serving areas shown in Figure 1.
- CBGs are square.
- Wire centers serve a discrete set of CBGs, and each CBG is served by one wire center.[22]

All distribution cable is copper. Feeder cable can be either copper or fiber, depending on the criteria discussed in Section C.

### 2. Demographic Considerations

The following steps determine the appropriate layout and amount of distribution and feeder plant, based on the demographic and geographic data for the CBG contained in the PNR database:

[22] This assumption may mean that costs are overestimated because some potential efficiencies are missed, but a cost model cannot replicate fully the detailed network engineering processes that could exploit all such efficiencies.

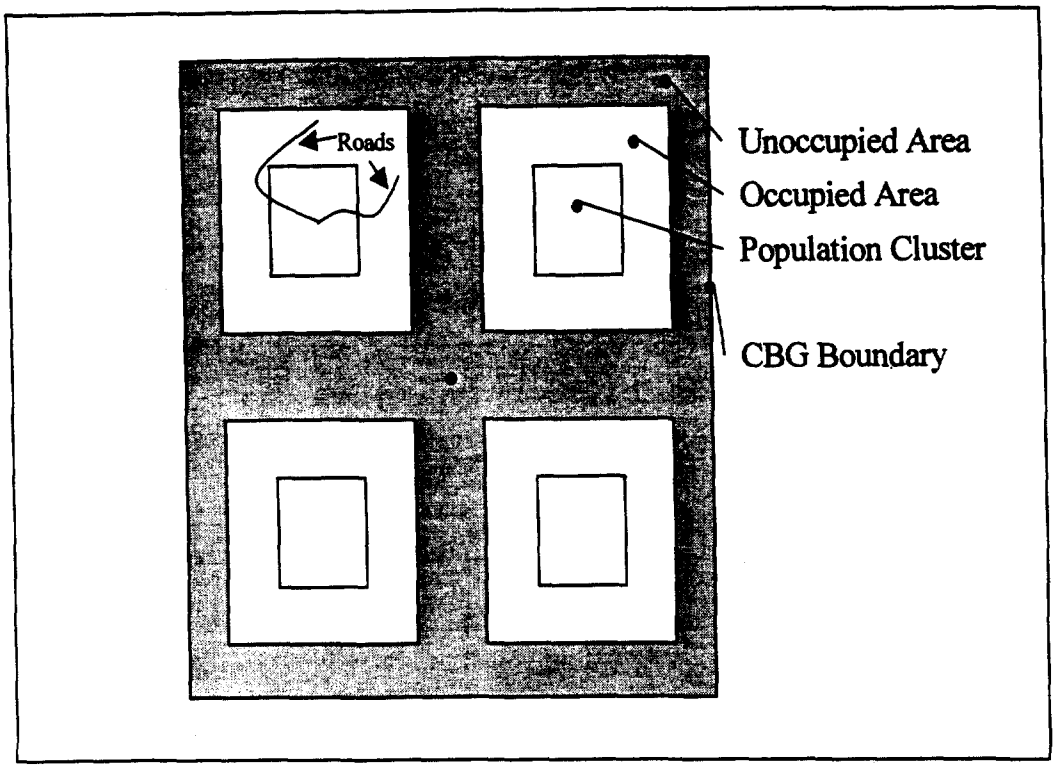


**Figure 5 CBG Demographics**

The CBG is divided into four quadrants as shown in Figure 5.

1. If the fraction of the total CBG that is empty ("unoccupied area") in Figure 5 is less than 0.5, the model locates customers in all four quadrants. If the percentage empty is greater than 50%, the model places customers in two diagonally-opposed quadrants. Henceforth, "quadrants" will refer to the two or four quadrants that are occupied.

2. Each quadrant's occupied area is reduced uniformly so that the total occupied area in all quadrants is equal to the CBG area multiplied by (one minus the fraction of the total CBG that is empty). This creates the overall "window pane" effect, shown in Figure 5, in which there is empty space both in the middle of the CBG extending vertically and horizontally from the SAI and at the edges of the CBG. Connecting cables extend from the center of the CBG to each occupied area, as shown in Figure 6.

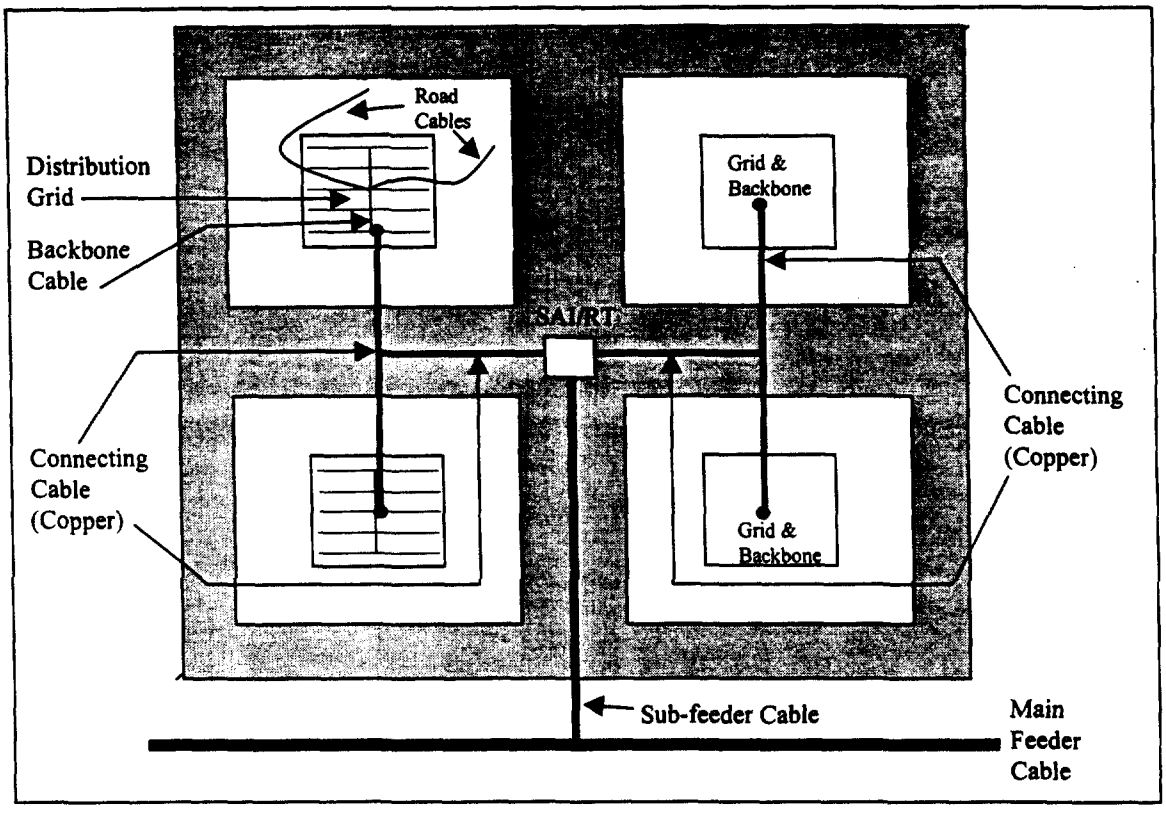


**Figure 6 Cable Layout for Copper Connecting Cable**

3. For all CBGs in density zones 1 (lowest density) to 3, and CBGs in density zones 4-9 having more than 50% empty area, a user-adjustable 85% of the customer locations are assumed to be clustered in the center of each of the quadrants. The size of each cluster is calculated assuming each customer occupies a user-adjustable plot size; the default value of the plot size is three acres. Distribution grid calculations are applied to the clusters. The remaining 15% of the customer locations are assumed to be located along paths extending throughout the remaining part of the quadrants, with each location separated from its nearest neighbor by an effective lot frontage.

The outside plant configuration serving the CBG is shown in Figures 6 and 7. More details of this configuration will be provided in the subsequent sections.

The CBG is served by a main feeder cable that passes (or may intersect) the CBG boundary. A "subfeeder" cable branches from the main cable and extends halfway into the CBG. When the feeder is a copper cable, the subfeeder cable terminates at an SAI located in the center of the CBG. For fiber feeder, the subfeeder cable terminates at an RT at the CBG center, unless the CBG is sufficiently large to require RTs in each cluster. In this case, the fiber subfeeder continues into the centers of each of the

quadrants.

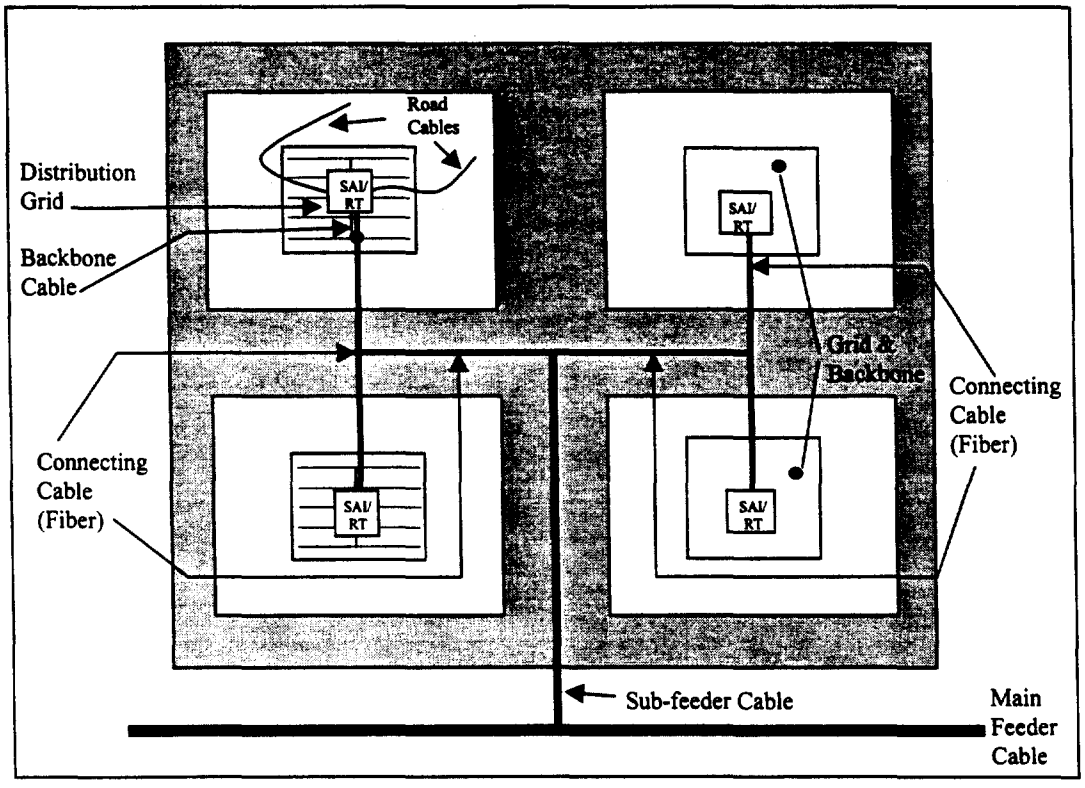


**Figure 7 Cable Layout for Fiber Connecting Cable**

If the subfeeder consists of copper pairs, or if the distances involved are limited enough that copper pairs can be used to reach the individual quadrants or clusters (see further explanation in Section IV.C.2), then the layout in Figure 6 applies. In this case, the subfeeder terminates in an SAI. The model adds SAIs if a single maximum-sized SAI would have insufficient capacity.

From the SAI, copper "connecting cables" branch out horizontally a distance of one-fourth the length of a CBG side, then vertically to serve the upper and lower quadrants. These connecting cables are classified as distribution cable because they fall on the subscriber side of the SAI . Each quadrant is served by a distribution "grid" consisting of backbone cable and side branches to reach lots at the edge of the occupied quadrant. The connecting cables join the backbone cable at a point one lot depth inside the quadrant. In the case where population subclusters, or "towns," are assumed within the occupied area, the distribution grid that serves the cluster is supplemented by cables that extend along roads outside the subcluster.

If the subfeeder cable is fiber, and if the distances to the extremities of the

occupied quadrants are such that fiber should be extended to the individual quadrants (See Section V), then fiber connecting cables, classified as feeder cable, are extended to the middle of each occupied quadrant, where they terminate in the DLC RT. The copper cables that form the backbone of the distribution grid extend from the SAI located with the RT. The "road cables" also extend from the SAI. Again, an investment in additional SAIs is included if the line demand involved is such that a single SAI will not suffice.

### 3. General Outside Plant Configuration

In configuring the outside plant portion of the local loop, the Hatfield Model duplicates procedures followed by outside plant planning engineers using the Long Range Outside Plant Planning Process (LROPP). In a classic LROPP analysis, the loop is segmented into Distribution Plant and Feeder Plant. The two segments are connected by a feeder-distribution interface, called a Serving Area Interface or SAI. Distribution plant is configured in Distribution Areas.

### 4. Outside Plant Structure

Outside plant structure refers to the set of facilities that support, house, guide, or otherwise protect distribution and feeder cable. There are three types of structure: aerial, buried, and underground.

a) Aerial Structure

Aerial structure typically consists of poles.[23] Pole investment is a function of the material and labor costs of placing a pole. A user-adjustable input allows the customization of the labor component of pole investment to local conditions. The Hatfield Model computes the total investment in aerial distribution and feeder structure within a CBG by evaluating relevant parameters, including the distance between poles, the investment in the pole itself, the total cable sheath mileage, and the fraction of aerial structure along the route.

The model assumes forty-foot Class 4 poles. The spacing between poles for aerial cable is fixed within a given density range but may vary between density ranges. The number of poles on a given route is calculated as

1 + (route distance/pole spacing), rounded up.

[23] In the two highest density zones, most aerial structure is assumed to be intrabuilding riser cable and "block cable" attached to buildings.

b) Buried Structure

Buried structure consists of trenches and related protection against water and other intrusions. The additional cost for protective sheathing and waterproof filling of buried cable is a fixed amount per foot in the case of fiber cable and is a multiplier of cable cost in the case of copper cable.[24] The total investment in buried structure is a function of total route mileage, the fraction of buried structure, investment in protective sheathing and filling and the density-range-specific cost of trenching.

c) Underground Structure

Underground structure consists of conduit and, for feeder plant, manholes and pullboxes. Manholes are used in conjunction with copper cable routes; pullboxes are used with routes that are exclusively served by fiber cable. The total investment in a manhole varies by density zone and includes materials, frame and cover, excavation, backfill, and site delivery. Investment in fiber pullboxes is a function of materials and labor. Underground cables are housed in conduit facilities that extend between manholes or pullboxes. The total investment in underground structure is a function of total route mileage, the fraction of underground structure, investment in conduit manholes, and pullboxes, and the cost of trenching needed to hold the conduit.

In each line density range, there may be a mixture of aerial, buried, and underground structure. For example, in downtown urban areas, it is frequently necessary to install cable in underground conduit systems, while rural areas may consist almost exclusively of aerial or direct-buried plant. Suburban areas may have a more even mixture of all three structure types.

Users can adjust the mix of aerial, underground and buried cable assumed within the model. These settings may be specified by density zone for fiber feeder, copper feeder, and copper distribution cables. Appendix B includes detailed lists of the Hatfield Model structure default values for aerial, buried and underground plant.

### 5. Terrain and Placement

The Hatfield Model incorporates the effects of geological factors on required structure investment. Terrain factors considered by the model include bedrock depth, rock hardness, and surface soil type.

[24] The default values for sheathing are $0.20 per foot for fiber and a multiplier of 1.04 for copper. The different treatment reflects the fact that the outside diameter of fiber cable is essentially constant for different strand numbers, and copper cable diameter increases with the number of pairs it contains.

If the rock depth in a CBG is less than a user-definable rock depth threshold, a rocky placement multiplier increases structure investment in poles, conduit placement, and trenching,[25] because it is more difficult to bury cable in rock than in soil. If bedrock does not exist within the placement depth, then the surface soil texture is examined to determine if soil can be plowed, or if more expensive placement techniques must be used. The model causes the rock placement multiplier to vary with rock depth; the entire multiplier applies if the rock depth is zero, and the value tapers linearly to zero at the user-defined placement depth.

Certain kinds of surface textures may increase the cost of structure. When these are encountered, the model extracts a multiplier from a lookup table in the distribution module inputs worksheet and applies it to the structure investment determined by the CBG's density zone. If both difficult soil conditions and rocky conditions are encountered, the model will multiply the structure investment by the sum of the rock placement and surface texture multipliers minus one.

Labor costs for placement may be adjusted for regional variation by the application of a user-entered labor adjustment factor.

### 6. Structure Sharing

Outside plant structures are generally shared by LECs, CATV operators, electric utilities, and others including competitive access providers (CAPs) and IXCs. To the extent that several utilities may place cables in common trenches, or on common poles, it is appropriate to share the costs of these structure items among these users. The Hatfield model assumes sharing of structure costs among the various utilities that occupy the structure. Although assumptions concerning the degree of sharing are user-adjustable; the default values used in the Hatfield Model reflect best forward-looking, economic practices for the various utilities involved.

### 7. Line Density Considerations

A number of parameters, such as the fill factors for distribution and feeder copper cable and the mixture of underground, buried, and aerial plant, are

[25] The Hatfield Model default maximum values for geological factors are as follows: rock depth threshold causing increased trenching cost, 24 inches; hard rock placement multiplier, 3.5; and soft rock placement multiplier, 2.0.

dependent on line density of the CBG. The line density of a CBG is defined as the total number of subscriber access lines per square mile of geographic area of the CBG. In HM 4.0, line density is broken down into nine different density ranges:

| Density Ranges (lines/sq. mile) |
|---|
| 0-5 |
| 5-100 |
| 100-200 |
| 200-650 |
| 650-850 |
| 850-2,550 |
| 2,550-5,000 |
| 5,000-10,000 |
| 10,000+ |

## C. DISTRIBUTION MODULE

### 1. Overview

The basic distribution architecture employed by the Hatfield Model is the grid topology shown in each unshaded portion of Figure 8 below. In this topology, backbone distribution cables extend vertically to within one lot depth of the top and bottom quadrant boundary. Branches spaced two lot depths apart traverse the quadrant horizontally to within one lot width of the left and right quadrant boundaries, forming a "tree and branch" topology.

This architecture is applied to the CBG based on the demographics of population location within the CBG. This demographic treatment was discussed in Section IV.B above.

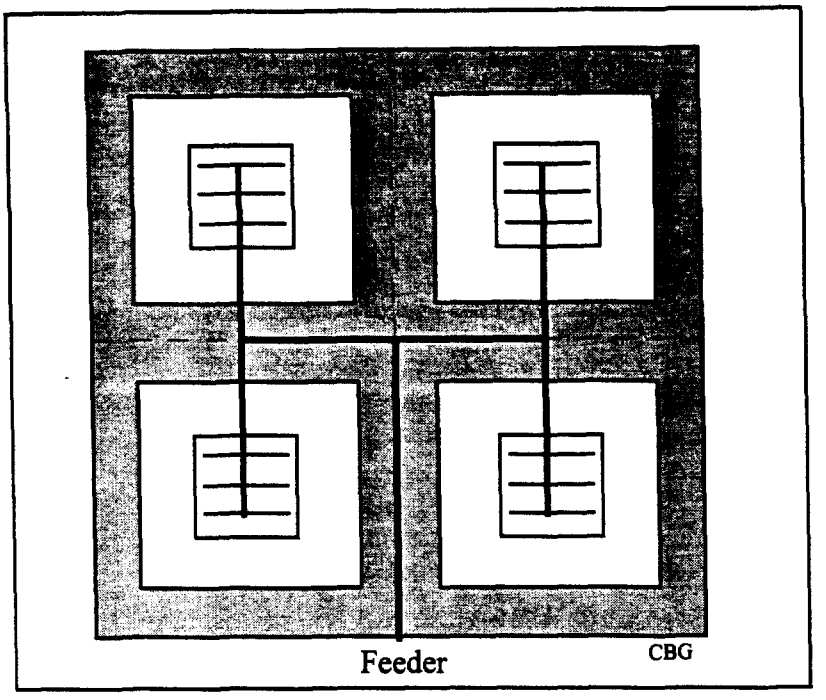


**Figure 8 Distribution Architecture**

CBGs with total areas less than 0.03 square miles and line densities greater than 30,000 lines per square mile are identified as high-rise CBGs and accorded special treatment appropriate for such a high rise. For CBGs other than those that have been treated as high-rise or for which demographic data show low density or a high portion of unoccupied territory in the CBG, the plot size per customer location is calculated from the number of customer locations (with an adjustment for multi-dwelling units) in the non-empty area of the CBG, with a lower limit of 0.2 acres. If the calculated plot size is less than a user-adjustable threshold, whose default value is three acres, distribution grid calculations are applied in the entire occupied area of each quadrant. If the calculated plot size exceeds the threshold, then a cluster is formed in the center of each quadrant. The size of the cluster is calculated assuming plot sizes equal to the threshold value. Distribution grid calculations are applied to the resulting clusters.

Three further details are important in understanding these steps. First, the high-rise test identifies cases in which the CBG size is very small, but its line density is so high as to be incompatible with any explanation other than vertical "stacking" of the customer locations. In such cases, the model assumes the distribution cable required to serve the CBG consists of riser cable inside the high rise buildings, and that the SAI required for service is located in the basements of the buildings. The number of floors in the high rise buildings is estimated by dividing the occupied building space by the area of the CBG reduced to account

for streets and sidewalks.[26] The occupied building space in square feet is calculated as follows:

occupied space = 1,500 * # households + 200 * # employees

Second, an effective lot frontage for the user-adjustable 15% of locations that are not clustered in the center of the occupied area in density zones 1-3 or density zones with more than 50 percent unoccupied territory in density zones 4-9 must be calculated. This effective lot frontage is calculated by a) subtracting the cluster area from the occupied area to obtain a remaining area; b) dividing the remaining area by the number of locations not in the cluster to obtain an effective area per non-cluster customer; and c) taking the square root of the result to estimate the effective frontage. The frontage calculated in this fashion does not necessarily correspond to the actual plot frontage of each customer location, but to the separation between customer locations.

Third, for "regular" CBGs, the model computes the plot size per customer location by dividing the effective area of the CBG (total CBG area less empty space) by the number of customer locations, as stated above. The model assumes that each customer plot is twice as deep as its frontage.

However, a refinement to this calculation is required to account for the fact that many households occupy dwelling units that cannot be characterized as single family detached homes. Likewise, structures occupied by business establishments may range from small single-tenant stores on small lots to large, multi-floor buildings (high-rise buildings are treated separately). Two methodologies were adopted to represent more realistically the actual situations that may occur.

The census database supplied by PNR identifies the number of households located in various types of buildings. The Hatfield Model assumes that the space occupied by residences other than single-family detached units is half that of detached homes and accordingly reduces the number of customer locations in calculating the effective plot size of detached homes. This reduction represents more adequately the space (including the actual living quarters, shared facilities, parking lots, and other area around buildings) that households in multi-dwelling units occupy relative to a detached single-family home. The reduction in effective customer locations is made before calculating the lot size in the manner described above. The intent is for the model to calculate the effective lot size that detached homes would have in the CBG, and lay out the distribution grid accordingly. The model assumes the grid continues throughout the areas where multi-tenant units are located; thus, there is no additional efficiency associated with serving such

[26] The reduction in CBG area, expressed as a fraction; is user-adjustable with a default value of 0.2.

premises.

The assumed reduction in effective households is conservative -- the model assumes multi-tenant units represent one-half of a regular-sized lot. Thus, the model is still likely to underestimate the effective lot size of detached homes because it is counting too high a number of equivalent customer locations. To limit this bias, the model places a lower limit on the minimum detached-home lot size of 1/5 acre.

Businesses are treated in a similar fashion, except that a check is made to ensure that the total of business locations occupy at least enough area to account for 200 sq ft per employee (the PNR database estimates both the number of businesses and number of employees in each CBG).

## 2. Distribution Architecture

As already stated, the basic distribution architecture in each CBG consists of grids serving population clusters, which, depending on the results of the steps described above, may either consist of a single high rise building, the entire occupied areas of the CBG, or a further grouping of customers within those areas. For low density or sparsely-populated CBGs, the grids are augmented by distribution cable along roads outside the clustered areas.

Feeder cable extends from the wire center into each CBG. From there, as Figure 6 shows, either copper or fiber connecting cables extend to the individual occupied areas of the CBG -- the "window panes." The connecting cables are in turn connected to the backbone cable of the distribution grid serving the occupied areas or population clusters. If the connecting cables are fiber, then the connection with the backbone cables occurs in an SAI next to the RT that terminates the fiber connecting cables; if the connecting cables are copper, the connection is just a splice point. For low density or sparsely-populated CBGs, road cables extend from the center of the clusters to the edge of the clusters, then along roads outside the clusters.

The cluster distribution grids and road cables consist in all cases of copper pairs. The road cables are provided with long loop treatment as necessary, as discussed subsequently. The decision as to whether the main feeder, sub-feeder, and connecting cables are copper or fiber takes place in a series of successive steps as follows:

1. Initially, the feeder and sub-feeder are considered to consist of copper or fiber cable, depending on whether the total route distance from the wire center to the center of the CBG is below or above the user-input Copper Feeder Max

Distance value, whose default is 9,000 ft.

2. Second, if the longest distribution cable extending from the center of the CBG to the furthest corner of an occupied area, is greater than a user-input threshold distance called the Local RT (per cluster) Thresholds - Maximum Total Distance, whose default value is 18,000 ft., the model assumes the connecting cable is fiber, and extends it to a DLC remote terminal and SAI located at the center of each occupied area. In this case, the model also assumes the feeder and sub-feeder consist of fiber cable, even if Step 1 initially assigns them as copper cable. If the longest distribution length does *not* exceed the threshold, then the connecting cables will be copper, while Step 1 will determine the feeder and sub-feeder cable type.
3. Third, if the sum of the lengths of the longest distribution cable, feeder cable, and sub-feeder cable exceeds the Local RT (per cluster) Thresholds - Maximum Total Distance, the model assumes the feeder, sub-feeder, and connecting cables all consist of fiber cable, even if the longest distribution cable length alone does not exceed this threshold.
4. If the road cable length alone, or the sum of feeder and subfeeder lengths plus the distance from the center of the CBG to the center of the population cluster plus the road cable length, exceeds the Local RT (per cluster) Thresholds - Maximum Total Distance, then the feeder, sub-feeder, and connecting cables are all assumed to consist of fiber cable even if the previous steps had otherwise treated them as consisting of copper cables in whole or in part.

The purpose of these steps is to ensure that fiber is extended far enough so that no copper cable length, as measured from the wire center to the furthest customer, exceeds the Local RT (per cluster) Thresholds - Maximum Total Distance.[27] This may lead to different combinations of feeder, subfeeder, and connecting cables, including all-copper-cable, fiber feeder and subfeeder with copper connecting cables, or all-fiber-cable configurations. Consistent with existing ARMIS classifications, all cable on the wire center side of the DLC remote terminal is classified as feeder cable, irrespective of where the remote terminal is located; all cable beyond the DLC remote terminal is classified as distribution cable.

The model restricts "long loop" treatment to subscribers served by "road" cables extending from the SAI located in the middle of the population clusters.[28]

[27] The only exception to this copper length limitation occurs for digitally-driven T1 road cables. See the discussion, below.

[28] If the user has specified consistently the percent of lines clustered in towns and the maximum size of lots in towns, no loops outside of those on road cables should exceed 18,000 feet on copper. Should the user have selected a specification that causes these cluster loops to exceed 18,000 feet on copper, either the town factor, the town lot size, or both should be reduced to ensure that these customer locations are served by road cables that receive appropriate T1 transmission treatment.

Whenever these cable lengths exceed 18,000 ft, the model locates small "subsidiary remote terminals" along the road cable to restrict the analog transmission distance over copper pairs to 18,000 ft. The road cables contain copper pairs and support T1 signals used to provide digital connections between the DLC remote terminals located in the centers of the subclusters and the subsidiary remote terminals. The model assumes conventional T1 transmission with 6,000 ft repeater spacing.

A road cable, depending on its length, may require several remote terminals. If, for example, the cable is 24,000 ft long, the model will serve the subscribers located along the first 18,000 ft of cable directly from the quadrant's SAI and will place a small remote terminal at 18,000 ft to serve the remaining subscribers. If the cable length is, say, 42,000 ft, the model will again serve those subscribers along the first 18,000 ft directly and locate a small remote terminal at 36,000 feet. This remote terminal then serves the subscribers lying between 18,000 ft and 42,000 feet over copper pairs in the road cable; the remote terminal serves those subscribers lying between 18,000 and 36,000 ft by "back-feeding" over pairs in the same cable containing the T1 pairs. In all cases, the model equips sufficient repeaters at 6,000 ft intervals beginning at a point 3,000 ft from the remote terminal located in the center of the subcluster from which the road cables emanate. The total investment includes T1 interfaces in the subcluster's remote terminal.

At a point close to a customer's location on the grid, a splice and block terminal are installed to connect one or more wire pairs from the distribution cable to an aerial or buried drop to the NID located on the wall of the premises.

### 3. Calculation of Distribution Investments

The model uses the CBG data, including size, empty area, number of lines, and line density, and applies the foregoing demographic and architectural considerations to determine the total distribution distances involved. It then estimates the investment in distribution cable, supporting structures, terminals and splices, drops, NIDs, and SAIs.

In calculating the investments, the model requires a number of data elements, which are provided to it through adjustable user inputs. These include cable fill factors, the amount of structure sharing with other utilities, the relative mix of aerial, buried, and underground facilities, the unit material and installation costs of the various network components, the demographic factors identified in subsection 2 above, such as the assumed plot size in clusters, and factors relating difficult terrain characteristics to increases in installation costs.

Appendix B defines each user input and the default value(s) for that input as set by the model developers. The set of inputs pertinent to the distribution calculations are inputs B1 through B36, and B163 (structure sharing) in Appendix B.

Two sets of the input parameters bear special attention. The first is the set of cable fill factors appearing as item B18 in Appendix B. Fill factors are intended to provide reserve capacity above and beyond the lines requirement determined by the model. If, for instance, a given cable segment must serve 75 lines and the fill factor set by the model is 0.50, then the target cable size determined by the model is 75/0.5, or 150. However, cables are available only in discrete sizes, as shown in Item B9. The model selects the cable size at or most closely above the minimum size calculated as above. In this example, this corresponds to a 200 pair cable. Thus, the achieved fill is 75/200, or 0.375. Generally, the average achieved distribution fill is significantly less than the target fills shown in Item B18.

Second, as discussed earlier, the Hatfield Model assumes that forward-looking practices of efficient telephone companies and other utilities will involve substantial structure sharing. The default levels of structure sharing assumed in HM 4.0, stated as the percentage of total structure costs assigned to the telephone company, are shown in Item B163 of Appendix B. In HM 4.0, the amount of structure sharing depends both on the type of structure -- poles and trenching -- and the density zone. HM 4.0 assumes, conservatively, that there is no sharing of conduit in underground installations.

### 4. Calculation of SAI and DLC Investments

The SAI in each CBG serves as an interface between the feeder and distribution facilities. Each SAI consists of a cabinet, including suitable physical mounting, and a simple passive cross connect. In the case of fiber feeder there is an adjacent DLC remote terminal. SAI investment is determined by the number of distribution and feeder pairs required to be served. The model equips multiple SAIs if the pair requirement exceeds the maximum SAI capacity.

Urban areas normally have feeder cable running directly into the basement of large buildings, rather than interfacing at an SAI outside of the building. In such cases, the SAI, located in the building, is significantly less expensive than the outdoor SAI. This type of interface consists of a plywood backboard and inexpensive "punch-down blocks," rather than the heavy steel weatherproof outside terminals found in less urban areas. HM 4.0 thus differentiates between outdoor and indoor SAIs, the former being the normal case, and the latter being used when a CBG is identified as a high-rise building.

The Distribution Module sizes and calculates the investment in the SAIs required in each CBG based on the number of distribution and feeder pairs required and the urban/non-urban characteristic of the CBG. The pertinent input parameter for the SAI is identified as B34 in Appendix B. It is the installed investment in an SAI, stated as a function of the number of distribution and feeder pairs served by the SAI. The model equips each CBG, or individual quadrants within a CBG if DLC remote terminals are extended to the quadrants, with one or more SAIs. The number required is determined by comparing the total line demand to 7,200, which is the maximum number of pairs that can be supported by a single SAI.

A given CBG is served by either fiber feeder or copper feeder, as discussed previously. When fiber feeder is used, one of two types of DLC equipment is selected. The first is designated "TR-303 DLC."[29] The second is designated "Low Density" DLC (which is also TR-303 compliant). The choice between these two types is determined on a CBG by CBG or quadrant by quadrant basis. If the number of lines is below a threshold value, "low density" DLC is used; above that threshold, TR-303 DLC is assumed. The threshold is user-adjustable, with a default value of 384 lines.

The investment in DLC equipment, when it is used, is calculated in the Distribution Module. The parameters involved in this calculation are identified as Items B49 through B60 in Appendix B. For either type of DLC system, low density or TR-303, the investment is calculated based on user-adjustable amounts for site and powering (B49), for common equipment (B52 for an initial number of lines, B59 for each additional increment of lines, and B60 for the maximum number of increments), and channel units (B53 for the cost of a channel unit, B54 for the number of regular and payphone lines each channel unit can support). Other parameters in the range identified above specify items such as the number of fibers per RT, etc.

### 5. Calculation of drop investment

HM 4.0 computes a weighted average drop investment in each density zone on both a per-drop and per-pair basis. The model uses the detailed household type and business line information contained in the CBG database to compute the total drop investment in each CBG. The total drop investment is applied to the sum of all households in single family attached and detached dwellings, mobile homes

[29] TR-303 (now GR-303; the term "TR-303" refers to earlier documents but is commonly used in the industry) is a Bellcore requirements document dealing with interfacing a DLC system with an end office switch.

and "other" dwelling types, all two- and four-household dwellings, and all single-line businesses. The per-pair drop investment applies to the remaining business lines, the adjusted private line total, and public lines, as well as to all households in multiunit buildings containing five or more households.

## C. FEEDER MODULE

### 1. Overview

The Distribution Module produces as inputs to the Feeder Module the main feeder, sub-feeder, and fiber connecting cable distances for each CBG. The Feeder Module uses these inputs to calculate the investment in feeder plant.

As seen in Figure 1, feeder cable begins at the wire center and ends at the SAI located within the CBG. Figure 6 displays the basic feeder architecture assumed in the model. Note that actual CBGs are contiguous; they are shown separated in Figure 6 only to simplify the drawing.

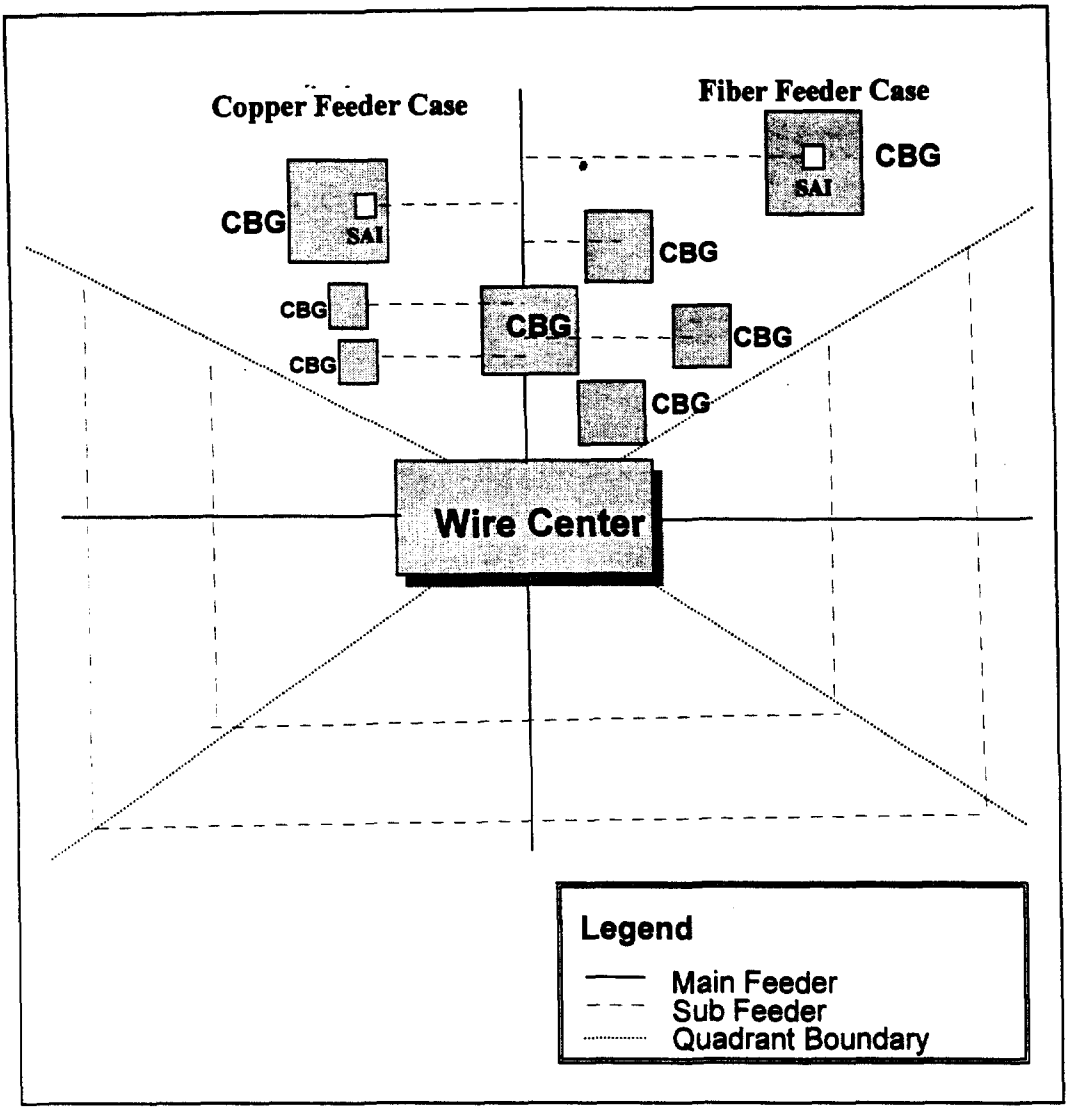


**Figure 6 Feeder Architecture**

As many as four main feeder routes may terminate at each wire center. Each feeder route serves one quadrant of the wire center's service area, and quadrant boundaries form angles of ±45° with the main feeder routes.[30] Each CBG is served by the main feeder route associated with the quadrant containing the centroid of the CBG. To reach each CBG, a sub-feeder branches from the main feeder at right angles and extends to an SAI within the CBG.

The main feeder cable sizes for both fiber and copper facilities are a

[30] Because HM 4.0 uses V&H coordinates to locate CBGs and wire centers, feeder routes are assumed to emanate from the wire center along the V&H axes. These axes are rotated slightly clockwise relative to latitude and longitude axes.

function of the total number of lines served in each CBG and the feeder fill factor for those CBGs. Feeder cable sizes range from 100 to 4200 pair cable for copper, and from 12 to 216 strands for fiber. Multiple cables are installed along feeder routes when the maximum size of a single cable is exceeded. Main feeder routes taper as they pass CBGs that are served either directly or via sub-feeder. Thus, the main feeder cable sizes generally decrease in increments as the distance from the wire center increases.

Both copper and fiber feeder cable may appear on a single main feeder route to serve different CBGs. If they do, they share most structure, including poles, manholes, and trenching. Copper and fiber cables do not, however, share conduit when they follow the same route.

## 2. Feeder Distance Calculations

### a) Calculating Main Feeder and Sub-Feeder Distances

As was shown in Figure 6, main feeder routes extend from the wire center in as many as four directions. Sub-feeder cables branch from the main feeder at right angles, giving rise to the familiar tree topology of feeder routes. The points at which sub-feeders branch off the main feeder delineate main feeder segments, which are the portions of main feeder cable between two branch points.[31]

The centers (centroids) of the CBGs may fall in any of the four feeder route quadrants. The PNR database assigns each CBG to a wire center based on the largest number of locations with telephone numbers in the CBG associated with the wire center. As shown in Figure 7, a set of parameters, including the quadrant, airline (radial) distance and angle (alpha), locates the CBG with respect to the serving wire center. With this information, the Hatfield Model applies straightforward trigonometric calculations to compute main feeder and sub-feeder distances.[32] The model computes sufficient subfeeder cable to connect the main feeder route to a point at the center of the CBG. Copper feeder cable always terminates at an SAI at the CBG center. If the model calls for fiber feeder, the subfeeder terminates at an RT at the CBG center (if RTs are not to be placed in the quadrant centers) or at the centers of each of the equipped quadrants (if the CBG is large enough to require local RTs).

[31] Splicing is required where the main feeder branches into sub-feeder. The cost of splicing, including material, equipment, and labor, is included with the cost of the cable assumed in the model.

[32] In rural areas where a feeder route may serve only one or two CBGs this rectilinear routing assumption is extremely conservative relative to the efficiencies that could be realized using more of a "beeline" feeder routing.

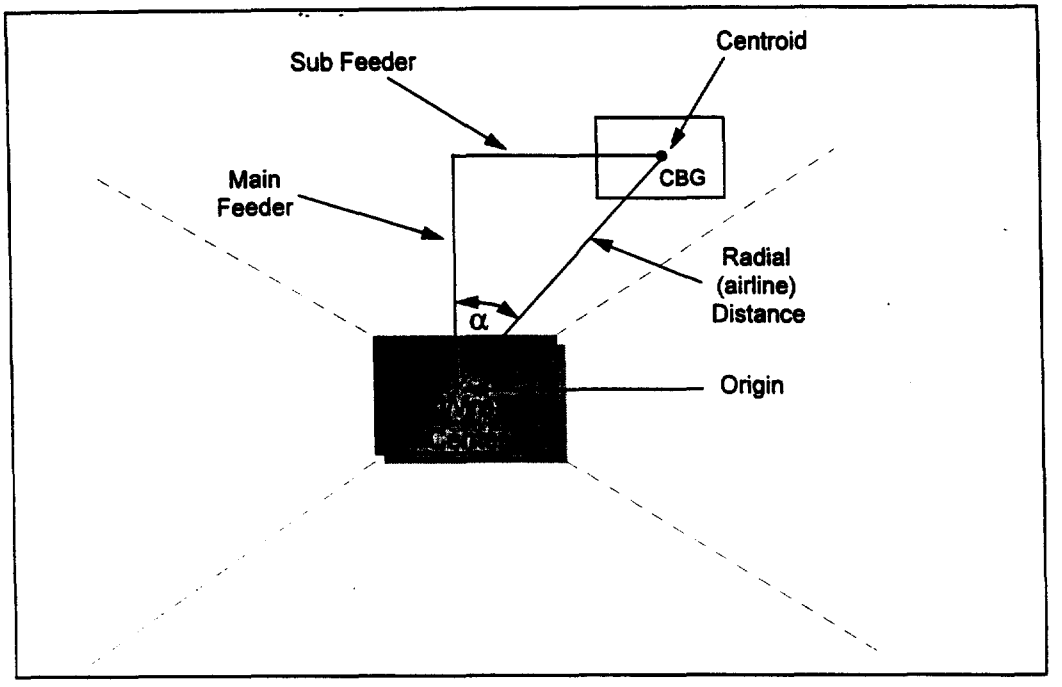


**Figure 7: Determination of CBG Location**

The total feeder and sub-feeder distance for a given CBG determines whether the CBG is served by copper cable or fiber.

Figure 8 demonstrates that multiple CBGs share capacity on certain segments of the main feeder route. Segments located closer to the wire center require more capacity than segments near the periphery. The Hatfield Model addresses this need by tapering the main feeder facilities as the distance from the wire center increases. Thus, it must determine the various "segment distances," shown as S-1, S-2, ..., in Figure 8, so it can size the cable in each segment. The segment distances along a main route are calculated in two steps. First, the CBGs are tabulated so they appear in the order of increasing distance along the main route. Segment distances are then calculated as the difference between the main feeder distances of adjacent CBGs.

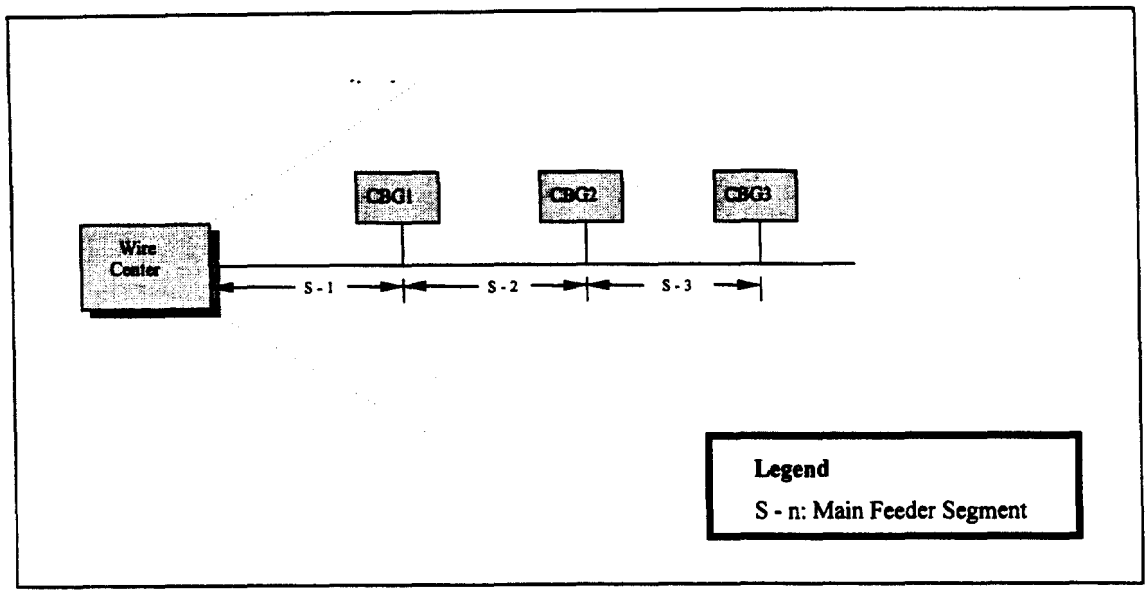


**Figure 8: Main Feeder Segmentation**

b) Copper and Fiber Sub-Feeder Cable Sizing

Sizing copper sub-feeder cable for individual CBGs is a function of two parameters: the total number of lines served within the CBG and the copper feeder fill factor. To select the appropriate cable size, the required line capacity is computed by dividing the total number of lines in the CBG by the fill factor. The model then chooses the smallest cable size that meets or exceeds this quotient. For instance, if the number of lines is 200 and the fill factor is 0.80, the next cable size larger than 200/0.80 is selected. Since 200/0.80 equals 250, the 400 pair cable is selected. As with distribution cable, this may lower substantially the average effective fill compared to the input value entered. Multiple cables are used in cases where the maximum cable size is surpassed.

The number of optical fibers needed to serve a given CBG is calculated by multiplying the number of DLC RTs in that CBG by the number of strands per RT. The strands per RT is a user-adjustable quantity, with a default value of four.[33] In the subfeeder serving the CBG, the model chooses the smallest optical fiber cable size that meets or exceeds the required number of strands, with a minimum cable size of twelve fiber strands. In the main feeder, the fiber cable on each segment is sized to meet the aggregate demand of CBGs beyond that segment, taking a user-adjustable fiber strand fill factor into account.

[33] Because a DLC terminal requires a minimum of two fibers, one for each direction of transmission, the Hatfield default of four fibers provides complete redundancy.

c) Main Feeder Segment Sizing

Each segment in the main feeder is sized to serve all the CBGs located past the segment. For example, in Figure 8, segment 1 is sized with adequate capacity to serve CBG1, CBG2, and CBG3. Segment 3 will be sized with less capacity than segment 1 since it serves only CBG3. Thus, the individual cable requirements for CBGs at and beyond the end of a particular main feeder segment are aggregated to determine the required cable size for that main feeder segment. When the maximum cable size is exceeded on a given segment, multiple cables are installed.

d) Structure Investment

The fraction of aerial, buried and underground plant may be set separately for all density ranges and for each feeder cable type, copper or optical fiber. Based on these fractions, the distances involved, and the cost of various structure components, the Feeder Module calculates the investment in feeder structure.

In addition to the sharing of structure between telephone companies and other utilities, there are two other forms of structure sharing relevant to feeder plant. First, with the exception of conduit, structure is shared between copper and fiber feeder cables along main feeder routes. Second, structure is shared between feeder and interoffice facilities. A detailed discussion of the latter type of sharing is presented in the interoffice section of this document.

e) Allocating Total Main Feeder Investment to Each CBG

All the feeder facility investments are computed on a per CBG basis. To do this, it is necessary to assign the appropriate amount of investment in each segment of the main feeder route to the individual CBGs that are served by that segment. The portion of a main feeder segment investment assigned to a CBG is computed using the ratio of lines in that CBG to total number of lines in all CBGs served by that main feeder segment. This is done separately for the copper and fiber feeder that may coexist on a given route.

f) Relevant Input Parameters

The set of user inputs and default values used in feeder calculations appear as inputs B37-B48 and B61-B62, as described in Appendix B. The Feeder Module also calculates terrain impacts using inputs B20-B23.

## D. SWITCHING AND INTEROFFICE MODULE

### 1. Overview

This Module produces network investment estimates in the following categories:

*Switching and wire center investment* -- This category includes investment in local and tandem switches, along with associated investments in wire center facilities, including buildings, land, power systems and distributing frames.

*Signaling network investment* -- This includes investment in STPs, SCPs and signaling links.

*Transport investment* -- This category consists of investment in transmission systems supporting local interoffice (common and direct) trunks, intraLATA toll trunks (common and direct) and access trunks (common and dedicated).

*Operator Systems investment* -- This includes investments in operator systems positions and operator tandems.

### 2. Description of inputs and assumptions

For the Switching and Interoffice Module to compute required switching and transmission investments, it requires as inputs total line counts for each wire center, distances between switches, and traffic peakedness assumptions, as well as inputs describing the distribution of total traffic among local intraoffice, local interoffice, intraLATA toll, interexchange access and operator services. This module takes as data inputs minutes and call attempts data from ARMIS and overall line counts obtained from the PNR database for the CBGs served by that wire center and interoffice distances for the calculation of transmission facilities investments.[34] It also requires many user-adjustable input assumptions. The set of user inputs and default values described in Appendix B and used in various phases of the module include

- B63-B74 for end office switching;
- B75-B80, for the wire center in which the end office switches and tandems are housed.

[34] HM 4.0 includes a set of interoffice distance calculations produced from wire center location information from Bellcore's Local Exchange Routing Guide (LERG).