Puerto Rico Telephone Company

CC Dcket 96-45
USF Data Request

Study Area: Puerto Rico Telephone - CENTRAL (PRCC)

ATTACHMENT 2

SWITCH SPECIFIC DATA
DIGITAL LINE CARRIER

Attachment 2

Company: Puerto Rico Telephone Company
Study Area: Puerto Rico Telephone Company - Central

	Question (12) Digital Switches			Question (13) Switch Contract Information				
	Switches purchased in 1995 & 1996							
Switch	Material Cost	Installed Cost	Lines Served	Switching Manufacturer	Contract is Proprietary	Price Includes Removal	Time Period for Contract	Number of lines to Install
CAYEY				SIEMENS	Y	N	4 YEARS +	11376
HONDURAS				SIEMENS	Y	N	4 YEARS +	1464
BEATRIZ				SIEMENS	Y	N	4 YEARS +	1280
VEGA				SIEMENS	Y	N	4 YEARS +	944
CAGUS				SIEMENS	Y	N	4 YEARS +	10000
SAN ANTONIO				SIEMENS	Y	N	4 YEARS +	959
CANAS				SIEMENS	Y	N	4 YEARS +	1575
NAVARRO				SIEMENS	Y	N	4 YEARS +	1248
BEATRIZ I				SIEMENS	Y	N	4 YEARS +	1008
BEATRIZ II				SIEMENS	Y	N	4 YEARS +	1173
CANABONCITO				SIEMENS	Y	N	4 YEARS +	2606
LA BARRA				SIEMENS	Y	N	4 YEARS +	1657
GURNPR				SIEMENS	Y	N	4 YEARS +	5312
JUNCOS				SIEMENS	Y	N	4 YEARS +	6420
AIBONITO				SIEMENS	Y	N	4 YEARS +	4603
LLANOS				SIEMENS	Y	N	4 YEARS +	859
ASOMANTE				SIEMENS	Y	N	4 YEARS +	638
RURAL PASTO				SIEMENS	Y	N	4 YEARS +	884
LA PLATA				SIEMENS	Y	N	4 YEARS +	427
SAN LORENZO				SIEMENS	Y	N	4 YEARS +	5956
VALENCIA ABAJO				SIEMENS	Y	N	4 YEARS +	628
CERRO GORDO				SIEMENS	Y	N	4 YEARS +	816
CAYAGUAS				SIEMENS	Y	N	4 YEARS +	316
ESPINO				SIEMENS	Y	N	4 YEARS +	608
MORENA				SIEMENS	Y	N	4 YEARS +	508
QUEBRADA HONDA				SIEMENS	Y	N	4 YEARS +	720
JAGUAL				SIEMENS	Y	N	4 YEARS +	832
QUEMADO L				SIEMENS	Y	N	4 YEARS +	704
QUEMADO M				SIEMENS	Y	N	4 YEARS +	460
CIDRA				SIEMENS	Y	N	4 YEARS +	5632
CIEBA A				SIEMENS	Y	N	4 YEARS +	903
BAYAMON B				SIEMENS	Y	N	4 YEARS +	1233

SWITCH SPECIFIC DATA **Attachment 2**
DIGITAL LINE CARRIER

Company: Puerto Rico Telephone Company
Study Area: Puerto Rico Telephone Company - Central

Question (14)
DLCs Purchased in 1995 &1996

	Material Cost		Installed Cost		No. Lines
DLC	Common Equip.	Per-line Equip.	Common Equip.	Per-line Equip.	Served 1st yr. y.e.
NA	NA	NA	NA	NA	NA
NA	NA	NA	NA	NA	NA
NA	NA	NA	NA	NA	NA
NA	NA	NA	NA	NA	NA
NA	NA	NA	NA	NA	NA
NA	NA	NA	NA	NA	NA
NA	NA	NA	NA	NA	NA
NA	NA	NA	NA	NA	NA
NA	NA	NA	NA	NA	NA
NA	NA	NA	NA	NA	NA
NA	NA	NA	NA	NA	NA
NA	NA	NA	NA	NA	NA
NA	NA	NA	NA	NA	NA
NA	NA	NA	NA	NA	NA
NA	NA	NA	NA	NA	NA
NA	NA	NA	NA	NA	NA
NA	NA	NA	NA	NA	NA
NA	NA	NA	NA	NA	NA
NA	NA	NA	NA	NA	NA
NA	NA	NA	NA	NA	NA
NA	NA	NA	NA	NA	NA
NA	NA	NA	NA	NA	NA
NA	NA	NA	NA	NA	NA
NA	NA	NA	NA	NA	NA
NA	NA	NA	NA	NA	NA
NA	NA	NA	NA	NA	NA
NA	NA	NA	NA	NA	NA
NA	NA	NA	NA	NA	NA
NA	NA	NA	NA	NA	NA
NA	NA	NA	NA	NA	NA
NA	NA	NA	NA	NA	NA
NA	NA	NA	NA	NA	NA
NA	NA	NA	NA	NA	NA
NA	NA	NA	NA	NA	NA
NA	NA	NA	NA	NA	NA
NA	NA	NA	NA	NA	NA
NA	NA	NA	NA	NA	NA
NA	NA	NA	NA	NA	NA
NA	NA	NA	NA	NA	NA
NA	NA	NA	NA	NA	NA
NA	NA	NA	NA	NA	NA

Question (21)
DLC Contracts

DLC	DLC Manufacturer	Contract is Proprietary	Time Period For contract
	DSC	Y	1 year
	AT&T	Y	NA

NA	NA	NA	NA	NA	NA								
NA	NA	NA	NA	NA	NA								
NA	NA	NA	NA	NA	NA								
NA	NA	NA	NA	NA	NA								
NA	NA	NA	NA	NA	NA								
NA	NA	NA	NA	NA	NA								
NA	NA	NA	NA	NA	NA								
NA	NA	NA	NA	NA	NA								
													x

Puerto Rico Telephone Company

CC Docket 96-45
In the Matter of Federal-State Joint Board on Universal Service
Order
Released : July 9, 1997

USF Data Request

Response to Question Number [2] Loop Length Study

Attachment 2

Puerto Rico Telephone Company
Loop Length Studies
Summary

#	(A) 4/28/97 11 Exchange Study	(B) 4/17/97 Metro Only Study	Total
1	16,510 ft	4,612 ft	
2	5,378 ft	17,880 ft	
3	4,001 ft	8,120 ft	
4	3,988 ft	14,150 ft	
5	3,550 ft	2,380 ft	
6	8,950 ft	4,070 ft	
7	7,500 ft	12,200 ft	
8	5,800 ft	6,587 ft	
9	5,260 ft	11,177 ft	
10	2,380 ft	4,597 ft	
11	13,937 ft	4,068 ft	
12	14,816 ft	15,164 ft	
13	11,415 ft	4,109 ft	
14	383 ft	4,736 ft	
15	9,469 ft	18,905 ft	
16	6,700 ft	8,100 ft	
17	6,781 ft	17,150 ft	
18	6,976 ft	3,500 ft	
19	10,533 ft	4,001 ft	
20	10,533 ft	5100 ft	
21	17,711 ft	4,850 ft	
22	4,736 ft	8,378 ft	
23	18,305 ft	-----	
24	14,500 ft	-----	
25	3,639 ft	-----	
26	9,229 ft	-----	
27	4,463 ft	-----	
28	4,966 ft	-----	
Simple Average	8,300 ft	8,356 ft	8,325 ft

Number of Loops from study	(A)	(B)	Total
0-5,000ft	9	10	19
5,001-10,000 ft	10	5	15
10,001 + ft	9	7	16

PRTC Loop Length Study

11 Exchange

Study (A)

Total Loops Sampled : 28

Towns

Town	Line	Address	AddAddress	ServiceType	SLC
Adjuntas	8292129	19 San Joaquin St		B	☐
Aricibo	8793868	X-23 29 St.	Urb. Vista Azul	R	☐
Carolina	7576650	AB-19 Monserrate St	Valle Arriba Height	B	☐
Cieba	8853894	I-6 Calle 8	Jardines de Cieba	R	☐
Guaynabo	2722982	Calle Sauila X-26	Urb. Santa Clara	R	☐
	7202436	Centro Comercial	Ave. Apollo	X	☐
	7202682	SR #836 Km 3.4	Bo. Santa Rosa II	R	☐
	7316396	SR #20 R-836 Km 2.3	Bo. Camarones	R	☑
	7896944	Calle Brisaida N3	Urb. Munoz Rivera	R	☐
	7898839	Calle Sonata #19	Urb. Munoz Rivera	R	☐
	7904217	Calle Safiro #17	Urb. Munon Rivera	R	☐
Humacao	8508275	Parcela 425	Comunidad Anton R	R	☐
ajas	8994673	La Parguera #27		R	☐
as Caisras Ward	8337441	PR#2 Km 151.7		R	☐
once	8406075	Intermediate School Aupnur	Const A-30	B	☐
	8406259	H-24 St 8	Urb. Los Caobos	R	☐
	8428628	D-49 Calle 4 Nuevo Mameyes		R	☑
	8429223	Apt 1504 Edif. Coop de la Viv	Coop de la Vivienda	R	☐
	8438832	12 Calle A Urb Starlight		R	☐
	8439142	St 33 Juidires del Caube #OO		R	☐
	8441200	PR#2 KM 256.2		X	☐
	8481571	F69B Urb. El Monte		R	☐
	8482879	F-33 Parque Los Almendros		R	☐
nturce	7238366	Hipodromo St	Plaza 20 Condo	B	☐
ga Baja	8550691	97 Begonia St	Bo. Ojo de Agua	R	☐
	8556705	123 San Bruno St	Urb. San Augustin	R	☐
	8583888	PR 686 Km 13.3		B	☐
	8584312	D-54 Urb. Montecarlo		R	☐

loopID Query 4/28/97

Line	Address	AddAddress	Town	Serv	Loc	Bull	CO	Switch	EngrLastNa	EngrFirst	SLC
2722982	Calle Sauila X-26	Urb. Santa Clara	Guaynabo	R	U	S	Guan	Selmen	Grafals	Edwin	☐
7202436	Centro Comercial	Ave. Apollo	Guaynabo	X	C	S	Guan	Siemen	Grafals	Edwin	☐
7202682	SR #836 Km 3.4	Bo. Santa Rosa II	Guaynabo	R	R	S	Gua	RSI	Grafels	Edwin	☐
7238366	Hipodromo St	Plaza 20 Condo	Santurce	B	U	O	SanW	DMS	Rivera	Carlos	☐
7316396	SR #20 R-836 Km 2.3	Bo. Camarones	Guaynabo	R	R	S	Guan	Selmen	Grafals	Edwin	☑
7576650	AB-19 Monserrate St	Valle Arriba Heights	Carolina	B	U	S	Car	DMS100	Grafales	Edwin	☐
7896944	Calle Brisaida N3	Urb. Munoz Rivera	Guaynabo	R	U	S	Guay	Selmen	Grafals	Edwin	☐
7898839	Calle Sonata #19	Urb. Munoz Rivera	Guaynabo	R	U	S	Guan	Selmen	Grafals	Edwin	☐
7904217	Calle Safiro #17	Urb. Munon Rivera	Guaynabo	R	U	S	Guay	Siemen	Grafals	Edwin	☐
8292129	19 San Joaquin St		Adjuntas	B	U	O	Adj	DMS100	Rivera	Ricardo	☐
8337441	PR#2 Km 151.7		Las Caisras War	R	R	S	May	DMS100	Rodriguez	Jose	☐
8406075	Intermediate School Au	Const A-30	Ponce	B	U	O	Ponc	DMS	Rivera	Ricardo	☐
8406259	H-24 St 8	Urb. Los Caobos	Ponce	R	U	S	Ponc	DMS	Rivera	Ricardo	☐
8428628	D-49 Calle 4 Nuevo Ma		Ponce	R	U	S	Ponc	DMS-1			☑
8429223	Apt 1504 Edif. Coop de	Coop de la Vivienda	Ponce	R	R	M	Ponc	DMS	Rivera	Ricardo	☐
8438832	12 Calle A Urb Starlight		Ponce	R	U	S	Pon	DMS100	Rivera	Ricardo	☐
8439142	St 33 Juidires del Canb		Ponce	R	U	S	Ponc	DMS	Rivera	Ricardo	☐
8441200	PR#2 KM 256.2		Ponce	X	C	H	ElTq	RSU	Rivera	Ricardo	☐
8481571	F69B Urb. El Monte		Ponce	R	U	S	CtLa	RSU			☐
8482879	F-33 Parque Los Almen		Ponce	R	U	S	Ponc	DMS	Rivera	Ricardo	☐
8508275	Parcela 425	Comunidad Anton R	Humacao	R	U	S	Hum	DMS100	Toledo	Carlos	☐
8550691	97 Begonia St	Bo. Ojo de Agua	Vega Baja	R	R	S	VeBj		Rivera	Carlos	☐
8556705	123 San Bruno St	Urb. San Augustin	Vega Baja	R	U	S	VeBj		Rivera	Carlos	☐
8583888	PR 686 Km 13.3		Vega Baja	B	R	S	VeBj		Rivera	Carlos	☐
8584312	D-54 Urb. Montecarlo		Vega Baja	R	U	S	VeBj		Rivera	Carlos	☐
8793868	X-23 29 St.	Urb. Vista Azul	Aricibo	R	U	S	Are	DMS100	Rivera	Carlos	☐
8853894	I-6 Calle 8	Jardines de Cieba	Cieba	R	U	S	Cie	DMS100	Toledo	Carlos	☐
8994673	La Parguera #27		Lajas	R	U	S	LaPa	DMS100	Rodriguez	Jose	☐

section

Line	Sections	Gauge1	Length1	Place1	Size1	Type1	Gauge2	Length2	Place2	Size2	Type2	Gauge3	Length3	Place3	Size3	Type3	TotLength	CSA
2722982	1	24	16510	U	2400												16510	NO
7202436	2	26	4728	U	2100		24	650									5378	YES
7202682	1	24	4001	B	1200												4001	YES
7238366	1	26	3988	U	15	STP											3988	YES
7316396	1	24	3550	B	1200												3550	YES
7576650	2	26	6300	U	2100	JF	24	2650	U	1500	JF						8950	YES
7896944	1	24	7500	U	2100												7500	YES
7898839	1	24	5800	U	2100												5800	YES
7904217	1	24	5260	U	2100												5260	YES
8292129	1	26	2380	U	1500	STP											2380	YES
8337441	2	26	1774	A	2700	STP	24	12163	A	2400	STP						13937	NO
8406075	2	26	8712	U	3000	STP	24	6104	U	2400	STP						14816	NO
8406259	3	26	5120	U	3000	STP	24	3120	U	2400	STP	26	3175	U	2400	STP	11415	NO
8428628	1	24	383	A	300	JF											383	YES
8429223	2	26	700	U	1800	STP	24	8768	U	600	JF						9468	YES
8438832	2	26	5210	U	1800	JF	24	1490	U	900	JF						6700	YES
8439142	2	26	1600	U	3000		24	5181	U	1800							6781	YES
8441200	3	26	1350	U	900	STP	24	3966	A	900	JF	22	1660	A	100	JF	6976	NO
8441571	2	26	8030	A	900	JF	24	2503	a	1200	JF						10533	NO
8441573	2	26	8030	A	900	JF	24	2503	a	1200	JF						10533	NO
8508275	1	24	17711	U	1800	STP											17711	NO
8550691	2	24	3360	U	1200	STP	26	1376	U	300	ALP						4736	YES
8556705	2	26	6860	U	3000	STP	24	11445	A	1800	STP						18305	NO
8583888	1	24	14500	B	1500	JF											14500	NO
8584312	2	26	1633	U	3000	STP	24	2006	U	600	JF						3639	YES
8793868	2	26	2629	U	2100	AC	24	6600	U	2400	AC						9229	YES
8853894	2	26	3063	U	1500	STP	24	1400	A		ALP						4463	YES
8994673	1	24	4966	U	1200	JF											4966	YES

Mean	8608
Std Dev	4941
Confidence	1564

BridgeTaps

ine	T1gauge	T1length	T1loc	T2gau	T2length	T2loc	T3gau	T3length	T3loc	Taps	TotalBT
2722982	0	0	0	0	0	0	0	0	0	0	0
7202436	26	1300	4046	0	0	0	0	0	0	1	1300
7202682	0	0	0	0	0	0	0	0	0	0	0
7238366	26	762	3768	0	0	0	0	0	0	1	762
7316396	24	300	3500	24	1050	3500	0	0	0	1	1350
7576650	24	200	8020	0	0	0	0	0	0	1	200
7896944	0	0	0	0	0	0	0	0	0	0	0
7898839	0	0	0	0	0	0	0	0	0	0	0
7904217	0	0	0	0	0	0	0	0	0	0	0
8292129	26	500	2380	0	0	0	0	0	0	1	500
8337441	24	425	11362	24	0	13900	0	0	0	1	425
8406075	0	0	0	0	0	0	0	0	0	0	0
8406259	0	0	0	0	0	0	0	0	0	0	0
8428628	24	385	383	0	0	0	0	0	0	1	385
8429223	0	0	0	0	0	0	0	0	0	0	0
8438832	24	280	6700	0	0	0	0	0	0	1	280
8439142	24	0	6101	24	0	6781	0	0	0	1	0
8441200	0	0	0	0	0	0	0	0	0	0	0
8481571	0	0	0	0	0	0	0	0	0	0	0
8482379	0	0	0	0	0	0	0	0	0	0	0
8508275	0	0	0	0	0	0	0	0	0	0	0
8550691	0	0	0	0	0	0	0	0	0	0	0
8556705	0	0	0	0	0	0	0	0	0	0	0
8583888	24	0	14500	0	0	0	0	0	0	1	0
8584312	0	0	0	0	0	0	0	0	0	0	0
8793868	0	0	0	0	0	0	0	0	0	0	0
8853894	0	0	0	0	0	0	0	0	0	0	0
8994673	24	872	4930	0	0	0	0	0	0	1	872

Line	FeederID	Feederpair	Loading	Feederage	Housecable	Housepair	Houseterm	ID
2722982	GB-06	496	N	0	AC-45	663		0
7202436	GB08	508	N	0	IP35	366		0
7202682	GBA1	1106	N	0		0		0
7238366	C2	11	N	0		11		0
7316396	DLC	0		0	GBA1	606		0
7576650	C-8	148	N	0	IP-218	976		0
7896944	GB04	958	N	0	IP-80	504		0
7898839	GB-04	1598	N	0	IP-79	752		0
7904217	GB04	1378	N	0	IP79	54		0
8292129	AJ-02	1156	N	0		0		0
8337441	C-19	498	N	0		0		0
8406075	PC-11	877	N	0	IP-63	3	4343	0
8406259	PC-29	255	N	0	IP-39	876		0
8428628	PCKW	18	DLC	0	IP-6	230	19	0
8429223	PC-5	351	N	0		0	2395	0
8438832	PC-04	390	N	0	IP-48	219		0
8439142	PC-16	754	N	0	IP3119	809		0
8441200	PCQ-1	785	N	0		0		0
8481571	PCC-1	2139	N	0	IP-5	1463		0
8482879	PC-23	701	N	0		0	4649	0
8508275	C-11	1106	N	0	IP-35	655		0
8550691	CA5	1843	N	0	IP-40	490		0
8556705	CA3	668	N	0	IP-25	332		0
8583888	C-9	1176	N	0		0	664	0
8584312	CA5	2758	N	0	IP-46	5		0
8793868	C-8	12	N	0	IP-56	3		0
8853894	C-4	809	N	0	IP-15A	73		0
8994673	C-1	108	N	0	IP-11	212		0

e	Seg1Gauge	Seg1Length	Seg1Type	Seg1Size	Seg1Place	Seg2Gauge	Seg2Length	Seg2Type	Seg2Size
722982	24	5000		2400	U	24	4600		1500
202436	26	2000		2100	U	26	813		2100
202682	24	375		1200	B	24	1550		600
238366	26	300	STP	15	U	26	2510	STP	2700
316396	24	375		1200	B	24	1375		900
576650	26	6300	JF	2100	U	24	1200	JF	1500
896944	24	1900		2100	U	24	500		2100
898839	24	2400		2100	U	24	1900		900
904217	24	2400		2100	U	24	160		900
292129	26	2200	STP	1500	U	26	180	ALP	900
337441	26	1774	STP	2700	A	24	9070	STP	2400
106075	26	8712	STP	3000	U	24	3738	STP	2400
106259	26	5120	STP	3000	U	24	3120	STP	2400
128628	24	115	JF	300	A	24	268	JF	100
129223	26	700	STP	1800	U	24	391	JF	600
138832	26	4320	JF	1800	U	26	890	JF	900
139142	26	1600		3000	U	24	3200		1800
141200	26	1350	STP	900	U	24	2805	JF	900
41571	26	8030	JF	900	A	24	1330	JF	1200
41573	26	8030	JF	900	A	24	1330	JF	1200
08275	24	15031	STP	1800	U	24	1780	STP	1200
50691	24	2760	STP	1200	U	24	600	ALP	600
56705	26	6660	STP	3000	U	24	4780	STP	1800
83888	24	11130	JF	1500	B	24	3370	JF	1200
84312	26	624	STP	3000	U	26	1009	STP	1200
93868	26	764	AC	2100	U	26	400	AC	3600
53894	26	1325	STP	1500	U	26	708	STP	800
94673	24	165	JF	1200	U	24	455	JF	900

ace	Seg3Gauge	Seg3Length	Seg3Type	Seg3Size	Seg3Place	Seg41Gauge	Seg4Length	Seg4Type	Seg4Size
	24	550		1500	U	24	4600		900
	26	579		1500	U	26	654		1500
	24	976		50	B	24	1100		25
	26	958	STP	1500	U	26	50	STP	1200
	24	1750		75	B	24	50		12
	24	1100	JF	300	B	24	220	JF	200
	24	1900		1200	U	24	200		900
	24	300		900	B	24	450		600
	24	300		900	U	24	1000		400
	24	518	JF	1800	A	24	1200	JF	100
	24	1021	STP	900	U	24	355	JF	600
	26	500	STP	2400	U	26	2375	JF	1200
	24	2018	JF	600	A	24	1179	JF	600
	24	390	JF	900	U	24	1100	JF	200
	24	611	JF	1200	U	24	150	JF	600
	24	1161	JF	200	A	22	1660	JF	100
	24	375	JF	600	a	24	254	JF	100
	24	375	JF	600	a	24	254	JF	100
	24	500	STP	200	U	24	400	STP	200
	26	700	ALP	300	U	26	470	ALP	300
	24	3000	JF	1500	A	24	190	JF	300
	24	150	JF	600	U	24	200	JF	900
	26	1465	AC	3000	U	24	500	AC	2400
	26	1030	STP	200	U	24	1400	ALP	
	24	1473	JF	600	U	24	1673	JF	400

ace	Seg5Gauge	Seg5Length	Seg5Type	Seg5Size	Seg5Place	Seg6Gauge	Seg6Length	Seg6Type	Seg6Size
	24	300		1200	A	24	460		900
	26	682		900	U	24	650		900
	26	170	ALP	600	U				
	24	130	JF	25	B				
	24	1900		900	A	24	1100		600
	24	750		150	B				
	24	1200		300	A	24	200		150
	24	1375	JF	50	A				
	24	440	JF	600	B	24	550	JF	300
	26	300	JF	100	B				
	24	1052	JF	600	A	24	4128	JF	600
	24	540	JF	900	B	24	680	JF	100
	24	544	JF	50	A				
	24	544	JF	50	A				
	26	206	ALP	25	A				
	24	550	JF	300	A	24	2175	JF	300
	24	300	ALP	400	A	24	611	ALP	200
	24	5836		1500	A	24	264		900
	24	1200	JF	300	A				

6Place	Seg7Gauge	Seg7Length	Seg7Type	Seg7Size	Seg7Place	Seg8Gauge	Seg8Length	Seg8Type	Seg8Size
	24	640		1200	B	24	500		900
	24	600		50	A				
	24	400		100	A				
	24	500	JF	25	B				
	24	100	JF	600	A				
	24	600	JF	200	B	24	300	JF	100
	24	470	ALP	100	A	24	745	ALP	50
	26	2640	ALP		U				

Seg9Gauge	Seg9Length	Seg9Type	Seg9Size	Seg9Place
24	500		100	B
24	450	JF	50	B

PRTC Loop Length Study

4 Exchange Metro Only

Study (B)

Total Loops Sampled : 22

Sheet1

To: Jorge Diaz

List of random selected numbers for the PRTC Loop Survey
Fifteen numbers are provided for each Wire Center location
Please try to do all loops, but no less than 50 as agreed.
Provide Loop Layout data for each loop as was done for first 10 loops.
Please fax the data to me at 201-984-2218
Thanks, Larry Roscoe

GUAYNABO		SANTURCE East		PONCE		VEGA BAJA	
NNX	Line	NNX	Line	NNX	Line	NNX	Line
789	6944	726	2700	840	5171	858	2146
787	0749	726	1165	840	9986	858	0591
720	2436	726	2586	842	8701	858	9833
720	2681	727	9663	842	5303	858	4723
731	4839	727	5318	848	8540	858	2678
731	1905	727	9457	848	1571	858	6701
790	5815	728	6904	841	9775	858	7632
790	4216	728	2028	841	7749	855	8875
272	2982	728	8281	843	2363	855	7251
272	5620	268	0064	843	9142	855	0255
287	1644	268	4521	844	1509	855	7411
287	0365	268	7825	844	6290	855	1855
789	8838	728	3331	259	6666	855	7966
731	6396	727	6200	259	4321	855	0901
272	0242	728	6634	284	1713	855	1346

Loop Survey Questionnaire

Name of person completing this form: Carlos D. Toledo
Title: O.P. Planner Phone: 742-5020

Customer Line Number: 885-3894
Customer Service Address: I-6 Calle 8
Jardines de Ceiba, Ceiba PR

Characteristics of location: Urban: x Residential: x
Rural: ____ Farm: ____
Commercial: ____ Industrial: ____

Type of building: Single unit: x Multi-Unit: ____ High rise: ____
Store: ____ Offices: ____ Industrial: ____
Other (please explain): ____

Type of Service: Residential: x Business: ____
PBX: ____ Coin: ____
Other (please explain) ____
Identify all service features: ____

Name of serving Exchange Office: Ceiba
Location of Exchange Office: Julian Rivera #29 South
Ceiba P.R.
Type of Switch: DMS-100

Provide a detailed layout and description of the loop facility serving this customer including the following information and any other relevant data:

Provide: Identify all cable segments from the main frame to the customer drop.
For each segment provide the length, gauge, cable type, and size (count).
Identify all bridge taps and provide location, gauge and lengths.
Identify aerial, buried and underground cables.
Identify any SLC systems used.
Identify any distribution cross connect points

If Available: Approximate age of facility and Growth rate.

If Available: Provide information on Drop Facilities: Type, length, etc.
This data is of particular interest for high rise buildings.

If Available: Provide information on customer station equipment.

Please provide a copy of the past year's Trouble History Record.

Last reports:

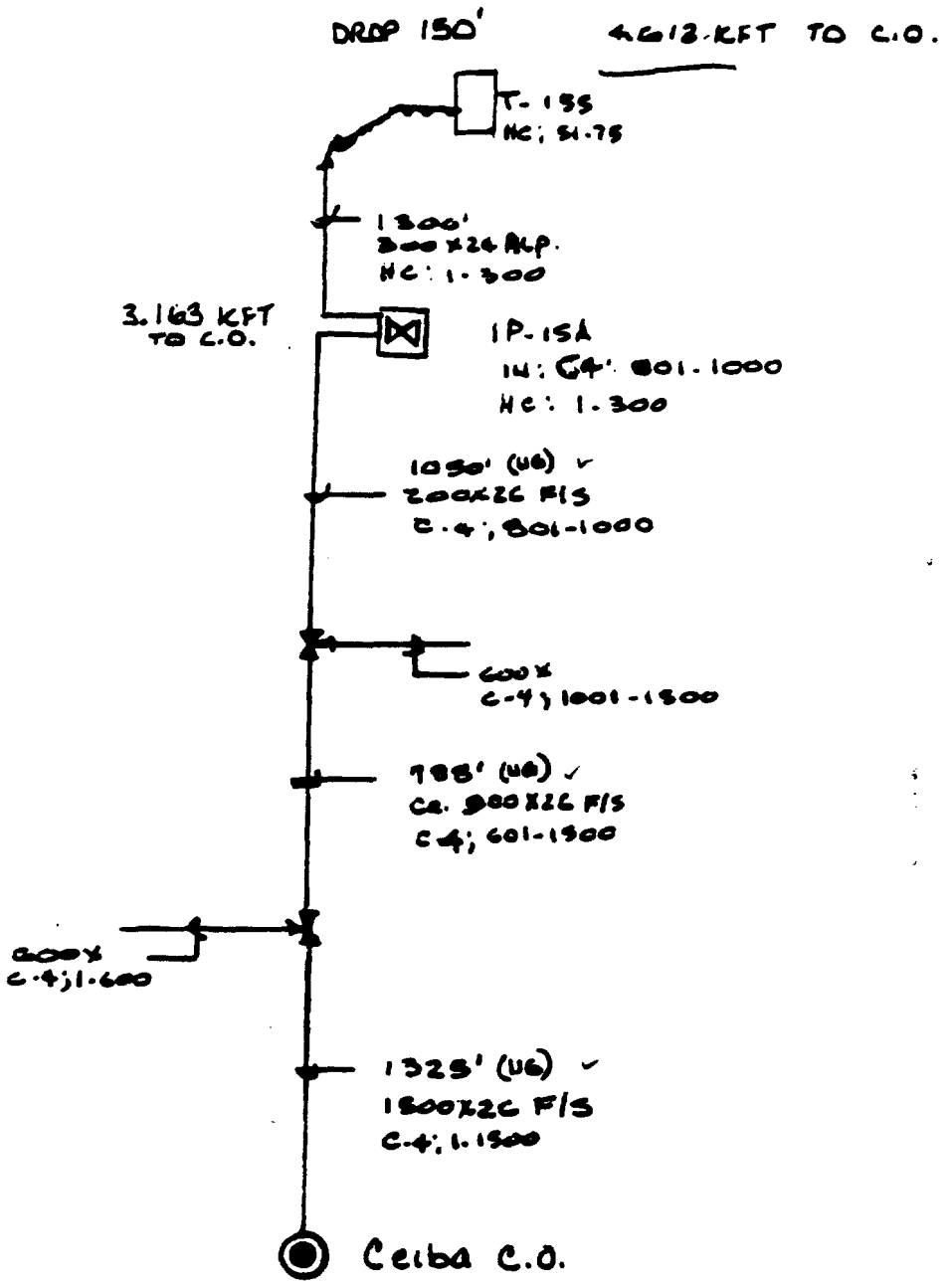

LOOP SCHEMATIC

I-8 CALLE 8

JARDINES DE CEIBA

885-3894

C-4; PAR 809

HC; PAR 73

Loop Survey Questionnaire

Name of person completing this form: EDWIN GRAFALS
Title: _____ Phone: 749-3579

Customer Line Number: 757-6650
Customer Service Address: AB-19 MONSERRATE AVE.
VALLE ARRIBA HEIGHTS, CAROLINA

Characteristics of location: Urban: X Residential: X
Rural: _____ Farm: _____
Commercial: _____ Industrial: _____

Type of building: Single unit: X Multi-Unit: _____ High rise: _____
Store: _____ Offices: _____ Industrial: _____
Other (please explain): _____

Type of Service: Residential: _____ Business: X
PBX: _____ Coin: _____
Other (please explain) _____
Identify all service features: _____

Name of serving Exchange Office: CAROLINA C.O.
Location of Exchange Office: STATE ROAD # 190
BO. SABANA ABAJO, CAROLINA

Type of Switch: DMS-100

Provide a detailed layout and description of the loop facility serving this customer including the following information and any other relevant data:

Provide: Identify all cable segments from the main frame to the customer drop.
For each segment provide the length, gauge, cable type, and size (count).
Identify all bridge taps and provide location, gauge and lengths.
Identify aerial, buried and underground cables.
Identify any SLC systems used.
Identify any distribution cross connect points

If Available: Approximate age of facility and Growth rate.

If Available: Provide information on Drop Facilities: Type, length, etc.
This data is of particular interest for high rise buildings.

If Available: Provide information on customer station equipment.

Please provide a copy of the past year's Trouble History Record.
LAST REPORT — 3/13/91

NUMBER
50

CA08;148
IP-218; 976

(3)

IP-218

IN: 900X24 JF
C-19;1101-1200+1801-1850+
C-8;126-300+C-39;426-500+500XD

OUT: 900X24 JF
IP-218;1-900
300X24 JF
IP-218;901-1200

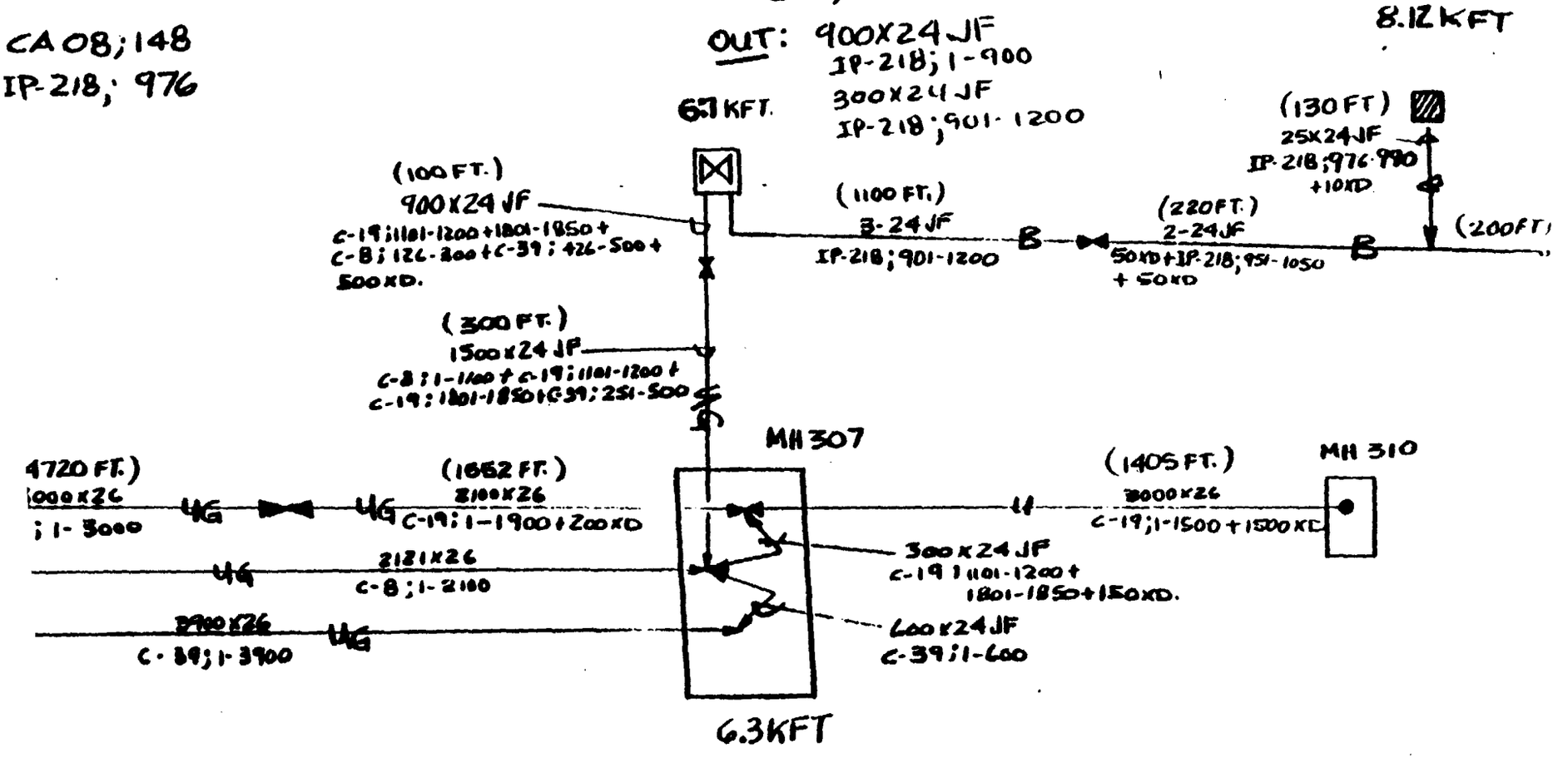

8/22

Loop Survey Questionnaire

Name of person completing this form: Jose E. Rodriguez
Title: O.P. PLANNER Phone: 792-5020

Customer Line Number: 833-7441
Customer Service Address: P.R. # 2 KM. 151.7
LAS CARIBEAS WARD

Characteristics of location: Urban: ____ Residential: ✓
Rural: ✓ Farm: ____
Commercial: ____ Industrial: ____

Type of building: Single unit: ✓ Multi-Unit: ____ High rise: ____
Store: ____ Offices: ____ Industrial: ____
Other (please explain): ____

Type of Service: Residential: ✓ Business: ____
PBX: ____ Coin: ____
Other (please explain) ____
Identify all service features: ____

Name of serving Exchange Office: MAYAGUEZ
Location of Exchange Office: SOUTH POST # 112
MAYAGUEZ
Type of Switch: DMS-100

Provide a detailed layout and description of the loop facility serving this customer including the following information and any other relevant data:

Provide: Identify all cable segments from the main frame to the customer drop.
For each segment provide the length, gauge, cable type, and size (count).
Identify all bridge taps and provide location, gauge and lengths.
Identify aerial, buried and underground cables.
Identify any SLC systems used.
Identify any distribution cross connect points

If Available: Approximate age of facility and Growth rate.

If Available: Provide information on Drop Facilities: Type, length, etc.
This data is of particular interest for high rise buildings.

If Available: Provide information on customer station equipment.

LOOP SCHEMATIC

(4) P.R. # 2 KM. 151.7 LAS CAISEAS Ward

MAYAGUEZ

Fecha C-THRU

Posibles -

11/14

11/15

11/20
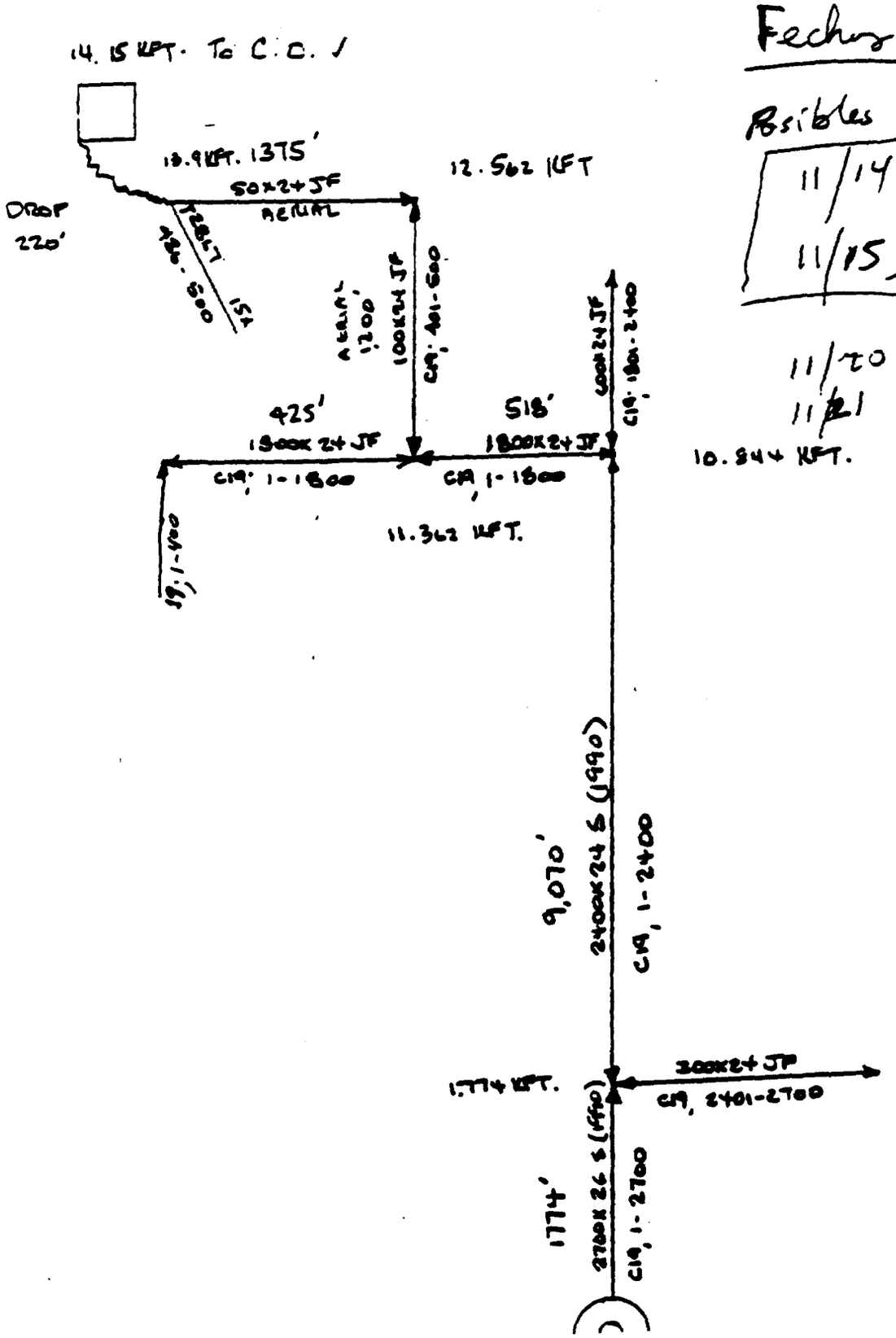
11/21