EX PARTE OR LATE FILED

WILEY, REIN & FIELDING

DOCKET FILE COPY ORIGINAL

1776 K STREET, N.W.
WASHINGTON, D.C. 20006
(202) 429-7000

ERIC W. DESILVA
(202) 828-3182
EDESILVA@WRF.COM

FACSIMILE
(202) 828-4969

September 18, 1997

RECEIVED
SEP 18 1997
FEDERAL COMMUNICATIONS COMMISSION
OFFICE OF THE SECRETARY

William Caton, Acting Secretary
Federal Communications Commission
1919 M Street, N.W.; Room 222
Washington, DC 20554

Re: Notification of an *Ex Parte* Presentation in ET Docket No. 96-102

Dear Mr. Caton:

This letter is to notify you of an *ex parte* presentation in the above-reference docket. On September 16, 1997, Donald Johnson from NCR Corporation; Jim McDonald from Motorola, Inc.; Wayne Moyers, from Wise Communications; Jay Padgett from Lucent Technologies, Inc.; and, Eric DeSilva from Wiley, Rein & Fielding, met with Julius Knapp, Charles Iseman, John Reed, Philip Inglis, and Tom Derenge from the Office of Engineering and Technology to discuss issues summarized in the attached leave-behinds. WINForum also suggested a specific wording change to the rules in the docket and a modification to a proposed definition in the WINForum reconsideration petition that are not fully disclosed in the leave-behinds. Accordingly, WINForum provides below the two changes, with additions double-underlined and deletions struck through:

> Section 15.403(b) *Peak Transmit Power*. The peak power output as measured over an interval of time equal to the frame ~~rate~~ or transmission burst duration of the device under all conditions of modulation. . . .
>
> Section 15.403(e) *Transmit Power*. The total energy transmitted over a time interval of at most 30/B ~~(where B is the 26-dB emission bandwidth of the signal) or the duration of the transmission pulse,~~ or the on transmission interval duration, whichever is less (where B is the emission bandwidth of the signal), divided by the time interval.

No. of Copies rec'd 0+1
List ABCDE

Please contact the undersigned should any questions arise concerning this notification.

Sincerely,

Eric W. DeSilva

cc: Julius Knapp
Charles Iseman
John Reed
Philip Inglis
Tom Derenge

Summary of the WINForum Reconsideration Petition

Point 1: Devices should be permitted to operate across the lower-middle band boundary.

Consider an example device with 25 MHz bandwidth that occupies spectrum in both middle and lower bands. Does it operate in the lower or the middle band?

If it operates in the middle band then it must obey the 15.407 (b) out-of-band limits at and below the lower-middle band boundary, even though this boundary is within the U-NII band. If it operates in the lower band then it must follow the lower band rules on indoor operation only and power level, but need not follow the out-of-band limits at and above the boundary.

WINForum understands that the lower band interpretation is intended and asks for this clarification in the reconsideration petition; that is, the example device should be considered to operate in the lower band if it occupies spectrum in both bands. This would require it to operate with the indoor only restriction and at the lower band maximum power level.

Point 2: The out-of-band emissions limitations with regard to the restricted band limits should be clarified.

Section 15.407 (b) appears to cover the out-of-band emission limits. However, Section 15.407 (b) (5) requires compliance with Section 15.209 which specifies another set of emission limits. Section 15.209 establishes the bands immediately above the 5.25-5.35 GHz middle band and immediately below the 5.15-5.25 GHz lower band as restricted bands subject to special restricted band rules. These rules put severe limitations on the out-of-band emissions.

WINForum asks for relaxation of the restricted band rules for a 20 MHz wide band immediately above the middle band and immediately below the lower band. The 15.407 (b) out-of-band emissions specifications would apply in these 20 MHz bands.

Point 3: The frequency stability requirements should be eliminated.

The frequency stability requirements of Section 15.407 (g) appear to be superfluous or at least premature since the rules do not specify actual frequencies.

Point 4: The output power and power spectral density limits should be revised to avoid disadvantaging broadband systems.

The 1 MHz measurement bandwidth for power permits the power spectral density of devices with a bandwidth less than 1 MHz to be higher than those above 1 MHz. That is, the actual power is permitted to be the same in systems with a bandwidth less than 1 MHz as is permitted in systems with a bandwidth of 1 MHz or more. This is a severe disadvantage for wide bandwidth devices operating in the same physical region as the narrow bandwidth devices. To help alleviate this disadvantage for wide bandwidth devices, WINForum requests that 1) the power be specified in a form X[1] dBm + 10 Log B where B is the 26 dB bandwidth and that 2) a 3 dB tolerance in power spectral density (PSD) be permitted to allow for systems that do not have a flat in-band spectrum.

Point 5: The out-of-band emission limits should be stated relative to the in-band limits, rather than relative to actual transmitted power.

15.407 (b) specifies out-of-band limits relative to the actual in-band power spectral density (PSD). Devices which do not meet the limits at full power cannot meet the limits just by lowering the power of the overall spectrum mask. The reconsideration petition requests that the limits be stated relative to the <u>allowed</u> in-band PSD. This would allow devices to meet the specifications by lowering their output power.

---

[1] X is 4 dBm for the 5.150 to 5.250 MHz band, and 11 dBm for the 5.250 to 5.350 MHz band, and 17 dBm for the 5.725 to 5.825 MHz band

① **Point 6: The total power output should be specified in a manner that accurately represents the interference potential of U-NII devices.**

This is a very important point. If it is not allowed, some very efficient modulation techniques will be severely penalized.

15.407 (a) specifies limits on the "peak transmit power". The peak envelope power of modulation techniques such as OFDM and other spectrum efficient methods exceeds the average power by significant amounts. Thus, setting the limits on the peak envelope power rather than the average power will create a large disadvantage to these efficient modulation techniques. On the other hand, these variable envelope emissions create no more interference in potential victim receivers than does constant envelope emissions.

WINForum, in the petition, urges the Commission to specify the power output of U-NII transmitters in a manner that is independent of symbol-to-symbol envelope variations and which neither understates nor overstates the actual power of the device from the perspective of its interference potential. The ANSI C63.17 testing rules for unlicensed PCS devices are cited as an example of a means of specifying power levels that achieve this objective and a technical analysis on the subject is presented in an attachment (reference 5, Annex C, of the first SRDC paper).

② **Point 7: The definition and measurement of power spectral density should be clarified.**

This too is a very important point that could severely reduce the permissible power level.

Section 15.407 (a) (5) and 15.407 (b) set controls on the peak power spectral density or the peak levels of emissions as measured in a 1 MHz filter. The levels specified would require that the full band power be 6 to 10 dB lower than otherwise specified in 15.407 (a). If the peak envelope power out of a spectrum analyzer resolution filter is taken as the PSD, the measured PSD will exceed the true PSD by the peak-to-average ratio of the filter output, which can be in the range of approximately 6 to 10 dB. The effect will be to penalize the device under test by that amount.

The following is from the reconsideration petition and defines the problem:

> "The use of peak detection for measuring PSD has two other undesirable effects. First, it favors devices with emission bandwidths on the order of 1 MHz, if a 1-MHz resolution filter is used. Since all of the power of the 1-MHz device will fall within the bandwidth of the resolution filter, the peak-to-average ratio of the filter output for the 1-MHz device will be limited to the actual peak-to-average ratio of the modulation, which typically is much lower than for the noise-like filter output that results from a wideband input to the filter. Second, for a wideband (e.g., 20 MHz bandwidth) emission, it may be necessary to compute the total power output by integrating the power measured with a resolution bandwidth that is much less than the emission bandwidth of the device, since the maximum resolution bandwidth of most commercial spectrum analyzers is 2 to 3 MHz. If peak detection is used, the total computed power output would be 6 to 10 dB greater than the actual power output. Again, the effect would be to penalize the U-NII device by this amount. As an example, a 10-dB penalty would in effect reduce the limits on total power output to 5 mW in the 5150-5250 MHz band, 25 mW in the 5250-5350 MHz band, and 100 mW in the 5725-5825 MHz band. The result would be to reduce the service area, under free-space conditions, by 90 percent."

The SRDC also did an extensive analysis on the question of specifying and measuring PSD. This too was covered in the technical attachments to the reconsideration petition (references 4 and 5 of the first SRDC paper).

③ **Point 8: Special rules should be implemented to control wideband impulse transmission techniques.**

Some types of devices transmit signals of very short duration (10 ns and less) with very high power. Such devices tend to be highly disruptive because of their very wide emission bandwidth and the difficulty of detecting and measuring their presence. WINForum states in the petition that special considerations for measurement techniques for these impulse transmission systems are needed.

WINForum has been consulting with the NTIA on this question before the reconsideration petition was filed and continues to do. The SRDC is attempting to develop a specification and measurement method for

such systems that will permit the PSD and power level concerns to be resolved properly for legitimate systems while being comprehensive enough to prevent disruptive uses of the U-NII band.

Point 9: The U-NII device definition should be modified to require U-NII devices to utilize digital modulation techniques.

WINForum requested a change in the definition of U-NII devices to make it clearer that digital modulation is required.

Section 15.403(a) defines U-NII devices as "Intentional radiators operating in the frequency bands 5.15-5.35 GHz and 5.725-5.825 GHz that provide a wide array of wideband, high data rate, digital, mobile and fixed communications for individuals, businesses, and institutions."

The proposed definition is:

15. 403 (a) U-NII devices [Unlicensed]. Intentional radiators operating in the frequency bands 5.15-5.35 GHz and 5.725-5.825 GHz that use wideband digital modulation techniques and provide a wide array of high data rate mobile and fixed communications for individuals, businesses, and institutions.

WINFORUM
Wireless Information Networks Forum, Inc.
1200 19th. Street, NW, Suite 300
Washington, DC 20036

January 3, 1996

Mr. Julius Knapp
Federal Communications Commission
435 Oakland Mills Road
Columbia, MD 21046

Dear Mr. Knapp,

WINForum proposes a clarification of the term "transmit power" as used in the definition of peak transmit power in section 15.303 (f) of Subpart D. We seek to clarify that, the following further definition adopted by ANSI C63.7 is acceptable.

> **Transmit power**: The total energy transmitted over a time interval of at most 30/B (where B is the emission bandwidth of the signal), divided by the interval duration.

The definition of peak transmit power in subpart D is

> **15.303 (f) Peak transmit power**. The peak power output as measured over an interval of time equal to the frame rate or transmission burst of the device under all conditions of modulation. Usually this parameter is measured as a conducted emission by direct connection of a calibrated test instrument to the equipment under test. If the device cannot be connected directly, alternative techniques acceptable to the Commission may be used.

This further definition is consistent with the original WINForum proposal for subpart D. It is also consistent with the overall aim of controlling the interference potential of compliant devices without compromising the value of advanced digital modulation techniques that may be used to optimize spectrum utilization.

The RF power level is, of necessity, measured over some time interval. The peak envelope power is the power measured over the maximum amplitude cycle of the signal, while the average power is normally measured "during an interval of time that is long compared to the lowest frequency encountered in the modulation taken under normal conditions". (The definitions are paraphrased from ITU definitions 151 and 152). Peak power for digitally modulated signals should be defined over an interval of length somewhere between these extremes.

One cycle of a signal at the 2 GHz UPCS frequency is 0.5 ns. Measurement over this interval would require a measurement bandwidth that is a significant fraction of the carrier frequency. Thus, it is necessary from a measurement standpoint to use an interval of duration in the order of 1/B or greater. Further, there is justification for setting the interval for a UPCS signal to as high as 30/B:

1. The interference potential of a wideband digitally modulated signal is related to the level over a longer sustained time. The delay spread normally encountered in the UPCS environment will cause an other discontinuous envelope signal to have a variable envelope at the point of interference. Also, in an interference limited environment, the composite interference will consist of a number of interfering signals and thus have a variable envelope. For these reasons it is unnecessary to control the power over a single cycle in order to control the interference potential.
2. Efficient modulation techniques have envelope variations that occur over time intervals related to the digital symbol time. Overall spectrum efficiency gains are possible if envelope variations over the proposed 30/B interval are permitted.

The correct choice of measurement interval depends upon a balance between the power penalty for variable envelope signals on the one hand and on limiting the interference potential on the other. The estimated power penalty for a signal envelope that varies as random white noise (multitone is an example) would be under 2 dB compared to a constant envelope signal of the same mean peak power. This type of signal is considered to have the maximum envelope variability of legitimate digitally modulated signals.

The 30/B interval is approximately the time needed to send 20 digital symbols (40 bits with 4 level signaling). This interval is too short for a transmitter to gain a power level advantage by, for example, sending short bursts of high power.

J. Ron Cross
President

Note: Signed and sent January 4, 1966. DCJ

POWER SPECTRAL DENSITY (PSD) MEASUREMENT

Background

- When a "wideband" information-modulated signal is passed through a "narrowband" filter, the filter output has statistical properties that approach those of Gaussian noise.
- The "rough" appearance of a single-sweep analyzer trace using sample detection is a manifestation of this phenomenon.
- The average filter output power is the actual PSD multiplied by the filter noise bandwidth.
- Even if the input signal has a relatively low peak-to-average ratio (e.g., 0 to 3 dB), the filter output can have a peak-to-average ratio exceeding 10 dB, depending on the ratio of the filter bandwidth to the signal bandwidth.
- Theoretical studies and experiments have been done, and confirm this phenomenon (see the attachments to WINForum's Petition for Reconsideration for details of the analyses and experimental results).

PSD MEASUREMENT

Impact on U-NII Devices

- In the U-NII spectrum, PSD is the primary control on power output, using a 1-MHz measurement filter (e.g., resolution filter on a spectrum analyzer).
- Signal bandwidths in the range of 20 MHz are expected.
- Using a peak measurement of PSD (such as "peak hold" on an analyzer) will overstate the true PSD by an error that can approach 10 dB.
- To accurately determine, the resolution filter output must be averaged in some manner.

PSD MEASUREMENT

Interference Implications

- The average resolution filter output power is the average "noise" from the U-NII device that would be seen by a victim receiver with the same intermediate frequency (IF) bandwidth.

- Receiver performance is typically characterized by the bit error rate (BER) vs. E_b/N_0 in the presence of Gaussian noise, where E_b is the average energy per bit and N_0 is the average noise power spectral density (watts/Hz).

- Equivalently, the BER can be shown vs. C/N, where C is the average carrier power during transmission and N is the average Gaussian noise power over the receiver's channel bandwidth.

- A U-NII transmission (or multiple U-NII transmissions) will have an effect on a victim receiver that is, at worst, the same as that of Gaussian noise with the same average power, since the peak-to-average ratio will be no greater than that of Gaussian noise.

PSD MEASUREMENT

Interference Implications - Continued

- Therefore, from an interference-control viewpoint, the limits on PSD should be based on the average resolution filter power output while the device is transmitting at maximum power (if power control is used).

- In the U-NII proceeding, calculations of the effect of U-NII interference to the Mobile Satellite Service (MSS), by both U-NII and MSS proponents, were based on treating the aggregate U-NII interference as additive Gaussian noise.

- The PSD limits established in the *Report and Order* therefore reflect levels of the actual PSD (as measured by averaging the resolution filter output power), not the measured peak, that were judged to be sufficiently low by the Commission to protect the MSS interests.

Annex C: Power Spectral Density (Informative)

Introduction

Limits on in-band and out-of-band power spectral density (PSD) are typically specified by regulatory agencies to control interference among different services and devices. The purpose of this Annex is to explain the relationship between PSD and actual signal measurements (e.g., with a spectrum analyzer), and to show why accurate PSD measurements require averaging of multiple individual measurements.

The instantaneous power per Hz, for an information-bearing signal, is inherently a random process with a mean equal to the actual PSD. The average power output from a narrowband (relative to the signal) measurement filter (e.g., a spectrum analyzer resolution filter) is the PSD at the filter center frequency multiplied by the filter noise bandwidth. The instantaneous filter output is a random process. As the bandwidth of the measurement filter becomes smaller compared to the signal bandwidth, the distribution of the filter output voltage approaches Gaussian, so the envelope distribution approaches Rayleigh and the envelope power distribution approaches exponential. Since a narrow resolution bandwidth (relative to the signal bandwidth) is typically used to measure the power spectrum, the filter power output therefore can be approximated as an exponentially-distributed random variable with a mean equal to the PSD at the filter center frequency multiplied by the filter noise bandwidth. Therefore, because of the large variability in the filter output,[1] multiple samples must be averaged to obtain an accurate measure of the PSD. While the use of a "peak hold" measurement on a spectrum analyzer provides a smooth trace, it can overstate the PSD by an error on the order of 10 dB.

Definition of Power Spectral Density

The power spectrum or power spectral density (PSD) is the most meaningful measure of the "spectrum" of an information-modulated signal, which is inherently a random process. The PSD is the average power per unit bandwidth, as a function of frequency. PSD is defined mathematically, for a stationary random process $\mathbf{x}(t)$, as the Fourier transform of the autocorrelation function:

$$S_{\mathbf{xx}}(f) = \int_{-\infty}^{\infty} R_{\mathbf{xx}}(\tau) e^{-j2\pi f\tau} d\tau \text{ watts/Hz} \tag{1}$$

where the autocorrelation is:

$$R_{\mathbf{xx}}(\tau) = E[\mathbf{x}(t)\mathbf{x}(t+\tau)] \tag{2}$$

[1] This phenomenon is the reason that a single-sweep trace on a spectrum analyzer (with normal or sample detection) appears "rough".

with $E[\cdot]$ denoting expectation (i.e., statistical average value). For an information-bearing signal consisting of a sequence of symbols with duration T_s, the autocorrelation will be non-zero only within a symbol or two of $\tau = 0$. That is, $R_{\mathbf{xx}}(\tau) = 0, |\tau| > T_C$ where T_C depends on the baseband pulse-shaping, but typically will be on the order of a few symbol times.

Relationship Between PSD and the Fourier Transform of a Signal

Assuming the expectation in (2) is taken only over time intervals during which actual transmission is occurring, the PSD represents the *average* power per Hz, as a function of frequency, during transmission. This can be seen by considering the Fourier transform, observed at time t, of a transmission that starts at time 0:

$$X(f,t) \equiv \int_0^t x(\tau) e^{-j2\pi f\tau} d\tau . \tag{3}$$

Clearly, $X(f,t)$ is a random function, since it is derived from the random signal $x(t)$. The energy spectral density at time t is $|X(f,t)|^2$ joules/Hz and the instantaneous power per Hz is $d|X(f,t)|^2/dt$. The expected value of this is the actual power spectral density, as can be seen from:

$$|X(f,t)|^2 = X(f,t)X^*(f,t) = \int_0^t dt_2 \int_0^t x(t_2)x(t_1) e^{-j2\pi f(t_1-t_2)} dt_1 , \tag{4}$$

which has an expected value:

$$E\left[|X(f,t)|^2\right] = \int_0^t dt_2 \int_0^t R_{\mathbf{xx}}(t_1 - t_2) e^{-j2\pi f(t_1-t_2)} dt_1 . \tag{5}$$

Substituting $\tau = t_1 - t_2$ and $\xi = t_1 + t_2$ (see Figure C-1), the area element in the new coordinate system is

$$d\tau d\xi = \left| \frac{\partial\tau}{\partial t_1}\frac{\partial\xi}{\partial t_2} - \frac{\partial\tau}{\partial t_2}\frac{\partial\xi}{\partial t_1} \right| dt_1 dt_2 = 2dt_1 dt_2 , \tag{6}$$

and (5) becomes:

$$E\left[|X(f,t)|^2\right] = \frac{1}{2}\int_{-t}^{t} R_{\mathbf{xx}}(\tau) e^{-j2\pi f\tau} d\tau \int_{|\tau|}^{2t-|\tau|} d\xi = \int_{-t}^{t} R_{\mathbf{xx}}(\tau) e^{-j2\pi f\tau} (t - |\tau|) d\tau . \tag{7}$$

Since $R_{\mathbf{xx}}(\tau) = 0$ for $\tau > T_C$,

$$E\left[|X(f,t)|^2\right] = \int_{-T_C}^{T_C} R_{\mathbf{xx}}(\tau) e^{-j2\pi f\tau} (t - |\tau|) d\tau, \quad \text{for } t \geq T_C. \tag{8}$$

The instantaneous power per Hz is

$$\phi_x(f,t) \equiv \frac{d}{dt}|X(f,t)|^2 \quad \text{watts/Hz} \tag{9}$$

and its expected value, when the observation time exceeds T_C is

$$E[\phi_x(f,t)] = \frac{d}{dt}E\left[|X(f,t)|^2\right] = \int_{-T_C}^{T_C} R_{\mathbf{xx}}(\tau) e^{-j2\pi f\tau} d\tau = S_{\mathbf{xx}}(f), \quad t \geq T_C. \tag{10}$$

Hence, the power per Hz $\phi_x(f,t)$ is itself a random process, and its expected value is the PSD of the process $\mathbf{x}(t)$.

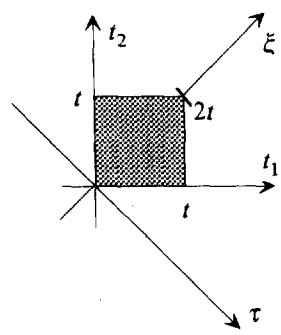

Figure C-1: *Coordinate transformation for (6) and (7).*

Spectrum Analyzer Resolution Filter Output

A spectrum analyzer effectively sweeps a narrowband resolution filter across the signal passband, and the filter output signal controls the instrument's display, which gives a representation of the signal spectral content. To specify appropriate measurement procedures for PSD, it is necessary to understand the relationship between the PSD and the output of the spectrum analyzer resolution filter.

Let $h(t)$ represent the impulse response of the resolution filter, and its Fourier transform $H(f)$ the corresponding frequency-domain transfer function. It is assumed that the filter is

causal (i.e., $h(t) = 0$ for $t < 0$), and that transmission begins at time 0. The filter output $y(t)$ is then given by the convolution integral:

$$y(t) = \int_0^t x(\tau)h(t-\tau)d\tau . \tag{11}$$

The filter has some time constant t_h (that is, $h(t) \approx 0$ for $t > t_h$) which varies inversely with its bandwidth. It is assumed here that the duration of the transmission is large compared to t_h, and transient effects are ignored, in which case (11) can be written as:

$$\begin{aligned} y(t) &= \int_0^t x(\tau)d\tau \int_{-\infty}^{\infty} H(f)e^{j2\pi f(t-\tau)}df = \int_{-\infty}^{\infty} H(f)e^{j2\pi ft}df \int_0^t x(\tau)e^{-j2\pi f\tau}d\tau \\ &= \int_{-\infty}^{\infty} H(f)X(f,t)e^{j2\pi ft}df \quad t >> t_h \end{aligned} \tag{12}$$

The power spectrum of $y(t)$ is related to that of $x(t)$ by:

$$S_{yy}(f) = |H(f)|^2 S_{xx}(f) \tag{13}$$

and

$$E[y^2(t)] = \int_{-\infty}^{\infty} S_{yy}(f)df = \int_{-\infty}^{\infty} S_{xx}(f)|H(f)|^2 df , \quad t >> t_h . \tag{14}$$

If the filter has a nominal center frequency f_0 and an effective noise bandwidth B_N, defined as:

$$B_N = \frac{\int_0^{\infty} |H(f)|^2 df}{|H(f_0)|^2} , \tag{15}$$

then for $B_N << 1/T_s$ $S_{xx}(f)$ is relatively constant over the filter passband, and:

$$E[y^2(t)] \cong 2B_N |H(f_0)|^2 S_{xx}(f_0). \tag{16}$$

Generally, the spectrum analyzer display is normalized so that in effect, $|H(f_0)| = 1$. The factor of 2 in (16) accounts for the fact that all frequency functions, including the PSD $S_{xx}(f)$, are assumed to be two-sided for mathematical symmetry.

Statistical Properties of the Resolution Filter Output

The output of the resolution filter is a random process, since the input is a random process. It has been shown that the average (expected) value of the filter power output is proportional to the filter bandwidth and the PSD of the signal being measured. What remains is to characterize the statistical properties of the filter output.

In general, the resolution filter output as a time function is given by:

$$y(t) = x(t) * h(t) = \int_{-\infty}^{\infty} x(\tau) h(t-\tau) d\tau, \tag{17}$$

where $*$ denotes convolution. Equivalently, in the frequency domain,

$$Y(f) = H(f) X(f). \tag{18}$$

An important class of signals is that for which a single carrier of frequency f_c is amplitude- and/or phase-modulated, which in general can be represented by:

$$x(t) = r(t)\cos[2\pi f_c t + \theta(t)] = \mathrm{Re}\left\{v(t) e^{j2\pi f_c t}\right\}, \tag{19}$$

where $v(t) = r(t) e^{j\theta(t)}$ and $\mathrm{Re}\{\cdot\}$ denotes the real part of the argument. In the frequency domain,

$$X(f) = \frac{1}{2} V(f - f_c) + \frac{1}{2} V^*(-f - f_c). \tag{20}$$

The process $x(t)$ is assumed to be <u>bandpass</u>; that is $1/T_s << f_c$. Note that $v(t)$, sometimes called the "complex envelope" of $x(t)$, is actually a low-pass version of $x(t)$. The filter output $y(t)$ can be expressed in a similar form:

$$y(t) = \mathrm{Re}\left\{w(t) e^{j2\pi f_0 t}\right\} \tag{21a}$$

$$Y(f) = \frac{1}{2} W(f - f_0) + \frac{1}{2} W^*(-f - f_0) \tag{21b}$$

It is assumed in (21) that the nominal filter center frequency is f_0 and the filter is narrowband compared to $x(t)$.

The (bandpass) filter response may also be expressed in terms of an equivalent lowpass response $H_{lp}(f)$:[2]

$$H(f) = H_{lp}(f - f_0) + H_{lp}^*(-f - f_0). \tag{22}$$

Since $x(t)$, $h(t)$, and $y(t)$ are real, their transforms are conjugate-symmetric; e.g., $X(f) = X^*(-f)$. Therefore, it is possible to analyze the filter output based on positive frequencies only, and eqs. (18) and (20)-(22) give:

$$W(f - f_0) = V(f - f_c)H_{lp}(f - f_0). \tag{23}$$

Letting $\Delta_f = f_c - f_0$,

$$W(f) = V(f - \Delta_f)H_{lp}(f) \tag{24}$$

and

$$w(t) = h_{lp}(t) * \left[v(t)e^{j2\pi\Delta_f t}\right] = \int_{-\infty}^{\infty} h_{lp}(t - \tau)v(\tau)e^{j2\pi\Delta_f \tau}d\tau, \tag{25}$$

or, letting $V_\Delta(f) \equiv V(f - \Delta_f)$, so $v_\Delta(t) = v(t)e^{j2\pi\Delta_f t} = r(t)e^{j[\theta(t)+2\pi\Delta_f t]}$, gives:

$$w(t) = \int_{-\infty}^{\infty} h_{lp}(t - \tau)v_\Delta(\tau)d\tau \tag{26}$$

Figure C-2 gives an illustrative example of the relationships among the various frequency-domain functions.

In general, both $h_{lp}(t)$ and $v_\Delta(t)$ are complex, and can be expressed in terms of real time functions as:

$$h_{lp}(t) = p(t) + jq(t) \tag{27a}$$

$$v_\Delta(t) = a(t) + jb(t), \tag{27b}$$

[2] The "center frequency" can be selected arbitrarily within limits, but typically would be the geometric center of the one-sided frequency response characteristic.

where $p(t)$, $q(t)$, $a(t)$, and $b(t)$ are real.

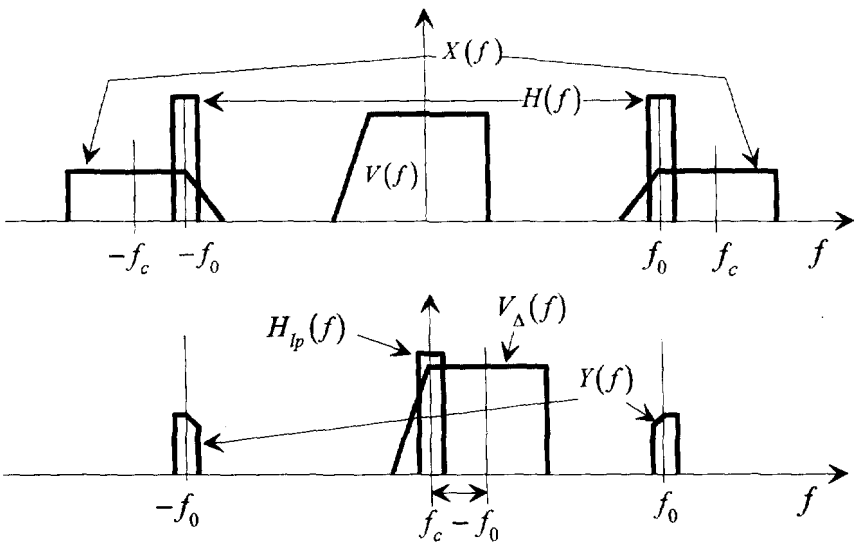

Figure C-2: *Example signal spectra and filter characteristic*

It is well known (and can be easily shown) that if and only if the process $v_\Delta(t)$ is wide-sense stationary, then[3] $R_{aa}(\tau) = R_{bb}(\tau)$ and $R_{ab}(\tau) = -R_{ba}(\tau)$. Since (by definition) $R_{ba}(\tau) = R_{ab}(-\tau)$, it follows that $R_{ab}(\tau) = -R_{ab}(-\tau)$; that is, $R_{ab}(\tau)$ is odd. Therefore, $R_{ab}(0) = 0$; i.e., $a(t)$ and $b(t)$ are uncorrelated, although $a(t)$ and $b(t+\tau)$ may be correlated.

The equivalent lowpass filter output can be written in terms of real and imaginary components as

$$w(t) = c(t) + jd(t) \tag{28}$$

where, from (27),

$$c(t) = a(t) * p(t) - b(t) * q(t) \tag{29a}$$

$$d(t) = b(t) * p(t) + a(t) * q(t) \tag{29b}$$

[3] See A. Papoulis, Probability, Random Variables, and Stochastic Processes, third edition, McGraw-Hill, 1991, section 11-3.

It can be shown explicitly (see the note at the end of this Annex) that $R_{cc}(\tau) = R_{dd}(\tau)$, $R_{cc}(\tau) = R_{cc}(-\tau)$, and $R_{dc}(\tau) = -R_{cd}(\tau)$, hence $R_{cd}(0) = 0$; that is, $c(t)$ and $d(t)$ are uncorrelated (it also follows that $w(t)$ is wide-sense stationary, as would be expected).

It also can be shown that when the input of a lowpass filter is a stationary random signal samples of which are independent if they are more than α seconds apart (as is the case here, with $\alpha = T_C$), then as the filter bandwidth becomes small relative to the bandwidth of the input signal, the distribution of the filter output approaches Gaussian.[4]

Conceptually, the reason for the approach to a Gaussian distribution is that the filter is effectively an integrator, and its integration time is inversely proportional to its bandwidth. Therefore, as the filter integration time becomes large compared to the correlation time T_C of the input process, the filter output is the sum of many independent integrated time-segments of the input process. The Central Limit Theorem suggests that the sum tends toward a Gaussian distribution.

Therefore, the convolution terms $a(t) * p(t)$, etc., in (29) tend toward Gaussian as the resolution filter bandwidth B_N becomes small relative to $1/T_s$ (which is proportional to the signal bandwidth). Consequently, $c(t)$ and $d(t)$ are random variables that approach Gaussian for $B_N << 1/T_s$. Since $c(t)$ and $d(t)$ are uncorrelated, they are also independent if they are Gaussian. It is well-known that signal envelope which is the quadrature sum of independent Gaussian terms is Rayleigh-distributed, and the square of the envelope (representing envelope power) is exponentially-distributed.[5] The envelope of $y(t)$ therefore approaches a Rayleigh distribution, and the envelope power an exponential distribution. Defining the envelope power as the average power over an RF cycle:

$$P_y(t) = \frac{|w(t)|^2}{2}, \tag{30}$$

it is clear from (16) that $P_y(t)$ can be expressed as:

$$P_y(t) = 2\psi(t) B_N \left|H(f_0)\right|^2 S_{\mathbf{xx}}(f_0), \tag{31}$$

where $\psi(t)$ is an exponentially-distributed random process with a mean value of 1. The probability density function (pdf) of $\psi(t)$ is

[4] A. Papoulis, "Narrow-Band Systems and Gaussianity," *IEEE Transactions on Information Theory*, vol. IT-18, no. 1, Jan. 1972, pp. 20-27.

[5] See, e.g., Papoulis, 1991, *op. cit.* p. 146.

$$f_{\psi}(x) = e^{-x}, \quad x \geq 0 \tag{32}$$

Figure C-3 shows the exponential distribution $F_{\psi}(x) = \Pr\{\psi < x\} = 1 - e^{-x}$, with $\overline{\psi} = 1$.

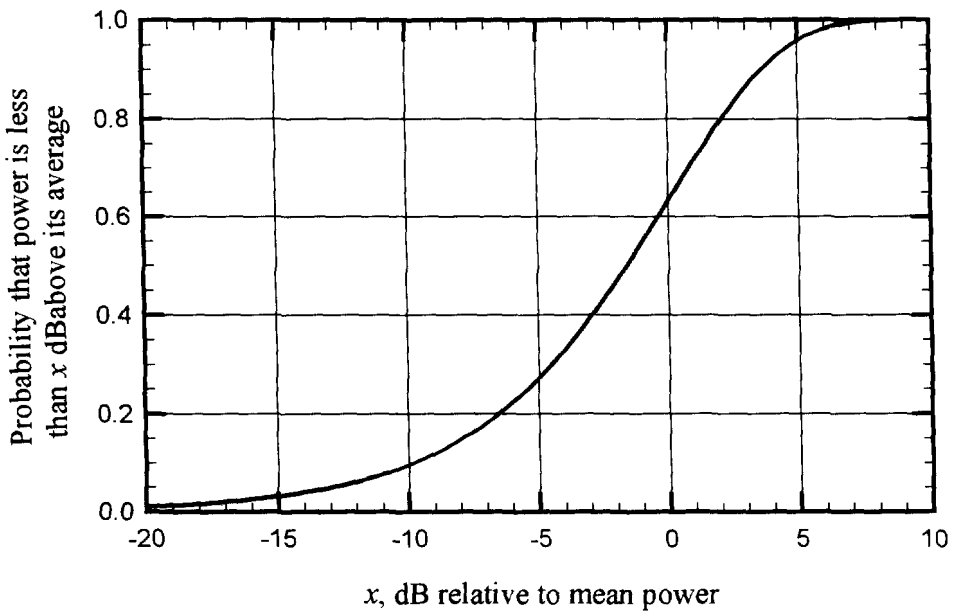

Figure C-3: *The exponential distribution*

If the maximum of many samples of the filter power output is used to estimate the PSD (e.g., using a spectrum analyzer's "peak hold" function), the error will be on the order of 8 to 10 dB, depending on how close the filter output power distribution is to exponential, and also depending on the sweep time.

However, if the filter output power is averaged over a time interval that is large compared to the inverse of the filter bandwidth, a good estimate of the actual PSD can be obtained. The averaging must be done on linear power samples, rather than on dB samples. For an exponential random variable, the dB error that will result from averaging dB samples can be computed by finding the average of $u = 10\log v$:

$$E[u] = \int_0^{\infty} 10\log v \cdot e^{-v} dv = \frac{10}{\ln 10}\int_0^{\infty} \ln v \cdot e^{-v} dv = -2.51\,\text{dB} \tag{33}$$

Thus, decibel average will be 2.51 dB less than the decibel value of the linear average.

Conclusion

It has been shown that the instantaneous power per Hz of a random (i.e., information-modulated) waveform is itself a random process with a mean equal to the actual power spectral density (power spectrum) of the signal. When measuring the PSD, the bandwidth of the measurement instrument is typically narrow relative to the signal bandwidth, to provide the necessary spectral resolution. When that is the case, the filter output envelope power is random with a distribution that approaches exponential and a mean that equals the PSD of the input signal at the filter center frequency, multiplied by the filter noise bandwidth. Because of the variability of the filter output, an accurate measure of the input signal PSD can be obtained only by averaging the output of the measurement filter in some manner. Otherwise, the measurement can overstate the PSD by an error on the order of 10 dB. Therefore, the use of a spectrum analyzer's peak hold or max hold function will not give an accurate PSD measurment, even though it provides a smooth visual trace.

NOTE:

Auto- and Cross-Correlation of the Filter Output In-Phase and Quadrature Terms

Assume that the jointly wide-sense stationary processes $\alpha(t)$ and $\beta(t)$ have cross-correlation $R_{\alpha\beta}(\tau)$ and cross power spectrum $S_{\alpha\beta}(f) = \int_{-\infty}^{\infty} R_{\alpha\beta}(\tau)e^{-j2\pi f\tau}d\tau$. If $\alpha(t)$ and $\beta(t)$ are applied to separate filters with respective impulse responses $p(t)$ and $q(t)$, and the respective outputs are $\gamma(t)$ and $\xi(t)$, then:

$$\gamma(t) = \alpha(t) * p(t)$$

$$\xi(t) = \beta(t) * q(t)$$

The cross-correlation of the outputs is

$$R_{\gamma\xi}(\tau) = E\left[\gamma^*(t)\xi(t+\tau)\right] = E\left[\int_{-\infty}^{\infty}\int_{-\infty}^{\infty}\alpha^*(t-v)\beta(t+\tau-u)p^*(v)q(u)dvdu\right].$$

Since $E\left[\alpha^*(t-v)\beta(t+\tau-u)\right] = R_{\alpha\beta}(\tau+v-u)$, this becomes:

$$R_{\gamma\xi}(\tau)\int_{-\infty}^{\infty}\int_{-\infty}^{\infty}R_{\alpha\beta}(\tau+v-u)p^*(v)q(u)dvdu.$$

Since $\int_{-\infty}^{\infty} R_{\alpha\beta}(\tau+v-u)q(u)du = R_{\alpha\beta}(\tau+v)*q(\tau+v) = \int_{-\infty}^{\infty} S_{\alpha\beta}(f)Q(f)e^{j2\pi f(\tau+v)}df$ (where the first equality follows from the definition of convolution and the second from the convolution theorem), then

$$R_{\gamma\xi}(\tau) = \int_{-\infty}^{\infty} S_{\alpha\beta}(f)Q(f)e^{j2\pi f\tau}df \int_{-\infty}^{\infty} p^*(v)e^{j2\pi fv}dv = \int_{-\infty}^{\infty} S_{\alpha\beta}(f)Q(f)P^*(f)e^{j2\pi f\tau}df.$$

This is in the form of an inverse Fourier transform, and it is evident that the cross power spectrum is

$$S_{\gamma\xi}(f) = S_{\alpha\beta}(f)Q(f)P^*(f).$$

Applying this result to $c(t)$ and $d(t)$ as defined in (29) gives:

$$S_{cd}(f) = S_{ab}(f)|P(f)|^2 - S_{ba}(f)|Q(f)|^2 + S_{aa}(f)P^*(f)Q(f) - S_{bb}(f)Q^*(f)P(f).$$

With $S_{ab}(f) = -S_{ba}(f)$ and $S_{aa}(f) = S_{bb}(f)$,

$$S_{cd}(f) = S_{aa}(f)\left[P^*(f)Q(f) - Q^*(f)P(f)\right] + S_{ab}(f)\left[|P(f)|^2 + |Q(f)|^2\right].$$

$S_{aa}(f)$, $|P(f)|^2$, and $|Q(f)|^2$ are real, even functions of frequency. $S_{ab}(f)$ and $P^*(f)Q(f) - Q^*(f)P(f)$ are imaginary and odd. Hence, $S_{cd}(f)$ is imaginary and odd. Moreover, $S_{dc}(f) = -S_{cd}(f)$, so $R_{dc}(\tau) = -R_{cd}(\tau)$, $R_{cd}(\tau) = -R_{cd}(-\tau)$, and $R_{cd}(0) = 0$. Therefore, $c(t)$ and $d(t)$ are uncorrelated, although $c(t)$ and $d(t+\tau)$ may be correlated.

Also,

$$S_{cc}(f) = S_{dd}(f) = S_{aa}(f)\left[|P(f)|^2 + |Q(f)|^2\right] + S_{ab}(f)\left[P(f)Q^*(f) - P^*(f)Q(f)\right],$$

which is real and even. Hence, $R_{cc}(\tau) = R_{dd}(\tau)$ and $R_{cc}(\tau) = R_{cc}(-\tau)$. Therefore, the process $w(t) = c(t) + jd(t)$ is wide-sense stationary.