ORIGINAL

DOCKET FILE COPY ORIGINAL

EX PARTE OR LATE FILED

McDERMOTT, WILL & EMERY

A Partnership Including Professional Corporations
1850 K Street, N.W.
Washington, DC 20006-2296
202-887-8000
Facsimile 202-778-8087

Boston
Chicago
Los Angeles
Miami
Newport Beach
New York
St. Petersburg (Russia)
Vilnius (Lithuania)
Washington, D.C.

Associated (Independent) Offices:
Barcelona London
Brussels Madrid
Lisbon Paris

Christine M. Gill
Attorney at Law
202-778-8283

September 24, 1997

HAND-DELIVERED

RECEIVED

SEP 24 1997

FEDERAL COMMUNICATIONS COMMISSION
OFFICE OF THE SECRETARY

William F. Caton
Acting Secretary
Federal Communications Commission
Office of the Secretary
1919 M Street, N.W.
Room 222
Washington, D.C 20554

Re: Notice of Oral and Written Ex Parte Presentation; In the Matter of Amendment of Rules and Policies Governing Pole Attachments; CS Docket No. 97-98

Dear Mr. Caton:

This is to notify the Office of the Secretary that Christine Gill and Catherine Krupka, attorneys with the law firm of McDermott, Will & Emery, and representatives from Duke Power Company and Florida Power and Light Company made an oral and written ex parte presentation to Meredith Jones, John Logan, Elizabeth Beaty and Margaret Egler of the Cable Services Bureau (the "FCC Staff"). An original and two copies of this notice are being filed with the Secretary's office.

The substance of the oral presentation to the FCC staff concerned the issues addressed in the Comments and Reply Comments filed on behalf of American Electric Power Service Corporation, Commonwealth Edison Company, Duke Power Company, Florida Power and Light Company and Northern States Power Company in the above-mentioned proceeding. The Comments and Reply Comments referenced herein are part of the record in CS Docket No. 97-98 and, therefore, have not been attached to this notice. In addition, written presentation materials regarding pole capacity were also distributed. A copy of the written presentation is attached hereto.

In accordance with the Section 1.1206 of the Federal Communications Commission rules, a copy of this notice and its

No. of Copies rec'd 0+1
List ABCDE

DOCKET FILE COPY ORIGINAL

attachments have been hand-delivered to Meredith Jones, John Logan, Elizabeth Beaty and Margaret Egler of the Cable Services Bureau.

Very truly yours,

Christine Gill

Christine C. Gill

cc: Meredith Jones
John Logan
Elizabeth Beaty
Margaret Egler

DOCKET FILE COPY ORIGINAL

Pole Capacity

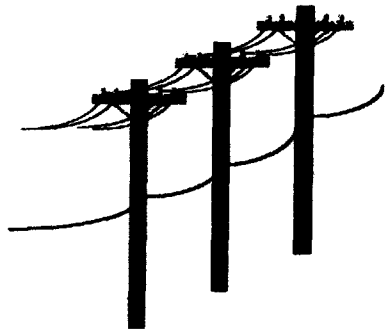

Is it Space?

Is it Engineering?

Do We Just Close Our Eyes?!

September 23, 1997
Presented by: the "Electric Utilities"
CS Docket 97-98

apacity

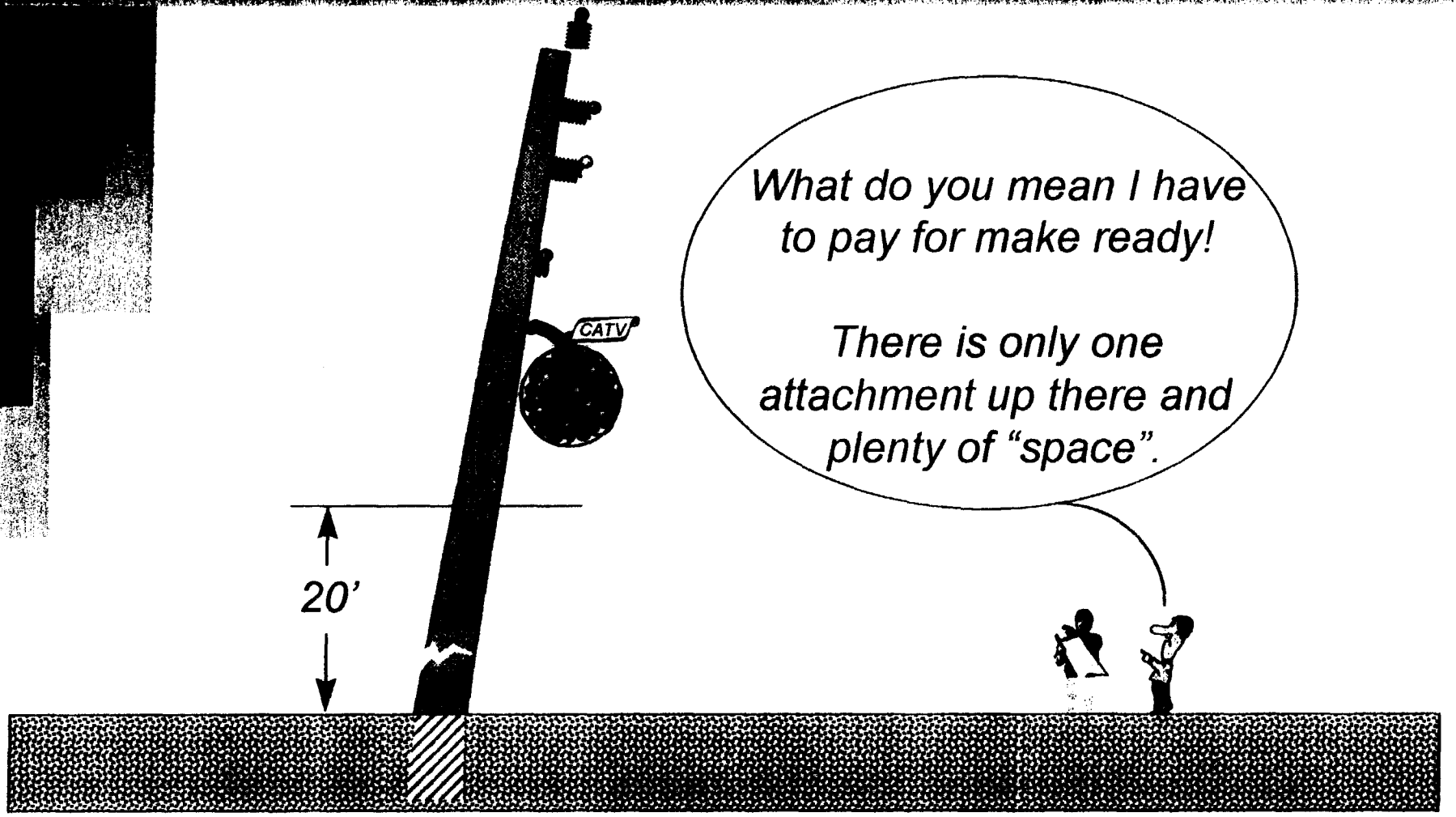
CATV
20'
What do you mean I have to pay for make ready!
There is only one attachment up there and plenty of "space".

efinitions

COPY ORIGINAL

SPACE is **NOT** usable,

if it cannot be used"

Therefore it is deemed

"Other than the Usable Space"

CC Hypothetical Model

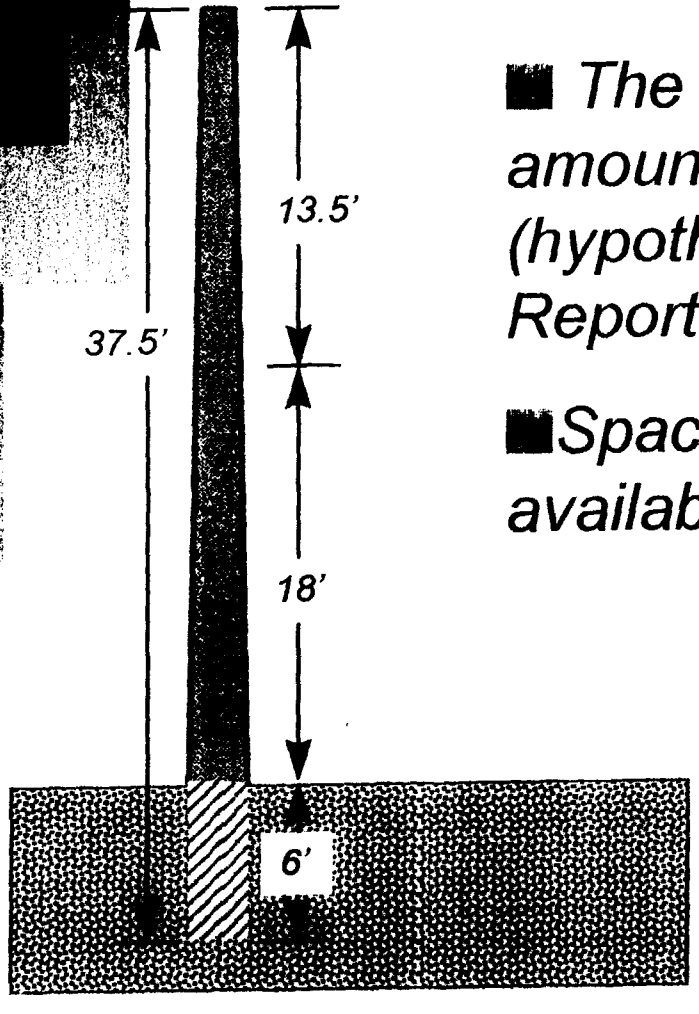

- *The FCC established 13.5' as the amount of usable space on an average (hypothetical) 37.5' pole. Second Report and Order, 72 F.C.C. 2d at 68.*
- *Space was based on vertical availability only.*

What Limits Usable Space?

- *The amount of available vertical space as limited by the NESC et al.*
- *The number of attachments that can be made, while not exceeding the Ultimate Strength (Capacity) of the pole.*
- *Various zoning ordinances that restrict clutter.*

pacity of the Pole

A pole is subjected to the following Stress:

- Axial Loading

(Function of the **weight** of the facilities)

- Torsional Loading

(Function of twisting forces i.e. disproportionate loads on cantilevered arms and brackets)

- Longitudinal Loading

(Function of disproportionate loads, i.e. varying span lengths)

- **Transverse Loading** (Wind Loading)
  - Typically **The Most Critical Loading**
  - **Independent** of the Facilities Weight!

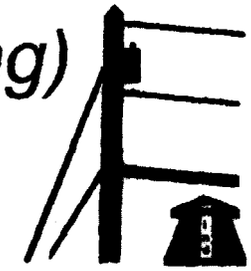

pacity (an example)

- Hypothetical 37.5' Class 5 Pole - Southern Yellow Pine
- Ultimate Fiber Stress 8000 lb./sq-in
- Washington D.C.
- The FCC suggests there is an average of 13.5' of usable space.*
- A fully loaded pole - based solely on vertical space - might look like this:

Weight:

4 Electric conductors, each @ 2/3 lb/ft
1 Electric Transformer @ 700 lb
1 CATV Feeder Cable @ .5 lb/ft
2 fiber cables each @ 0.1 lb/ft
1 LEC 100Pair Cable @ 3.2 lb/ft

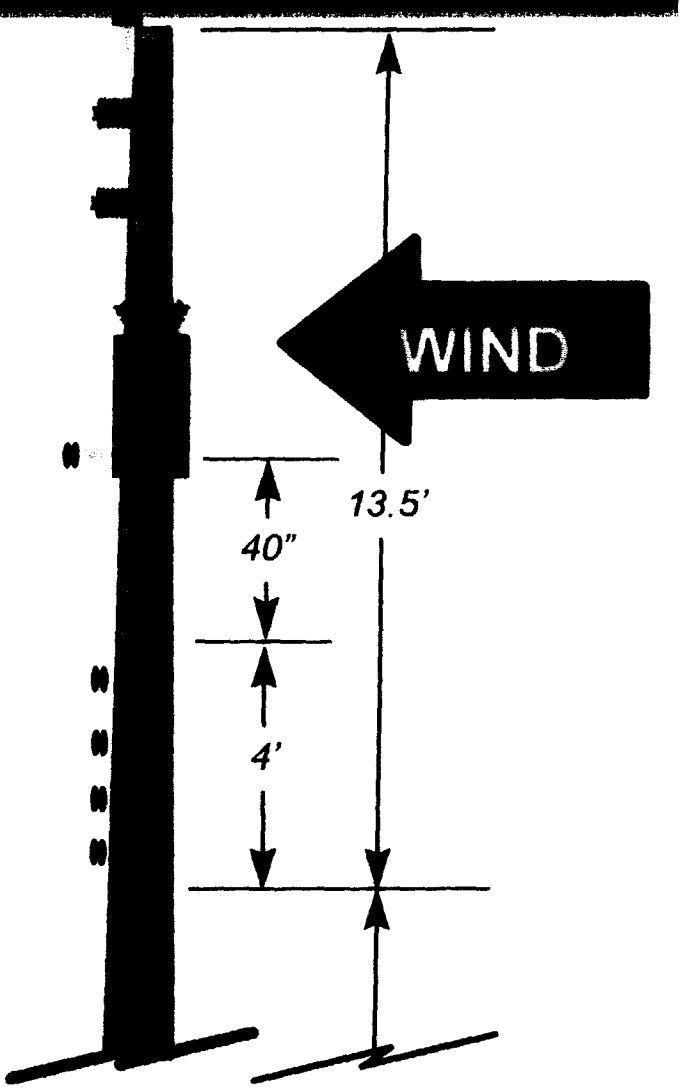

* Assuming the 40" safety space is usable.

pacity (Transverse Loading)

Calculating the impact of a 1/2" Fiber Cable

In simplest terms - The stress exerted on the pole by the fiber cable is equivalent to the cross sectional area of the cable (multiplied by a shape factor), multiplied by the wind pressure the structure must be designed for, times the distance to the base of the pole.

Weight is not a factor!

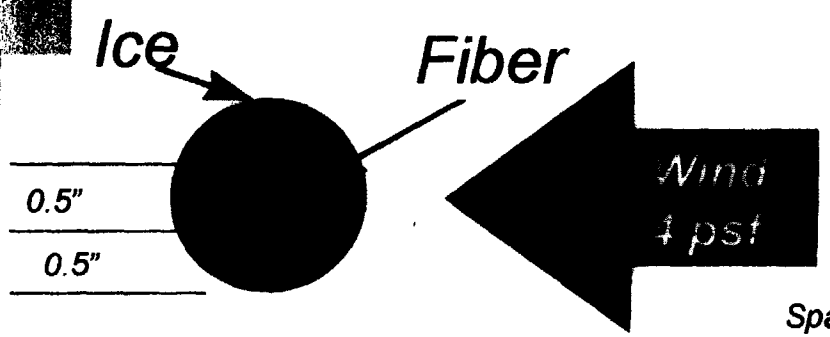

Cross Sectional Area= 1.5" (1) X 200' X 1/12	=	25 sq. ft
Wind Pressure	=	4 lb. / sq. ft
distance to base of pole	=	20 ft
Transverse Stress on the Pole	=	2,000 Ft - Lb

Span length = 200 ft

Note: **Though Ice is not a design factor in the South area of the United States, the design wind pressure is 9 PSF. This capacity effects the pole more than ice when the diameter of the cable is 2/3" or greater.**

DOCKET FILE COPY ORIGINAL

Capacity (Transverse Loading)

*Ultimate Pole Strength of the Pole = 12,000 - 19,000 Ft - Lb at installation and up to 16,000 - 35,000 Ft-lb before replacement.**

*Percent of capacity used by the 1/2" Fiber (attached or overlashed) cable will range from 2,000/12,000 = **17%** to 2,000/35,000 = **6%***

Percent Capacity	Cumulative
41 %	
9 %	
13 %	
12 %	
12 %	
11 %	
12 %	

* *The Ultimate Pole Strength will vary based on NESC Table 253-2, which assigns strength factors based on the construction standard requirements*

onclusion

*Usable Space is - Space that is **"capable of being used"** - not just vertical space that meets clearance requirements.*

*A fiber attachment is not a "straw" and can utilize 17% of the poles ultimate strength **regardless** of its weight.*

- *Overlashing does use space by the simple concept that it "**eliminates** previously available vertical space" by using virtually the same capacity as an attachment*
- *Overlashing without attachment fee has the effect of reducing Usable Space, - previously available vertical space is no longer **capable** of being used, - thus providing attachers no incentive to remove old unused facilities and leaving up barriers to competition.*