VERNER · LIIPFERT
BERNHARD · McPHERSON AND HAND
CHARTERED

901 - 15TH STREET, N.W.
WASHINGTON, D.C. 20005-2301
(202) 371-6000
FAX: (202) 371-6279

RECEIVED
SEP 25 1997
FEDERAL COMMUNICATIONS COMMISSION
OFFICE OF THE SECRETARY

WRITER'S DIRECT DIAL
(202) 371-6206

ORIGINAL

September 25, 1997

BY HAND

DOCKET FILE COPY ORIGINAL

Mr. William F. Caton
Acting Secretary
Federal Communications Commission
1919 M Street, N.W., Room 222
Washington, D.C. 20554

Re: Comments of Philips Electronics North America Corporation and Thomson Consumer Electronics, Inc. in CS Docket No. 95-184 and MM docket No. 92-260

Dear Mr. Caton:

Enclosed for filing please find the original and eight (8) copies of the Comments of Philips Electronics North America Corporation and Thomson Consumer Electronics, Inc. in the above-referenced dockets.

Please direct any questions that you may have to the undersigned.

Respectfully submitted,

Lawrence R. Sidman

Lawrence R. Sidman

Enclosures

No. of Copies rec'd 0+8
List ABCDE

VLDC01-199216.1

HOUSTON, TEXAS OFFICE
2600 TEXAS COMMERCE TOWER
600 TRAVIS
HOUSTON, TEXAS 77002
(713) 237-9034
FAX: (713) 237-1216

AUSTIN, TEXAS OFFICE
SAN JACINTO CENTER
98 SAN JACINTO BLVD., SUITE 1440
AUSTIN, TEXAS 78701
(512) 703-6000
FAX: (512) 703-6003

HONOLULU, HAWAII OFFICE
HAWAII TIMES BUILDING
928 NUUANU AVE., SUITE 400
HONOLULU, HAWAII 96817
(808) 566-0999
FAX: (808) 566-0995

McLEAN, VIRGINIA OFFICE
8280 GREENSBORO DRIVE
SUITE 601
McLEAN, VIRGINIA 22102
(703) 749-6000
FAX: (703) 749-6027

ORIGINAL

RECEIVED

SEP 25 1997

FEDERAL COMMUNICATIONS COMMISSION
OFFICE OF THE SECRETARY

Before the
FEDERAL COMMUNICATIONS COMMISSION
Washington, D.C. 20554

In the Matter of	)	
Telecommunications Services	)	CS Docket No. 95-184
Inside Wiring	)	
	)	
Customer Premises Equipment	)	
	)	
In the Matter of	)	
Implementation of the Cable	)	
Television Consumer Protection	)	MM Docket No. 92-260
and Competition Act of 1992	)	
	)	
Cable Home Wiring	)	

COMMENTS OF
PHILIPS ELECTRONICS NORTH AMERICA CORPORATION AND
THOMSON CONSUMER ELECTRONICS, INC.

Thomas B. Patton
Vice President, Government Relations
Philips Electronics North America Corporation
Franklin Square
1300 I Street, N.W.
Suite 1070 East
Washington, D.C. 20005
(202) 962-8550

Lawrence R. Sidman
Jessica A. Wallace
Verner, Liipfert, Bernhard,
McPherson & Hand, Chtd.
901 - 15th Street, N.W.
Suite 700
Washington, D.C. 20005
(202) 371-6000

Dave Arland
Manager, Government and Public Affairs
Thomson Consumer Electronics, Inc.
INH-110
P.O. Box 1976
Indianapolis, IN 46206
(317) 587-4832

Counsel for Philips Electronics N.A. Corporation and Thomson Consumer Electronics, Inc.

September 25, 1997

TABLE OF CONTENTS

I. INTRODUCTION and SUMMARY 1

II. WHILE THE COMMISSION IS CORRECT IN ITS ANALYSIS THAT ITS CURRENT CABLE INSIDE WIRING RULES ARE ANTICOMPETITIVE, ITS PROPOSED REMEDY IS FUNDAMENTALLY FLAWED BECAUSE IT IS SO LIMITED IN ITS APPLICATION 6
- A. Mandatory Access States Would Remain Anticompetitive 7
- B. Exclusive Contracts Are Permitted to Continue to Thwart Competition 7
- C. The MDU Owner Remains the Gatekeeper 8
- D. Such a Myopic Approach Blatantly Ignores the Symbiotic Relationship Between Many Landlords and Incumbent MVPDs 9

III. INSTEAD OF ADOPTING THE PROPOSAL IN THE FNPRM, THE COMMISSION SHOULD SIMPLY MOVE THE CABLE DEMARCATION POINT IN MDUS TO A PLACE DESIGNED TO ENHANCE COMPETITION 10
- A. The Cable Demarcation Point Must be Moved to be Consistent With Section 207 of the Telecommunications Act of 1996 10
- B. The Cable Demarcation Point in MDUs Must be Moved to Foster Competition Because the Current Demarcation Point is Anticompetitive and Needlessly Intrusive 11
- C. There Are Two Reasonable Alternatives to the Current Cable Demarcation Point the Commission Should Consider 12

IV. THE FLAWS CONTAINED IN THE COMMISSION'S PROPOSED FRAMEWORK MUST BE ADDRESSED 14

V. CONCLUSION 18

Before the
FEDERAL COMMUNICATIONS COMMISSION
Washington, D.C. 20554

In the Matter of	)	
	)	CS Docket No. 95-184
Telecommunications Services Inside Wiring	)	
	)	
Customer Premises Equipment	)	
	)	
	)	
In the Matter of	)	
	)	
Implementation of the Cable Television Consumer Protection and Competition Act of 1992	)	MM Docket No. 92-260
	)	
Cable Home Wiring	)	

COMMENTS OF
PHILIPS ELECTRONICS NORTH AMERICA CORPORATION AND THOMSON CONSUMER ELECTRONICS, INC.

Philips Electronics North America Corporation ("Philips") and Thomson Consumer Electronics, Inc. ("Thomson") submit these comments in the above-captioned Further Notice of Proposed Rulemaking ("Further Notice") to amend the Commission's inside wiring rules governing the disposition of cable inside wiring.

I. INTRODUCTION and SUMMARY

The direct interest of Philips and Thomson in this proceeding is to ensure that viewers residing within multiple dwelling units ("MDUs") are able to enjoy the abundant choice of programming available on direct broadcast satellite ("DBS") service, and starting next year, be able to experience the enormous enhancements to television viewing which will come with the

advent of digital television broadcasts, especially HDTV.[1/] As leading manufacturers of state-of-the-art consumer electronics products, including television sets, VCRs, and DBS receiving equipment, Philips and Thomson believe that consumers living in MDUs should not suffer discrimination in their viewing choices and experiences simply because they are not wealthy enough or do not choose to live in single family homes.

That view is reflected in Section 207 of the Telecommunications Act of 1996 [2/] which instructs the Federal Communications Commission to issue regulations prohibiting restrictions that "impair a viewer's ability to receive" programming services via the use of DBS, over-the-air broadcast and wireless cable antennas. Congress deemed that the viewer had a right to receive these services which could not be impeded by local governments, homeowners associations, cable service providers or building owners. This inside wiring proceeding and the Commission's ongoing proceeding implementing Section 207 are inextricably intertwined. If residents in MDUs are to be able to receive off-air digital broadcast signals and DBS services as envisioned by Section 207, [3/] they must be able to request placement of a receiving apparatus on the roof or on a balcony and be able to receive those signals in their living units. Section 207 explicitly covers the first leg of the journey of these services to the MDU dweller,

---

1/ Philips and Thomson are extremely proud to have been instrumental in the development of digital television service, initially as members of the Advanced Television Research Consortium and subsequently as participants in the "Grand Alliance".

2/ Telecommunications Act of 1996, § 207, Pub. L. No. 101-1-4, 104th Cong., 1st Sess. § 207, 110 Stat. 56, 114 (1996)).

3/ Philips and Thomson recognize that application of Section 207 to one-third of this nation's population currently residing in MDUs is an issue still pending before the Commission.

i.e., the receipt of the satellite or broadcast transmission by antenna. The Commission's inside wiring rules govern the second leg of the journey from the receiving apparatus on the roof of the MDU directly down to the individual apartment or condominium units. A viewer must have access to the signals at both points, for one without the other equates to an effective denial of service.

In addition to vindicating consumer choice, other extremely important public policy goals would be served by a coherent, integrated approach to Section 207 and cable inside wiring. The Commission and the Congress have unequivocally and repeatedly stressed the importance of promoting competition in the multichannel video programming distribution ("MVPD") market. The Commission and the Congress have both emphasized the importance of a rapid and consumer-friendly transition to digital television. This cable inside wiring proceeding and the Commission's pending Section 207 implementation proceeding should work in tandem to provide the much sought after effective competition in the multichannel video programming distribution ("MVPD") marketplace and also to create a favorable climate for the successful conversion to digital television. Rules in either proceeding which leave the roughly one-third of American households occupying units in MDUs unable to receive DBS, wireless cable or digital television services would seriously undermine these overarching public policy objectives.

In this FNPRM, the Commission recognizes that the current cable inside wiring rules operate as an anticompetitive barrier to entry to the MVPD market. However, the suggested solution falls far short of what is necessary to rectify the problem. The Commission's proposed rules do not apply where the incumbent cable operator has a contractual, statutory or

common law right to be in the MDU. These rules do not apply nationwide because they are inapplicable in the almost twenty (20) states having mandatory access laws permitting cable operators to serve MDUs, laws that generally favor incumbent cable operators. Furthermore, they do not reach those instances where the MDU owner is prohibited from selecting a competitor because an exclusive contract exists. Finally, the proposed rules do not apply unless the MDU owner decides that it is time to switch service. In such circumstances, the residents' wishes are rendered largely irrelevant because the MDU owner remains the gatekeeper.

The Commission must not shrink from propounding a solution it knows is necessary to enable competition and consumer choice to flourish. Accordingly, instead of adopting the compromise proposal embodied in this FNPRM, the Commission should simply move the cable demarcation point to a position that enables aspiring competitors to use already present cable inside wiring, i.e., at the lock box where the wiring enters the building or at the lockbox(es) within a building where the home run wire originates. The record in this proceeding is replete with support for this procompetitive remedy proffered by alternative MVPDs and consumer advocates. It would facilitate consumer access to new technologies such as DBS and digital television while minimizing the potential for structural or even cosmetic damage to the MDU. This solution is necessary to effectuate the statutory command of Section 207.

Assuming arguendo that the Commission adopts the proposal in the FNPRM, there are three specific defects that must be cured prior to implementation. The flawed proposal concludes that: (1) the cable demarcation point should be moved only when it is "truly

physically inaccessible" to an alterative service provider[4/]; (2) provides the incumbent cable operator with the option of removing the inside wiring prior to the expiration of a ninety (90) day notice period; and, (3) does not provide a sufficiently flexible mechanism to calculate the cost of the inside wiring should it be sold. If even some small procompetitive benefit is to be realized from this proposal, the Commission must ameliorate these specific flaws.

The following changes would improve the proposal (although it would remain deficient even were these modifications made). First, the Commission should permit the demarcation point to be moved in instances where gaining access to it would otherwise result in any modification or damage to the pre-existing construction in the MDUs. This recognizes and preserves the legitimate aesthetic interests of MDU owners in their buildings and eliminates the definitional difficulties associated with the "physically inaccessible" standard. Second, the Commission should require the incumbent cable operator to provide service until the new service provider is in a position to offer full and complete service. Absent a means to ensure a seamless transition from one MVPD to another, the threat of service disruption in the event of a change will operate as a major disincentive to changing service providers, and, thus, will impede competition and thwart consumer choice. Third, the Commission should require the cost of inside wiring sold to MDU owners or subscribers to "be no more than replacement cost". Without this flexibility, the proposed standard could shortchange subscribers.

4/ In the Matter of Telephone Service Inside Wiring (Customer Premises Equipment) and In the Matter of Implementation of the Cable Television Consumer Protection and Competition Act of 1992 (Cable Home Wiring), FCC 97-304, released August 28, 1997 (Further Notice of Proposed Rulemaking in CS Docket No. 95-184 in MM Docket No. 92-260) at ¶ 84 [hereinafter "FNPRM"].

II. WHILE THE COMMISSION IS CORRECT IN ITS ANALYSIS THAT ITS CURRENT CABLE INSIDE WIRING RULES ARE ANTICOMPETITIVE, ITS PROPOSED REMEDY IS FUNDAMENTALLY FLAWED BECAUSE IT IS SO LIMITED IN ITS APPLICATION

The Commission is certainly accurate in its analysis that its current inside wiring rules are anticompetitive and that "more is needed to foster the ability of subscribers who live in MDUs to choose among competitive service providers."[5/] In an effort to ameliorate this situation, the Commission proposes to establish procedures for the building-by-building and the unit-by-unit disposition of 1) home run wiring from the point where the wiring becomes dedicated to an individual unit to the cable demarcation point; and 2) home wiring from the demarcation point to the subscriber's customer premises equipment, usually the television.[6/] These procedures, however, fall far short of what is necessary to promote competition because they apply only in very limited circumstances, and, even then, only when the MDU owner decides to switch service. In fact, these proposed rules would not apply "where the incumbent provider has a contractual, statutory or common law right to maintain its home run wiring on the property".[7/]

5/ FNPRM, at ¶ 25.

6/ FNPRM, at ¶¶ 32, 76, 79.

7/ FNPRM, at ¶ 34.

A. Mandatory Access States Would Remain Anticompetitive

The proposed rules do not apply nationwide because they do not apply in the roughly twenty "mandatory access states" where MDU owners must permit a cable operator the opportunity to offer service. In other words, the proposed rules will have no effect in approximately forty percent of the states in the nation. This exclusion precludes the development of a comprehensive, national policy to promote competition in the MVPD marketplace, is in conflict with the preemptive provisions of Section 207, and is anticompetitive because the Commission recognizes that mandatory access laws "appear to benefit only the franchised cable operator" and not other providers.[8/] Competition is not furthered in these states because competitive cable providers and other non-cable MVPDs are often foreclosed from taking advantage of the mandatory access laws, thereby leaving an unlevel playing field where statutes designed to promote consumer access to video service are transformed into vehicles for denying consumers choice among competing MVPDs. This exclusion alone would be sufficient to negate the efficacy of the proposed changes.

B. Exclusive Contracts Are Permitted to Continue to Thwart Competition

Moreover, the NPRM's approach is deficient because it fails to address the anticompetitive effects of exclusive contracts. Exclusive contracts preclude MDU owners for a protracted period of time from selecting among alternative service providers. This is the very right the Commission maintains it wants MDU owners to exercise. Again the Commission's proposed changes are ineffective in providing consumer choice because even if an MDU owner

---

8/ FNPRM, at ¶ 29.

wants to act on behalf of a resident and select another provider, these rules have no applicability when an exclusive contract exists. Exclusive contracts for MDUs serve as a major impediment to the introduction of genuine competition for cable services to MDU residents. Many MDUs are often tied up in an exclusive arrangement.[9/] Moreover, incumbent cable operators tend to focus their efforts on securing exclusive contracts with larger MDUs because such buildings house a large number of viewers. The FNPRM's "carve out" of MDUs in which an exclusive contract with an incumbent cable provider exists coupled with the Commission's failure to address the anticompetitive impact of such exclusive contracts through a companion rule so limits the utility of these rules changes as to make them barely worth the effort.

C. The MDU Owner Remains the Gatekeeper.

Instead of considering this pivotal issue from the viewer's perspective, the Commission leaves the MDU owner as the "gatekeeper," choosing if and when a competing MVPD provider may offer service to a substantial number of viewers residing in MDUs. This is an untenable position due to the Commission's belief that certain ongoing actions of property owners already "may deny the MDU residents the ability to choose among competing service providers, thereby contravening the purposes of the Communications Act."[10/] Specifically, the

---

9/ FNPRM, at ¶ 31; Annual Assessment of the Status of Competition in the Market for the Delivery of Video Programming, 12 FCC 4358 (1997) (Third Annual Report), at ¶ 198; Comments of Ameritech, In the Matter of Annual Assessment of the Status of Competition in Markets for the Delivery of video Programming, FCC 96 496, filed July 23, 1997 (In Response to Notice of Inquiry in CS Docket No. 96-133) at 29.

10/ FNPRM, at ¶ 26.

Commission cites "the difficulty for some service providers to obtain access to the property for the purpose of running additional home run wires to subscribers' units" due to the strenuous objections of MDU property owners, as one of the primary competitive problems facing MDUs.[11/]

D. Such a Myopic Approach Blatantly Ignores the Symbiotic Relationship Between Many Landlords and Incumbent MVPDs

The Commission's proposed rules fail to address the reality that an MDU owner may not want to switch service in the first place. Many MDU owners have a financial incentive to suppress competition in an MDU by permitting the continuation of the incumbent provider's service notwithstanding the wishes of the tenants. Through such arrangements, incumbent cable operators may effectively insulate themselves from competition and deny consumers a choice among alternative providers.

Unfortunately, the proposed procedures do nothing to empower the viewer to elect choice in service. From the viewer's perspective, he/she is left in precisely the same situation the Commission was trying to change, namely, still lacking the ability to choose among competing providers. Indeed, the framework proposed by the Commission leaves complete and absolute control in the MDU owner's hands, who is not required to consider the preferences of its tenants. If the MDU owner declines to switch service, the viewer is forced to make a Hobson's choice, accept service from the video provider your landlord chooses or from no one at all.

11/ FNPRM, at ¶ 25.

III. INSTEAD OF ADOPTING THE PROPOSAL IN THE FNPRM, THE COMMISSION SHOULD SIMPLY MOVE THE CABLE DEMARCATION POINT IN MDUS TO A PLACE DESIGNED TO ENHANCE COMPETITION

A. The Cable Demarcation Point Must be Moved to be Consistent With Section 207 of the Telecommunications Act of 1996

By moving the cable demarcation point to a location that integrates the mandate of Section 207 of the Telecommunications Act of 1996, the Commission will foster effective competition and simultaneously ensure that the purpose of Section 207 is not thwarted. Section 207 charges the Commission to craft rules that prohibit "restrictions that impair a viewer's ability to receive video programming services through devices designed for over-the-air reception of television broadcast signals, multichannel multipoint distribution service, or direct broadcast satellite service."[12/] The plain language of the statute clearly applies to restrictions on all viewers, not just homeowners. Nothing in Section 207 or the Act's legislative history supports any distinction between viewers who are homeowners and viewers who are renters.[13/] To the contrary, the Act and the legislative history both clearly state that

---

12/ Pub. L. No. 104, 104th Cong., 1st Sess. § 207, 110 Stat. 56, 114 (1996).

13/ See, Comments of Philips and Thomson, In the Matter of Implementation of Section 207 of the Telecommunications Act of 1996 (Restrictions on Over-the-Air Reception Devices, Television Broadcast Service and Multichannel Multipoint Distribution Service), filed Sept. 26, 1996, (Further Notice of Proposed Rulemaking in CS Docket No. 96-83) at 2; Reply Comments of Philips and Thomson, filed Oct. 28, 1996, (Further Notice of Proposed Rulemaking in CS Docket No. 96-83) at 2. These Comments and Reply Comments are incorporated herein by reference.

the purpose of the legislation is to increase access of all Americans to telecommunications services.[14/]

The unimpeded viewer access to DBS, broadcast and MMDS services required by Section 207 means not only the ability to install a dish or some other receiving device but also requires the ability to bring a signal from that antenna into a viewer's premises within the MDU. Should the signal's journey stop short of completion, viewers located in MDUs will be barred from realizing the benefits contained in Section 207. This inside wiring proceeding and the pending Section 207 proceeding are each two halves of an equation that can equal competition if the Commission crafts rules that complement each other. It is imperative that the Commission adopt inside wiring rules which ensure that the intent and objective of Section 207 are realized.

B. The Cable Demarcation Point in MDUs Must be Moved to Foster Competition Because the Current Demarcation Point is Anticompetitive and Needlessly Intrusive

The Commission recognizes that the current demarcation point in MDUs may impede competition,[15/] yet the proposed changes fail to move the demarcation point. The current cable

---

14/ See e.g., Telecommunications Act of 1996, Pub. L. No. 104-104, 110 Stat. 56 (1996) (providing in the preamble: "[a]n Act to promote competition and reduce regulation in order to secure lower prices and higher quality services for American telecommunications consumers and encourage the rapid deployment of new telecommunications technologies"); see also, H.R. Conf. Rep. No. 458, 104th Cong., 2d Sess. 1 (1996) (providing that the legislation is "to provide for a procompetitive, deregulatory national policy framework designed to accelerate rapidly private sector deployment of advanced telecommunications and information technologies and services to all Americans by opening all telecommunications markets to competition").

15/ In the Matter of Telecommunications Services Inside Wiring, Customer Premises

(continued...)

demarcation point for MDUs forces new competitors to expend vast amounts of financial resources to duplicate and overbuild the entire inside wiring to reach individual subscribers.[16] Such overbuilding is needlessly intrusive from an MDU owner's perspective. Indeed, the record before the Commission vividly illustrates the fact that MDU owners often object to the installation of multiple home run wires for a number of reasons, thereby obstructing competition and denying consumer choice.[17]

C. There Are Two Reasonable Alternatives to the Current Cable Demarcation Point the Commission Should Consider

The most procompetitive option for the Commission to consider is moving the MDU cable demarcation point to the lockbox just outside the building. It is technically simple for competitors because it provides ease of connection to the entire MDU cable plant. It is least intrusive to the MDU owner because it minimizes installation of wiring and electrical devices already present within the building. Finally, because it prevents aspiring competitors from expending vast financial resources to overbuild an entire cable wiring network, it is the most elegant and lowest cost solution. Moreover, it allows subscribers to enjoy selecting from an array of providers in the shortest practicable time frame.

In the alternative, the Commission should move the MDU demarcation point to the lockbox where the home run wire originates. This is a reasonable compromise between the

---

15/ (...continued)
Equipment, released January 26, 1996 (Notice of Proposed Rulemaking in CS Docket No. 95-184) at ¶ 17[hereinafter "Notice"].

16/ FNPRM, at ¶¶ 25, 26.

17/ Id.

current anticompetitive demarcation point and the most progressive option of a lockbox at the point of entry to the MDU. This option enables competitive providers to utilize the home run wires, reducing costs of providing alternative services. It also allays some of the MDU owner's concerns by avoiding the need to overbuild the home run wire, which again, may only done with considerable intrusion and cost. The diagrams appended to these Comments as Attachment 1 depict the potential configurations permitted by these proposed changes to the cable demarcation point.

These two reasonable options have the further benefit of allowing the efficient use of all available bandwidth by a number of competing providers. Were the cable demarcation point shifted as described above, the Commission would enable multiple video programming service providers to offer their services efficiently over a single wire through complimentary bandwidth. For example, cable and DBS services operate on different frequencies and thus could be transported to the viewer's premises over a single wire. In this regard, Thomson and Philips agree that "[t]o foster competition, existing wiring within MDUs needs to be available for different service providers, sometimes with multiple service providers sharing a single wire."[18/] The concept of wiring sharing by competing video service providers facilitates freedom of choice for MDU residents, minimizes the cost and inconvenience of overbuilding for competing providers, and is minimally intrusive from the perspective of MDU owners.

18/ See, Comments of DirecTV, In the Matter of Telecommunications Services Inside Wiring, Customer Premises Equipment, released January 26, 1996 (Notice of Proposed Rulemaking in CS Docket 95-184) at 2.

Moreover, it is an extremely spectrum efficient application, fulfilling an additional important national telecommunications policy objective

IV. THE FLAWS CONTAINED IN THE COMMISSION'S PROPOSED FRAMEWORK MUST BE ADDRESSED

Assuming arguendo that the Commission adopts the proposal in the FNPRM, there remain three flaws that must be addressed. The Commission's FNPRM incorrectly: (1) concludes that the cable demarcation point should be moved only when it is "truly physically inaccessible" to an alterative service provider[19/]; (2) permits the incumbent cable operator to terminate service before the ninety (90) day notice period expires and remove the cable home run wiring; and finally, (3) does not provide the appropriate mechanism to calculate the cost of the inside wiring should it be sold. These three deficiencies translate directly into significant harm to consumers and aspiring competitors alike, and must be ameliorated.

There are many who complain that the current cable demarcation point can be physically inaccessible, often buried behind sheetrock or embedded in concrete. This physical inaccessibility stymies competition due to the fact that many MDU owners absolutely refuse to allow aspiring competitors access to these cable demarcation points because of the general inconvenience and likely damage to property.

In response, the Commission's proposed procedural framework permits that in instances where the cable demarcation point is "truly physically inaccessible to an alterative service provider (e.g. embedded in brick, metal conduit or cinder block, not simply within hallway molding), the demarcation point should be moved back to a point at which it first

---

19/ FNPRM, at ¶ 84.

becomes physically accessible."[20] Correspondingly, this permitted change is provided for in Section 76.5 of the proposed rules.[21] However, the term "truly physically inaccessible" is not defined, leaving MDU owners, incumbent cable operators, and potential alternative service providers unclear as to the specific set of circumstances in which the demarcation point could be moved without violating the Commission's rules. Virtually all cable demarcation points are "physically accessible" with a sledge hammer, drill, or saw. While, that certainly may not be what the Commission had in mind when it crafted this proposal, the Commission should realize that there are incumbent cable operators who may very well interpret the rules in precisely this manner, in an attempt to maintain their stranglehold on the MDU filled with a captive audience.

Therefore, it is critical that there be a practical "bright line" test which should maximize the potential for competition and minimize the potential for property damage. Accordingly, Philips and Thomson suggest that the Commission amend its proposed rule to provide that the cable demarcation point is to be moved if the requested access would cause any modification or damage to the pre-existing construction in the MDU. Such a clarification would protect the property rights of MDU owners, who are concerned with the inconvenience and potential damage to property caused by new providers seeking to attach to the demarcation point. Moreover, it also would eliminate the opportunity for incumbent cable operators to prevent competition in MDUs by arguing physical accessibility to the cable demaraction point

---

20/ Id.

21/ FNPRM, at Appendix D.

is present when, in fact, it is not, or where the consequences of leaving the cable demarcation point 12 inches outside the customer's premises would be to increase dramatically the costs of converting to an alternative MVPD..

Second, Section 76.804 of the Commission's proposed rules shortsightedly provide the incumbent cable operator with the option of terminating service before the end of the 90-day notice period and removing the cable home run wiring.[22/] This rule is flawed because it has the ability to cause a disruption in video service to subscribers residing in MDUs which, in and of itself, operates as a major disincentive to the development of competition. Should the Commission's proposed rules be implemented, the incumbent provider has a golden opportunity to create mischief by deciding to terminate service quickly and remove the wiring subsequent to learning that its services are no longer desired by the MDU owner. If the aspiring competitor is unable to install new wires immediately the entire MDU may be without service. The mere threat of that scenario unfolding puts the incumbent at a competitive advantage because no one wants to be without service, and the MDU owner may be disinclined to entertain bids by aspiring competitors.

Moreover, the proposed rule changes fail to promote competition because aspiring competitors still have no assurances about the actions of the incumbent provider. While the incumbent provider may initially elect to remove its home run wiring and force the new competitive provider to expend vast amounts of time and financial resources to overbuild the entire inside wiring infrastructure within the MDU, it may subsequently decide to abandon the

---

22/ FNPRM, at ¶¶ 35, 39 and Appendix D.

wiring. The proposed rules contain no constraints on the incumbent to refrain from engaging in such anticompetitive conduct. In the alternative, the incumbent may be truthful in its declaration that it intends to remove the wiring. However, competition is harmed in this situation as well because the costs of replacing the wiring are substantial and, in many cases, needlessly incurred if high quality service could be provided using the pre-existing wiring. The removal option needlessly drives up costs of changing service providers, which likely will be passed on to subscribers.

A seamless transition in video service for MDU residents switching service is critical if competition is to blossom. Otherwise, there is a substantial disincentive to switch service in the first place. Therefore, the Commission should craft its rules to incorporate the premise that incumbent providers should be required to continue providing service throughout the transition period. Such a requirement would ensure that viewers enjoy the benefits of competition undiminished by any unnecessary breaks in service.

Third, the Commission's proposed framework does not provide the appropriate mechanism to calculate the cost of the inside wiring should it be sold. Specifically, the Commission proposes to amend Section 76.802(a) to permit subscribers, in the unit-by-unit disposition of home wiring, to purchase the cable home wiring "at the replacement cost"[23/] and permit the parties to negotiate the price. This formulation creates the potential for MDU residents to pay excessive and unfair prices for the cable home wiring. For example, if the incumbent cable owner had fully depreciated the wire, it would not be entitled to any payment

---

23/ FNPRM, at Appendix D.

for it. Establishing the purchase price at replacement cost would yield a windfall to the incumbent cable operator. To avoid this eventuality, the proposed rules should be amended to provide that the viewer may purchase the home run wiring at "no more than the replacement cost."

V. CONCLUSION

For the reasons stated above, the Commission should decline to adopt the proposal in the FNPRM and, instead, should move the cable demarcation point to the lock box at the point of entry to the building or at the point of origination of the home run wire to achieve the guaranteed access by viewers to broadcast, DBS and wireless cable services mandated by Section 207. Should the Commission adopt the FNPRM's proposal notwithstanding the views expressed in the Comments, it should, at a minimum, modify the proposal, as described above, to provide even some very small measure of improvement over the current anticompetitive regime.

Respectfully submitted,

Lawrence R. Sidman
Jessica A. Wallace
Verner, Liipfert, Bernhard
McPherson & Hand, Chtd.
901 - 15th Street, N.W.
Suite 700
Washington, D.C. 20005
(202) 371-6000

Counsel for Philips Electronics North America Corporation and Thomson Consumer Electronics, Inc.

Thomas B. Patton
Vice President, Government Relations
Philips Electronics North America Corporation
Franklin Square
1300 I Street, N.W.
Suite 1070 East
Washington, D.C. 20005
(202) 962-8550

Dave Arland
Manager, Government and Public Affairs
Thomson Consumer Electronics, Inc.
INH-110
P.O. Box 1976
Indianapolis, IN 46206
(317) 587-4832

US OFFICE PRODUCTS

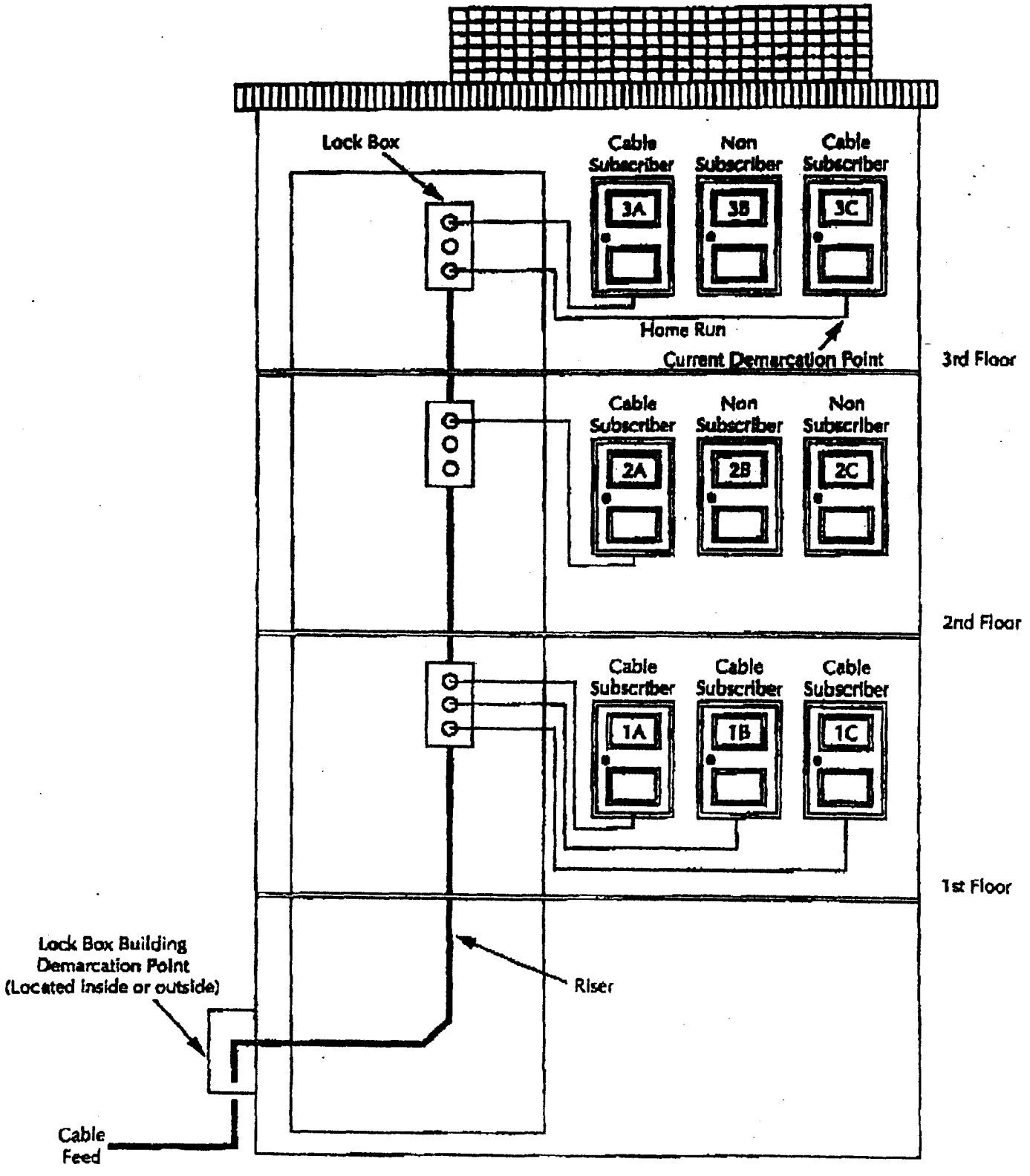

Single Incumbent Service

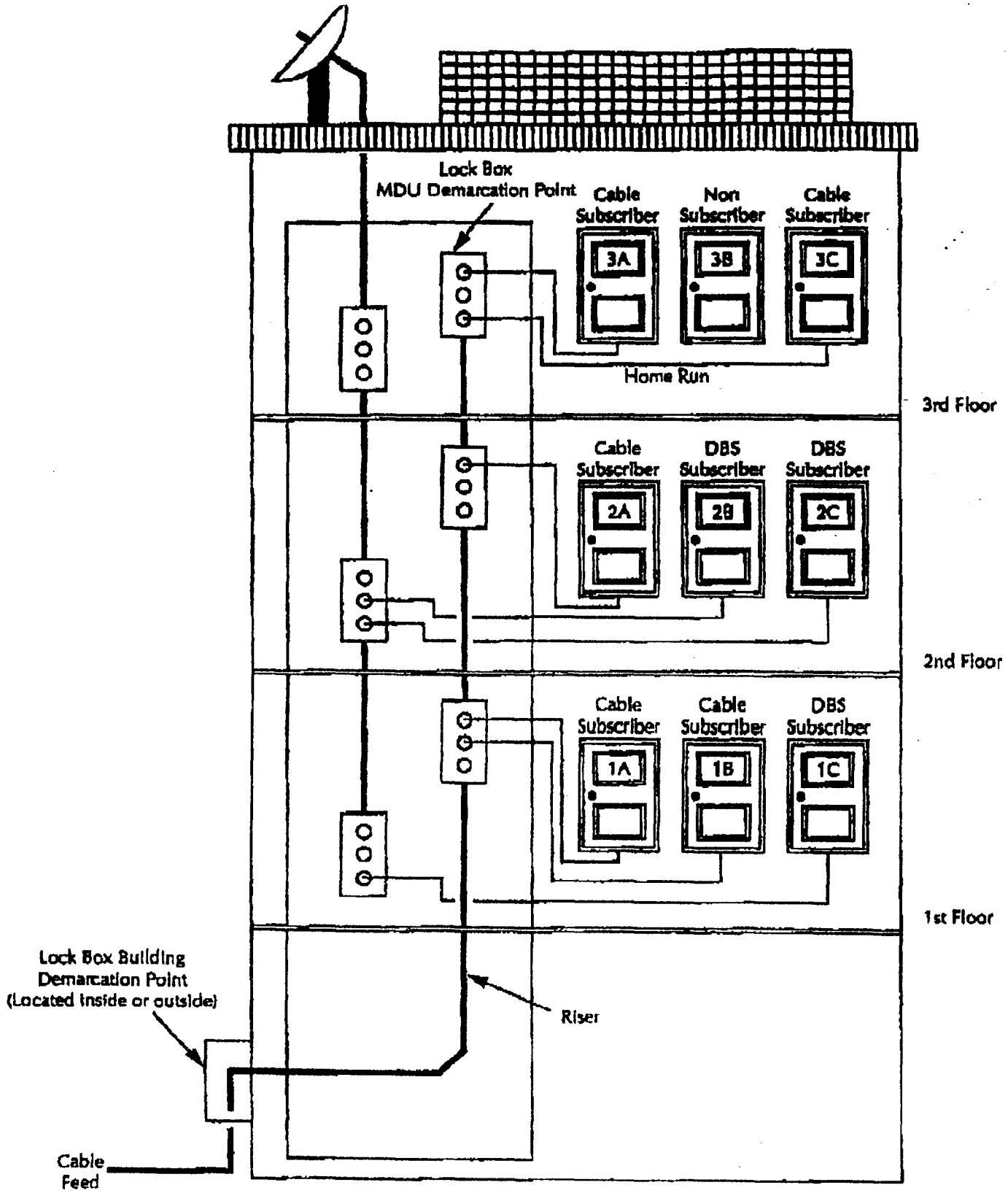

Incumbent or Alternate Service

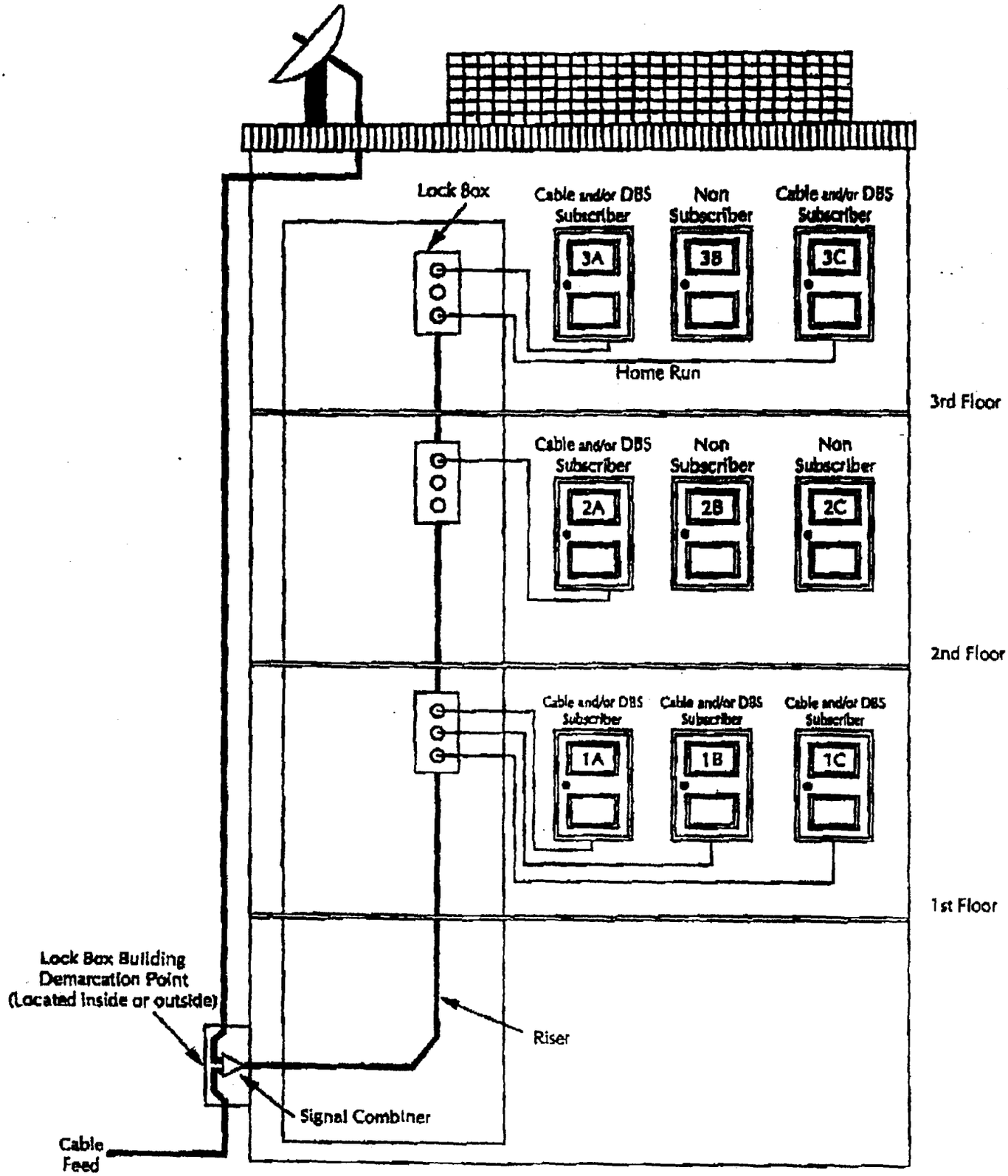

Incumbent and/or Alternate Service
(Preferred Installation)