XI. Average Pole Height Has Increased, While The Amount Of Usable Space Must Be Reduced

NCTA states that while pole height has increased, that it is "inherently self-contradictory" to simultaneously claim that usable space has decreased.[82] The Electric Utilities agree that, at first glance, it is counter-intuitive to encounter the situation where the average height of a pole has increased to 40 feet and yet the amount of usable space available on a pole has decreased. But this is, in fact, the case because the original allocation of space on a pole was based on assumptions that can no longer be said to be true.

More specifically, as discussed in the comments filed by the Electric Utilities in this rulemaking, there are two flaws in the Commission's current formula. First, the current formula fails to take into account that, in order to meet mid-span ground clearance standards, attaching entities must attach their facilities to a pole at 19'8", not 18 feet.[83] Second, the 40 inch safety space must be classified as unusable space.[84] Correcting these errors causes a decrease in the amount of usable space available on a 40-foot pole.

XII. The Average Height Of An Electric Utility Pole Has Increased To 40 Feet

Contrary to the comments of MCI, the Electric Utilities have experienced an increase in pole height.[85] FPL has seen a fairly steady percentage of 40-foot poles added to their

---

82/ Comments of the National Cable Television Association at 9.

83/ Comments of AEP et. al. at Section VIII.C.2.a.

84/ Id. at Section VIII.C.2.a.i; See infra discussion at Section XIII.

85/ Comments of MCI Telecommunications Corporation at 2-5.

service area, with the number of 45-foot poles added increasing over the last ten years.[86] The number of 30 and 35-foot poles added has gone down over the last ten years.[87] The end result of the trends depicted in Attachment 2 is that, as of 1990, the average height of a new pole entering FPL's pole population is over 40 feet.[88] The other electric utilities participating in these reply comments have experienced a similar trend.[89]

In addition, MCI argues that the primary reason for any increase in the average height of utility poles is the result of an increase in the demand for electric services.[90] The Electric Utilities maintain that the reason for the overall increase in the average height of a

---

[86] See Exhibit 2.

[87] Id.

[88] See Exhibit 3.

[89] See also Comments of Public Service Company of New Mexico at 6; Comments of Time Warner Cable at 9. In its comments, NCTA provides information from a study involving electric utilities in Michigan and New York that shows that the average height of a pole for three major electric utilities operating in these states is 40.17 feet. Comments of National Cable Television Association at 10.

[90] Comments of MCI Telecommunications Inc. at 2-5. See also Comments of National Cable Television Association at 10. It should be noted that NCTA bases its statement on the opinion of a witness testifying on behalf of a state cable association. The opinion of one individual given in an unrelated proceeding is not adequate evidence of what motivates an entire industry to place taller poles.

NCTA goes on to say that as the voltage increases on a wire, the wire must be placed a greater distance from the ground. Comments of National Cable Television Association at 10. The Electric Utilities believe this argument is irrelevant because it misstates the facts. Ground clearance for distribution voltage phase to ground from 750 V to 22 kV (the equivalent of over 38 kV phase to phase) does not increase pursuant to NESC Trable 232-1. All distribution system conductor in this range of voltages must have the same level of ground clearance along and across roadways. Therefore, an increase in distribution voltage will not generally require an electric utility to raise its attachment on a pole to meet the clearance requirements set forth in NESC Table 232-1.

pole is not relevant to the decision as to whether the average height of a pole should be changed in the rate formula. It is enough that average pole height has, in fact, increased. However, in order to ensure that the Commission is not persuaded by information that is incorrect, the Electric Utilities wish to address the rationale provided by commenting parties for why electric utilities are deploying taller poles.

When electric utilities design their distribution systems, they do so using plans that take into account such factors as NESC guidelines, future projections for electricity demand, the state of distribution technology and the use of the distribution network by other attaching entities. An electric utility will place poles that allow it to accommodate all foreseeable increased power needs. Thus, while there may be instances where the electric utilities are placing higher voltage lines on their distribution poles, the Electric Utilities are able to generally accommodate these lines within the 7'6" of space allocated to them. To the extent that high voltage lines cause an electric utility to replace a pole, this is usually the result of an error in planning or the occurrence of an unforeseeable event, both of which are rare.[91]

XIII. The 40 Inch Safety Space Should Be Allocated To Unusable Space Or To Communications And Cable Attachers

The 40 inch zone between communications or cable facilities and electric conductors is required solely due to the presence of the telecommunications or cable facilities. When electric utilities occupy poles without any telecommunications or cable facilities, the 40 inch

---

91/ The Electric Utilities also designed their conduit systems with enough space to accommodate future growth in demand for electric service. The original projections on which these utilities constructed their systems, however, may be in jeopardy if the FCC requires the electric utilities to use critical reserve conduit space for telecommunications and cable attachments.

safety space is not required. The instant a telecommunications or cable facility is placed on the electric utility's pole, the 40 inch space must be included on the pole. By this simple statement, it is clear that it is only the presence of a telecommunications or cable company that can cause the electric utility to give up pole space that would otherwise be available for electric conductors.

For example, if an electric utility were to construct a pole infrastructure, there is enough space on a 30 foot pole to accommodate certain electric utility functions.[92] As is clear, there is no 40 inch safety zone in the absence of telecommunications or cable facilities. If the electric utility builds the same distribution infrastructure, but designs the system to allow for cable or telecommunications facilities, the electric utility must immediately add 40 inches of safety space plus one foot of usable space for each attaching entity. Thus, if only one attaching entity will attach to a pole, the electric utility would place a 35-foot pole.[93] When more than one attaching entity seeks space on a pole, the electric utility must increase the height of the pole to 40 feet. This is because poles can only be purchased in 5-foot increments and the addition of a second attaching entity causes the allocation of space to exceed 35 feet. The electric utility usually must also increase the class of the pole placed to accommodate the additional load demands. The difference in cost that the electric utility incurs to accommodate any pole attachments other than electric utility conductors can cause the cost of the pole to as much as double from the cost that the electric utility would otherwise incur if it was only required to install poles for its internal electric needs.

---

[92] See Exhibit 4.

[93] Id.

Finally, NCTA argues that the 40 inch safety space is a by-product of the NESC ground clearance requirement of 22 feet that electric utilities must meet for distribution conductors.[94] This statement is incorrect for two reasons. First, NESC Table 232-1, cited by NCTA, does not support NCTA's claim regarding the required ground clearance levels. Second, the minimum ground clearance for the electric conductor is not necessarily dispositive of this issue because many electric utilities attach a neutral conductor at a lower point on a pole. Indeed, the point of attachment for the neutral has the same ground clearance requirement as the cable attachment.[95] In addition, 40 inches of clearance space must be included between the neutral conductor and a cable or telecommunications facility that would not otherwise be required. The additional 40 inches of space causes the electric utility to have to raise the point of attachment for its distribution conductors to a level that exceeds the ground clearance that would be required if the cable attachment was not present. Accordingly, NCTA's argument that the 40 inch safety space is necessary in order for the distribution conductor to meet the highway clearance standards is fundamentally misplaced.

In light of the above, it is unjust and unreasonable that an electric utility is required to place a pole that is 33% taller and 100% stronger in order to accommodate two attaching entities when the utility is only allowed to recover 15% of the cost of the same pole. Placing the 40 inch safety zone in unusable space or allocating this space between telecommunications and cable attachers will more fairly allocate pole costs to the parties that cause the electric utility to incur such costs.

---

[94] Comments of the National Cable Television Association at 14.

[95] 1997 NESC, Table 232-1.

Time Warner argues also that the 40 inch space should be allocated to the electric utility because the electric utility makes use of the space through the placement of transformers and other equipment in the safety zone.[96] The investor-owned electric utilities subject to § 224 do not normally place transformers in the safety zone. The electric utility conductors and equipment were normally attached to the pole, to provide electricity to customers, before the cable company attached its facilities to the pole. In some instances, cable companies might be allowed to take advantage of an NESC provision that states that the minimum clearance between the bottom of a grounded piece of equipment and a telecommunications or cable facility is 30 inches.[97] However, because the electric utility is usually the first entity on a pole, it is either by choice or error on the part of the cable company to place its facilities less than 30 inches from the bottom of grounded equipment.[98] In this scenario, which represents the typical timing and order of the placement of pole attachments, it is difficult to see how the electric utility "acted" in any way to improperly "place" its equipment in the 40 inch safety zone.

As noted in the Comments filed by the Electric Utilities, the optimal solution is to allocate the 40 inch safety space to unusable space.[99] This approach is supported by

---

96/ Comments of Time Warner Cable at 15.

97/ 1996 NESC, Rule 239.

98/ To the extent that this practice occurs, under the Commission's current approach, the electric utility is subsidizing the cost of the cable attacher's use of the additional 10 inches of space. This presents another reason why the Commission must adopt the Electric Utilities' proposal to classify the 40 inch safety space as unusable or as communications space.

99/ Comments of AEP et. al. at Section VIII.C.2.a.i.

several parties[100] and will ensure that both telephone and electric utilities are able to recover the costs associated with poles that accommodate electric and telecommunications or cable attachments. However, the Electric Utilities would find equally acceptable the suggestion of the Electric Utility Coalition that this space be allocated to telecommunications and cable attachers as used space.[101]

XIV. The National Cable Television Association Mischaracterizes The Modifications Made To The NESC Vertical Clearance Requirements

Contrary to NCTA's statement in footnote 31 of its comments,[102] the NESC did not change the vertical ground clearance required for electric conductors from 18 feet in basic conditions to 15'6" in basic conditions. It simply changed the methodology for doing the clearance calculation.

Prior to 1990, the NESC recommended vertical clearances that were based on what was termed "basic conditions." In other words, 18 feet was the minimum vertical clearance necessary on an average day under normal operating conditions. However, the pre-1990 code also allowed the ground clearance minimum to be increased for conductors that ran over streets, roads, alleys and driveways (which describes most of the terrain where cable television and telecommunications attachments are made to electric utility poles) to account for factors such as wind, ice loading and operating temperatures. Taking these factors into

---

100/ See, e.g., Comments of Public Service Company of New Mexico at 6; SBC Communications Inc. at 35-38; Comments of Sprint Corporation at 3-4.

101/ Comments of the Electric Utilities Coalition at 33.

102/ Comments of National Cable Television Association at 11 & n.31.

account, the minimum clearance under the pre-1990 code was 15'6" under fully loaded conditions, as it is today.

As described in greater detail in Appendix A of the 1990 NESC, the NESC Clearances Subcommittee recognized that the clearance measurements were confusing and subject to misinterpretation. The Subcommittee thus changed the standard for vertical clearance measurement to 15'6" under worst-case conditions. This was not a change in clearance from 18' to 15'6", just a change in how vertical clearance is calculated. Appendix A of the 1990 Code specifically states that "[w]hile some clearance values may appear to be larger and some smaller, the net effective clearances of energized conductors and cables are essentially unchanged."[103]

Regardless of which method of calculation is used, NCTA's argument misses the point regarding vertical clearance. Whether the minimum clearance required from the conductor to grade is 15'6" under worst-case conditions, or 18' under best-case conditions, that does not equate to the height where entities must attach to the pole in order to achieve the required vertical clearances. A cable that spans the distance between two poles is not taut; it has a natural sag, and it is the lowest point of the sag that must meet the clearance requirements. It follows that if the lowest point of a cable is at 15'6" under worst-case conditions, the place where the cable is attached to the pole must be at some point considerably higher than 15'6".

This is exactly the argument put forth by the Electric Utilities. The attachment must be made to the pole at 19'8" in order to meet vertical clearance standards at the lowest point

---

[103] 1990 NESC, Appendix A.

of the span between the two poles on normal days, and 15'6" on worst-case days. The associated argument that an 18-foot minimum clearance equates to an 18-foot attachment height is incorrect and must be disregarded.

XV. Dual Side Attachments And Pole Brackets Can Present Safety And Operational Concerns

AT&T has stated that it is common practice for utilities to allow dual side attachments on poles, therefore, utilities should not be allowed to prevent attaching entities from using this technique in order to add facilities in their allocated one foot of space.[104] The Electric Utilities would like to ensure that the Commission understands that dual side attachments are not allowed by all electric utilities due to limitations presented by engineering, operations, design and safety practices. Some electric utilities do not allow dual side attachments because they interfere with the engineering requirement that a utility maintain enough unencumbered climbing space to ensure safe access to pole attachments by utility and attaching entity personnel.

In addition to the safety concerns, dual side attachments can also make pole replacement more difficult. When attachments are limited to one side of a pole, the utility is able to replace the pole without having to work between cables. In essence, the new pole is placed with all cables on one side and then the cables are attached to the new pole. When dual side attachments are present, the utility must implement additional procedures to allow it to replace the pole with energized conductors between cables. The complications presented

---

[104] Comments of AT&T Corporation at 6 & n.11.

by such an arrangement cause some utilities to follow engineering practices that do not allow dual side attachments. In instances where such attachments are allowed by a utility, the additional complexity related to pole placement can raise the make-ready costs of parties seeking attachment on poles already completely occupied.

Finally, the use of cantilevered pole brackets is not universally accepted. The Electric Utilities generally do not use cantilevered pole brackets except in instances when poles are not in alignment and brackets are necessary to allow a straight line attachment between poles. This practice is currently the norm because the use of cantilevered brackets can cause unequal distribution of weight on a pole, thus exacerbating loading issues. Cantilevered brackets can also limit safe and easy access to pole attachments.

XVI. Grounding Systems Must Be Included In The Electric Utility Ratebase

NCTA claims that electric utilities require cable operators to attach their facilities to the electric company ground, even though a cable company has installed its own grounding.[105] As a result, NCTA goes on to argue that because the grounding provided is not needed by the cable company, the cable company should not be required to pay for the presence of the grounding.[106] NCTA has misstated the reasons why electric utilities must be allowed to include grounding in the ratebase for pole attachments.

The NESC, the Communication Industry Manual for Outside Plant Construction and accepted engineering safety practices dictate that cable companies bond their facilities on

---

[105] Comments of National Cable Television Association at 19.

[106] Id.

poles. This is because cable and telecommunications facilities are conductors. Not all electric utilities mandate that attaching entities bond to electric utility bond wires. However, they do install and provide access to bond wire for that purpose in order to ensure compliance with all engineering and safety guidelines. If a cable company is able to fulfill its own business requirements by relying on the utility's grounding system, the electric utility should be allowed to charge for this service.

The Commission is incorrect in its statement that the costs of grounds are already included in the net cost of a bare pole.[107] The Commission has properly noted that such costs should be included, however, they are going uncollected by the Electric Utilities.

The Electric Utilities would rather have the cost of the grounding system included in the formula. However, should the Commission reject this recommendation, then it must stipulate that the electric utilities may charge for such attachments outside of the pole attachment rate formula. This alternative is appropriate because attachments to grounding would not be a pole attachment as defined in the Pole Attachments Act.

XVII. Adoption Of A Conduit System Formula Applicable To Electric Utilities Comprised Of Anything Other Than A Whole-Duct Methodology Will Lead To An Unjust And Unreasonable Conduit Attachment Rate

As discussed in the Comments filed by the Electric Utilities,[108] electric conductors are not compatible with communications facilities. Conductor size and safety and service concerns preclude the sharing of space with communications facilities. A half-, quarter-, or

---

[107] NPRM ¶ 18 and n.55.

[108] Comments of AEP et. al. at IX.B.3.

third-duct methodology is not appropriate for electric conduit systems. Once communications facilities are placed in a duct, the duct cannot be utilized for electric purposes.

A clear distinction must be made between telephone conduit systems and electric conduit systems. It is accepted that telephone conduit may be divided into innerducts. Therefore, something other than a whole-duct methodology may be appropriately applied to telephone conduit systems.[109] As a matter of NESC and sound engineering practices, however, telecommunications facilities and electric conductor cannot exist in the same duct. Once a duct in an electric conduit system is divided into innerducts or is used to carry telecommunications cable, the duct can no longer be used for electric purposes. The effect of subdividing an electric conduit system duct is to render it useless to the electric utility.

Given the above, applying something other than a whole-duct methodology to electric conduit systems is unreasonable. It would be unfair to the electric utilities and would prevent them from being fully compensated for the effective loss of a complete duct. For these reasons, once an electric conduit system duct contains even one communications cable, regardless of whether the duct is split into innerducts, the duct becomes completely used. As a result, the Commission cannot apply a half-duct methodology to attachments in electric utility conduit systems.

XVIII. Wireless Facilities Are Not Pole Attachments

At least one commenter, AT&T, argued that the Commission should use this proceeding to expand the definition of pole attachments to include the attachment of wireless

---

[109] Comments of SBC Communications Inc. at 27-29.

facilities to utility poles, ducts, conduit or right-of-way.[110] AT&T's proposal contradicts the plain language of § 224, the legislative history of § 224 and sound policy considerations. The language of the Pole Attachments Act and its legislative history unambiguously refer to wires on distribution facilities. Based on sound statutory analysis, the Commission is limited to regulating wire attachments to utility poles and conduit. In addition, as such, applying the Pole Attachments Act to wireless facilities makes no sense from a policy perspective in light of the myriad of potential antenna sites available to wireless providers.

A. The Historical Context And Legislative History Of The Pole Attachments Act, As Amended, Demonstrates That Congress Intended To Regulate Only The Attachment Of Wire Facilities

In 1978, Congress passed the Pole Attachments Act to protect cable television companies from alleged anticompetitive activities by telephone utilities, who, Congress believed, were exercising monopoly power over their "bottleneck" distribution infrastructure by charging excessive pole attachment rates.[111] The Senate Report accompanying the legislation explained that "owing to a variety of factors, including environmental or zoning restrictions and the costs of erecting separate CATV poles or entrenching CATV cables underground, there is often no practical alternative to a CATV system operator except to utilize available space on existing [utility] poles."[112]

110/ Comments of AT&T Corporation at 9-10.

111/ The history of the Pole Attachments Act is discussed in detail in the Electric Utilities' comments. See Comments of AEP et al. ¶¶ 47-48; see also Texas Utilities Elec. Co. v. FCC, 997 F.2d 925 (D.C. Cir. 1993).

112/ Texas Utilities Elec. Co. v. FCC, 997 F.2d at 932 (quoting S. Rep. No. 580, 95th Cong., 2d Sess. at 15, reprinted in 1978 U.S.C.C.A.N. 109, 123).

The statute enacted by Congress in 1978 clearly was intended to apply only to attachments of wire facilities. This reading of the 1978 statute has been universally accepted — by the utilities, by the telephone companies, by wireless providers, and by the Commission — and was not challenged by any party during the two decades of its operation.

The legislative changes to the Pole Attachments Act that eventually became § 703 of the Telecommunications Act of 1996 were developed against the background of expansion of the cable industry into the provision of telecommunications services.[113] In the absence of new legislation, the cable companies' competitors, principally competitive access providers ("CAPs"), would not be entitled to the same type of § 224 coverage for attachments of their fiber optic cable to utility infrastructure as cable companies. Congress, therefore, extended

---

113/ Proposed changes to the Pole Attachments Act were first introduced in the House and Senate telecommunications bills that were considered in 1993-94. H.R. 3636 (Introduced on November 11, 1993 and passed by the House of Representatives on June 28, 1994) and S. 1822 (Introduced on February 3, 1994, reported out of the Senate Committee on Commerce, Science, and Transportation on September 14, 1994, but never passed by the full Senate) both add the phrase "or [a] provider of telecommunications service" to the definition of "pole attachment," 47 U.S.C. § 224(a)(4). As amended, the definition of "pole attachment" from the 1994 Senate bill, S. 1822 (which is identical to the final version passed in 1996) reads as follows: The term "pole attachment" means any attachment by a cable television system or provider of telecommunications service to a pole, duct, conduit, or right-of-way owned or controlled by a utility. S. Rpt. No. 103-367, 103d Cong., 2d Sess. at 134. The 1994 Senate Report accompanying the legislation explains that the changes to the Pole Attachments Act, including the establishment of a new rate formula for attachments used to provide telecommunications services, are "intended to remedy the anomaly of current law, under which cable systems providing telecommunications services are able to obtain a regulated pole attachment rate under Section 224 of the 1934 Act, while other providers of telecommunications services are unable to obtain a regulated pole attachment rate under Section 224." Id. at 65. The same thought is contained in the Conference Report on the final version of the 1996 Act, which notes that the House amendment "is intended to remedy the inequity of charges for pole attachments among providers of telecommunications services." Conf. Rpt. No. 104-458, 104th Cong., 2d Sess. at 206.

cable pole attachment rights to telecommunications providers to create a level playing field for attachments for wireline telecommunications services.

It defies common sense to argue that Congress intended to extend the definition of the term "pole attachments" to include wireless antennas. Wireline service providers need contiguous facilities (including rights-of-way) for the siting of their cables and, as such, benefit from the configuration of the electric utilities' distribution infrastructure. On the other hand, wireless providers do not need contiguous facilities for the siting of their antennas. Utility infrastructure is only one of a myriad of alternatives available to wireless providers. Wireless equipment can be mounted on any tall building or structure, such as water towers, standard communications towers, monopoles, billboards, highway light structures or church steeples. Wireless providers thus have a multitude of options, other than utility infrastructure, on which to locate their equipment.[114] Indeed, utility distribution poles are not typically high enough to be an optimal choice for the placement of most wireless equipment. Accordingly, the underlying purpose of the Pole Attachments Act — to provide access to contiguous distribution infrastructure — simply does not come into play in the case of siting locations for wireless service providers.[115]

114/ In addition, wireless facilities are much less "dense" than wireline facilities. Wireline facilities typically are deployed with approximately 25 attachments per mile. Wireless facilities, on the other hand, typically require only one attachment per 1-5 mile radius, depending upon the terrain. Moreover, wireline facilities must be located at the point of delivery of service to each house, which brings utility distribution facilities into play, whereas such location is not required in the case of wireless service.

115/ Only wireline telecommunications service providers would be disadvantaged vis-a-vis cable companies that are providing telecommunications service. Wireline telecommunications service providers are the only entities that arguably have a need

B. The Language And Structure Of The Statute Limits Its Application To Wireline Attachments

The view that Congress intended the Pole Attachments Act to be limited to wireline attachments is supported by an examination of both the language and structure of the statute, as amended by the 1996 Act.

First, there is not a single mention of wireless telecommunications anywhere in any version of the Pole Attachment Act amendments, either as the legislation was introduced in 1993-94 or as later introduced and passed in 1995-96.[116] However, Congress did deal with the placement of wireless equipment in the 1996 Act, in § 704, immediately following the pole attachment amendments in § 703. Where Congress dealt with wireless providers, the statute clearly identified its subject matter as wireless telecommunications service.[117]

---

to attach their fiber optic cable to the same poles, ducts, conduit and rights-of-way as the cable companies. Wireless companies, by contrast, either do not have to attach their equipment to utility infrastructure at all (selecting tall buildings or other tall structures instead), or only require attachment to a limited number of selected poles. As such, a wireless company would not be significantly disadvantaged by having to pay a market rate for the poles it would need to use. The fact that a cable company was entitled to a regulated rate simply would not create a substantial "inequity" vis-a-vis a wireless competitor.

116/ Neither the House or Senate versions introduced in 1993-94 (H.R. 3636 and S. 1822), nor the House or Senate versions introduced in 1995-96 (H.R. 1555 and S. 652), contain any reference to wireless telecommunications or the attachment of wireless equipment. The House and Senate reports accompanying each of these bills, as well as the Conference Report on the final legislation, do not mention wireless telecommunications or wireless equipment in connection with pole attachments. Wireless providers simply were not on Congress' mind when it was dealing with pole attachments.

117/ Section 704 deals with "Facilities Siting" for wireless telecommunications service. Section 704(a) is entitled "National Wireless Telecommunications Siting Policy." It addresses local zoning authority to regulate the placement, construction and modification of personal wireless service facilities. Section 704(c) establishes a national policy of making Federal government "property, rights-of-way, and

The proposition that Congress had in mind wireline services, not wireless services, in the pole attachment amendments is further supported by the jurisdictional grant to the Commission contained in the statutory definition of "utility."[118] Congress established that the FCC's jurisdiction is only triggered where a communications space for wire communications has been established on the utility infrastructure:

> Federal involvement in pole attachments matters will occur only where space on a utility pole has been designated and is actually being used for communications services by wire or cable.[119]

The Senate Report explains that "if provision has been made for the attachment of wire communications, a communications nexus is established sufficient to justify, in a

---

easements" available on a "fair, reasonable, and nondiscriminatory basis" for the placement of wireless telecommunications equipment. Interestingly, § 704 does not direct the FCC to impose a regulated rate for placement of wireless equipment on federal property. (This raises the related question of why Congress would single out only one class of potential antenna site owners (utilities) on which to impose rate regulation). Thus, when Congress intended to address wireless matters it was capable of doing so explicitly. And it did so in § 704, not in the pole attachment amendments in § 703.

118/ This grant of jurisdiction, originally made in the 1978 Act, was necessary because the FCC had concluded in 1977 that it had no jurisdiction to regulate pole attachment rental agreements between CATV systems and utilities. California Water & Tel. Co., 64 F.C.C. 2d 753 (1977); see H.R. Rep. No. 721, 95th Cong., 1st Sess. Part 2 at 6 (1977); S. Rep. No. 95-580 at 14, reprinted in 1978 U.S.C.C.A.N. at 122. The 1978 legislation was specifically intended to grant the FCC jurisdiction to regulate such agreements. S. Rep. No. 95-580 at 1, reprinted in 1978 U.S.C.C.A.N. at 109 (purpose of bill is "[t]o establish jurisdiction within the Federal Communications Commission (FCC) to regulate the provision by utilities to cable television systems of space on utility poles, ducts, conduits or other rights-of-way owned or controlled by those utilities").

119/ S. Rep. No. 95-580 at 15 (emphasis added).

jurisdictional sense, the intervention of the Commission."[120] Thus, the Commission's jurisdiction exists only where a utility has established a "communications space" for wire communications on its poles.[121]

The jurisdictional grant reflected in the definition of "utility" was unchanged by the 1996 Act.[122] Thus, while Congress expanded the universe of persons entitled to attach to utility poles to include telecommunications carriers, it did not change Congress' intent that the Commission's jurisdiction be "strictly circumscribed" to arrangements affecting the wireline "communications space" on the poles. The logical extension of this jurisdictional grant is that the entire regulatory scheme is limited to "wire communications."

Moreover, examination of the existing rate formula is instructive in determining what Congress had in mind with respect to pole attachments for telecommunications carriers.[123]

---

[120] Id. (emphasis added). The Senate Report admonishes that the "expansion of FCC regulatory authority is strictly circumscribed and extends only so far as is necessary to permit the Commission to involve itself in arrangements affecting the provision of utility pole communications space to CATV systems." Id. (emphasis added).

[121] "As a technical matter, the cables are lashed to an aerial support strand, which in turn is affixed to a single point within the section of the pole designated as 'communications space.'" Texas Utilities Elec. Co. v. FCC, supra, 997 F.2d at 927.

[122] The 1996 Act defines "utility" as follows:

> The term "utility" means any person who is a local exchange carrier or an electric, gas, water, steam, or other public utility, and who owns or controls poles, ducts, conduits, or rights-of-way used, in whole or in part, for any wire communications.

[123] A further indication that Congress intended § 224 to be limited to wire facilities is reflected in the regulatory rate formula underlying this proceeding. The amended statute establishes two separate rate formulas to be applied to pole attachments. The current cable television rate formula is to be applied to pole attachments used by cable companies solely to provide cable service. A new rate formula, which will become effective in 2001, will be established for pole attachments by

Section 224(d)(1) provides that a utility is entitled to recover certain costs, up to a maximum of actual costs associated with a percentage of the "total usable space" on the utility's poles. The term "usable space" is defined in § 224(d)(2) as "the space above the minimum grade level which can be used for the attachment of wires, cables and associated equipment" (emphasis added). This definition is unchanged from the 1978 Act, which, as discussed above, unquestionably is limited to wireline services. The 1996 amendments apply this definition of usable space — wires, cables and associated equipment — to the rate formula for pole attachments by telecommunications carriers. For the rate formula of § 224(d) to have any meaning, therefore, the pole attachment must be a wire facility. There can be no plainer evidence of Congressional intent that pole attachments for telecommunications carriers are limited to wireline facilities.

AT&T relies on the language of the "pole attachments" definition, 47 U.S.C. § 224(a)(4), to make its argument that wireless attachments should be included under the Pole Attachments Act.[124] As amended by the 1996 Act, the pole attachments definition

---

telecommunications carriers, absent successful negotiation between the parties. Until the post-2001 rate provisions become effective, attachments by new telecommunications carriers without existing agreements will be governed by § 224(d). The language of the 1996 Act establishing interim application of the existing rate formula to telecommunications carriers is as follows:

> Until the effective date of the regulations required under subsection (e), this subsection shall also apply to the rate for any pole attachment used by a cable system or any telecommunications carrier (to the extent such carrier is not a party to a pole attachment agreement) to provide any telecommunications service.

47 U.S.C. § 224(d)(3) (emphasis added).

[124] See Comments of AT&T Corporation at 9 n.17.

includes "any attachment by a ... provider of telecommunications service."[125] Any attachment, the argument goes, means any attachment, and must, therefore, include attachments of wireless equipment.

This argument simply fails to account for other aspects of the statutory language, its legislative history, and the purpose of the 1996 Act. First, it is significant that the phrase "any attachment" was part of the pole attachments definition as originally enacted in 1978. No one could plausibly argue that the "any attachment" language authorized the attachment of wireless equipment under the 1978 Act. Second, as set out above, the jurisdiction of the FCC, articulated in the definition of "utility," remains unchanged by the 1996 Act and is defined in terms of wire communications. The Commission's jurisdiction thus continues to be "strictly circumscribed" to regulating arrangements governing attachments to utility pole wireline "communications space."[126] Third, the rate formula applicable to providers of telecommunications service under § 224(d) is articulated in terms of "usable space," which, as noted above, is defined as "the space above the minimum grade level which can be used for the attachment of wires, cables and associated equipment."[127] Reading "any attachment" to include wireless equipment would render the entire rate formula scheme set out in § 224(d) meaningless. Accordingly, reading "any attachment" to include wireless

---

[125] Telecommunications service is elsewhere defined to mean "the offering of telecommunications for a fee directly to the public, or to such classes of users as to be effectively available directly to the public, regardless of the facilities used." 47 U.S.C. § 153(46). This would include wireless providers.

[126] S. Rep. No. 580 at 15.

[127] 47 U.S.C. § 224(d)(2).

equipment would do violence to the language of the statute, its legislative history, and its underlying purpose.

C. Limitation Of Regulated Pole Attachments To Wireline Services Is Supported By Important Policy Considerations

1. FCC-Mandated "Rent Control" Of Certain Antenna Sites Is Not The Best Way To Achieve Rapid Rollout Of New Wireless Services

Sound policy reasons support the limitation of regulated pole attachments to wireline facilities. Until recently, no one, including wireless providers, read the Pole Attachments Act as covering wireless equipment, since it was clear and universally understood that the Act was limited to wire and cable attachments. Without any government intervention, electric utilities and wireless companies have been freely entering into site leasing arrangements. For example, many utilities already have master site lease agreements with PCS companies. These arrangements typically include a variety of utility-owned properties — office building rooftops, communications towers, substations and other real estate assets not included in the Pole Attachments Act. These market arrangements, freely entered into, are mutually beneficial to both parties. Furthermore, it is in an electric utility's best interest to continue to make productive use of all of its assets — including assets useful for antenna siting. Accordingly, these arrangements should continue to flourish. Any FCC-mandated rate regulation of a portion of the electric utility assets useful for antenna siting is more likely to disrupt than foster creative business arrangements between electric utilities and wireless companies. If the market is allowed to continue to work the way it has thus far, the result will be <u>more</u> siting availability for wireless carriers.

2. Extending § 224 To Wireless Equipment Would Have The Market-Distorting Effect Of Creating An Unlevel Playing Field Between Incumbent Wireless Providers And New Entrants

As a result of the universal understanding that the Pole Attachments Act does not cover wireless equipment, all of the substantial build-out of wireless services (cellular, SMR, paging, PCS) that has been accomplished to date has been undertaken without FCC-mandated rates for attachments to utility poles. If the Commission were now to expand the Pole Attachments Act to cover wireless equipment, this would bestow upon new entrants in the wireless field an economic advantage not enjoyed by incumbent wireless carriers that have already built out their systems. Such action would create an unlevel playing field between incumbent wireless providers and new entrants, presumably an undesirable result from a policy perspective.[128]

CONCLUSION

The Electric Utilities suggest that the recommendations presented in these reply comments are consistent with the overall deregulation and pro-competition themes of the 1996 Act.

---

[128] A corollary of this negative policy result would be that landlords for wireless equipment sites would be treated unequally in the event § 224 were extended to wireless equipment. Owners (including federal, state and local governments) of non-utility sites — buildings, towers, billboards, etc. — would be entitled to charge a market rate, while only utilities would be subject to an FCC-imposed rate. In effect, utilities would be the only landlords subject to a form of rent control, while every other site owner would be entitled to obtain a market rate. And the disparity is non-trivial: market rates for wireless equipment sites typically run in the range of $1000 to $2000 per month, while regulated pole attachments typically are $6 to $10 per year. There is no conceivable policy justification for such disparate treatment.

WHEREFORE, THE PREMISES CONSIDERED, the Electric Utilities respectfully request that the Commission act upon the pole attachment rate formula issues raised in this rulemaking in a manner consistent with the views expressed herein.

Respectfully submitted,

AMERICAN ELECTRIC POWER SERVICE CORPORATION
COMMONWEALTH EDISON COMPANY
DUKE POWER COMPANY
FLORIDA POWER AND LIGHT COMPANY
NORTHERN STATES POWER COMPANY

By: _____

Shirley S. Fujimoto
Christine M. Gill
Thomas J. Navin
Catherine M. Krupka

Their Attorneys
McDERMOTT, WILL & EMERY
1850 K Street N.W., Suite 500
Washington, D.C. 20006
(202)887-8000

August 11, 1997

Exhibit 1

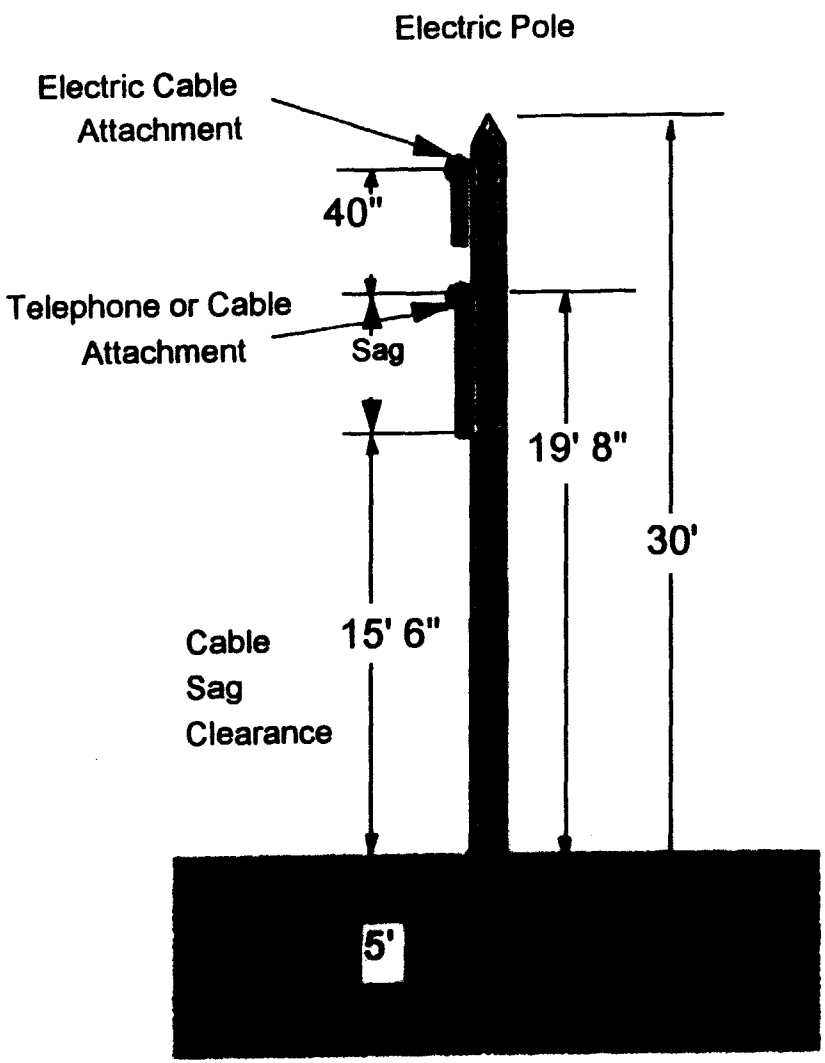

Electric uses one foot of space. Two feet of usable space available.

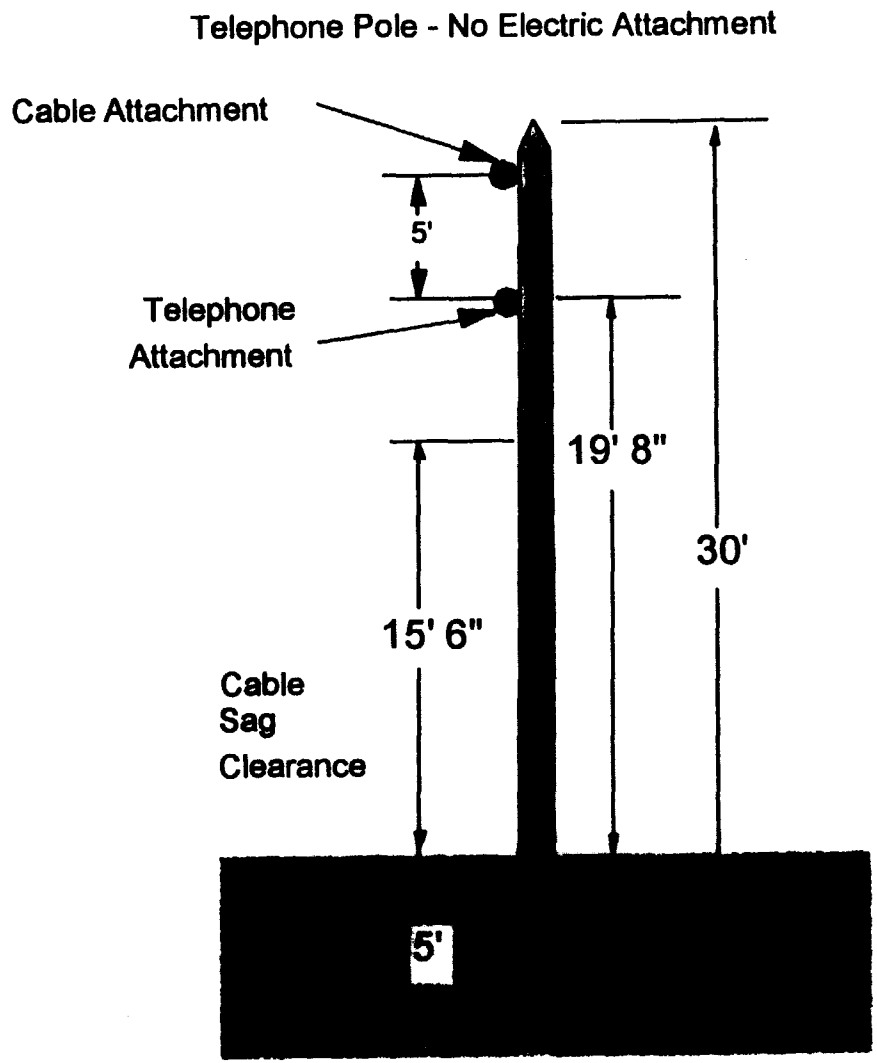

Approximately five to six feet of usable space.

Exhibit 2

10 Year Trend of Pole Additions

% of Total Additions

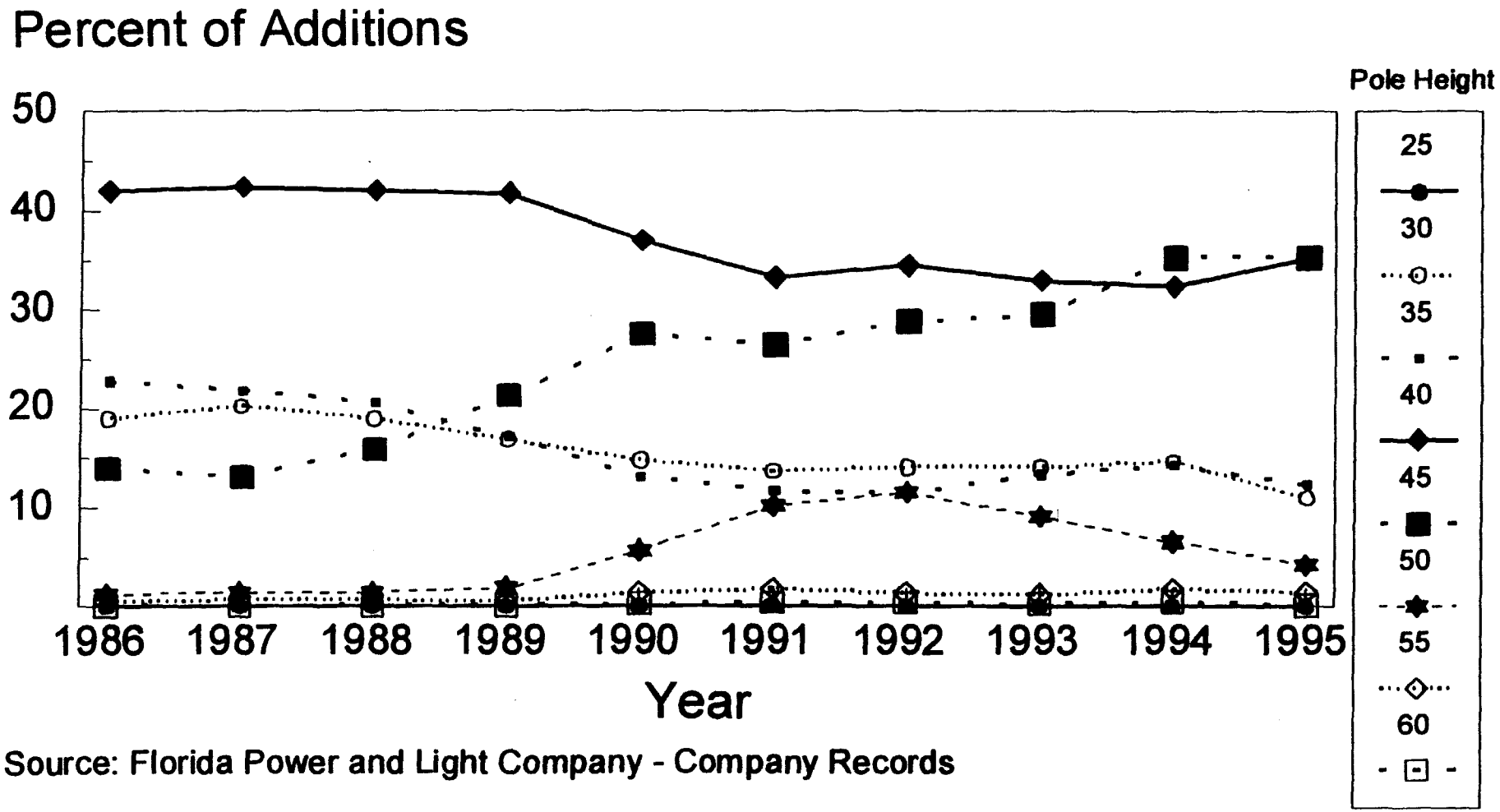

Source: Florida Power and Light Company - Company Records