Exhibit 3

Ten Year Trend of Pole Additions
Average Pole Height
Average Pole Height (Feet)

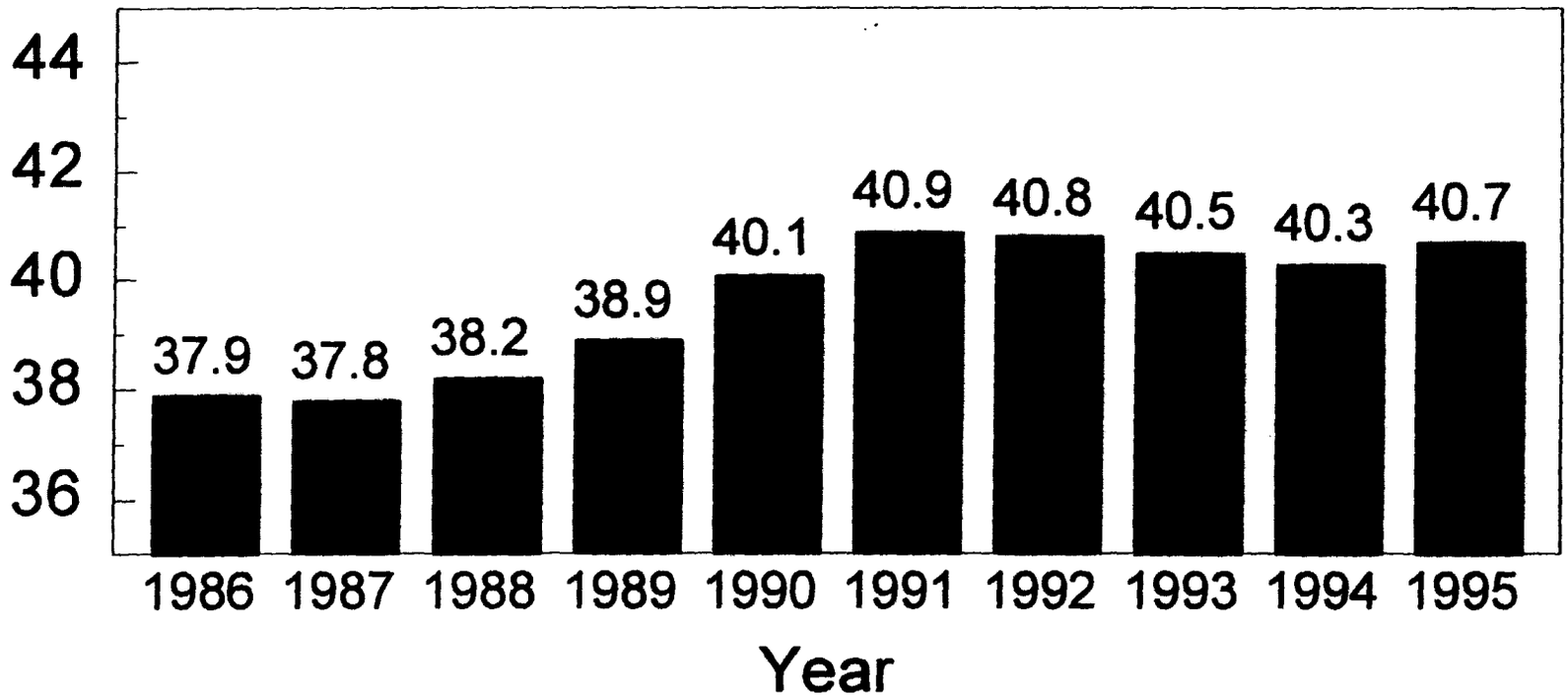

Source: Florida Power and Light Company - Company Records

Exhibit 4

Electric Pole - No Other Attachments

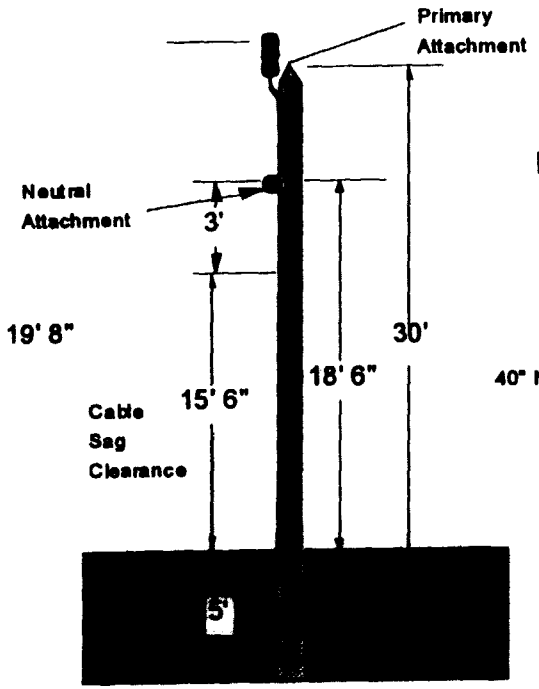

30' Pole Required

Electric Pole - One CATV Attachment

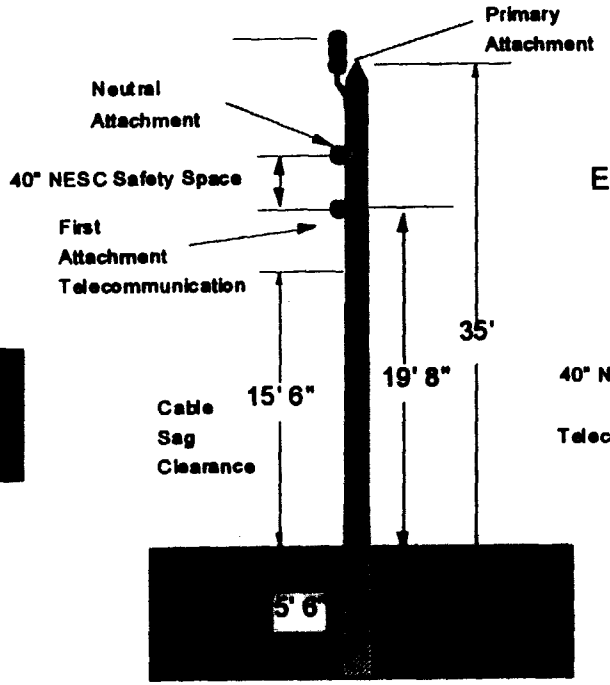

35' Pole Required

Electric Pole - Two Attachments

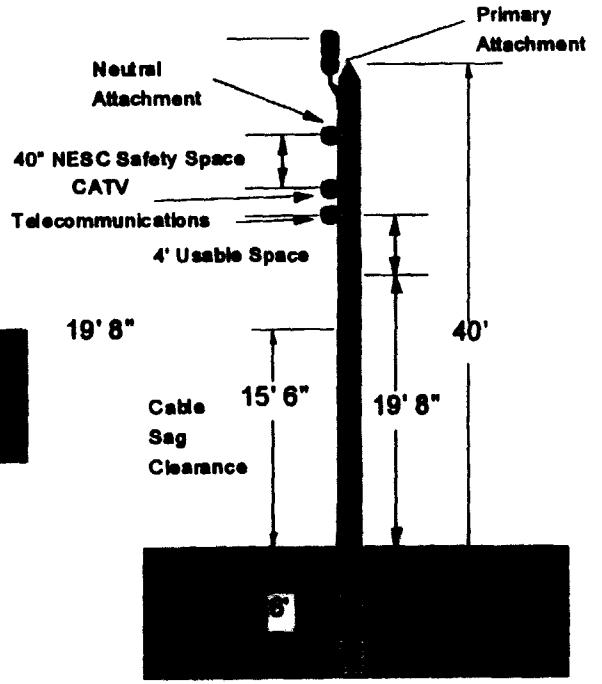

40' Pole Required

CERTIFICATE OF SERVICE

I hereby certify that on this 11th day of August, 1997, I caused true and correct copies of the COMMENTS OF AMERICAN ELECTRIC POWER CORPORATION, ET. AL. to be served via hand delivery on:

William F. Caton (Original and 4 Copies)
Acting Secretary
Federal Communications Commission
1919 M Street, N.W.
Room 222
Washington, DC 20554

Chairman Reed E. Hundt
Federal Communications Commission
1919 M Street, N.W.
Room 814
Washington, DC 20554

Commissioner James H. Quello
Federal Communications Commission
1919 M Street, N.W.
Room 802
Washington, DC 20554

Commissioner Rachelle B. Chong
Federal Communications Commission
1919 M Street, N.W.
Room 844
Washington, DC 20554

Commissioner Susan Ness
Federal Communications Commission
1919 M Street, N.W.
Room 832
Washington, DC 20554

Meredith J. Jones
Chief, Cable Services Bureau
Federal Communications Commission
2033 M Street, N.W.
Room 918
Washington, DC 20554

Margaret Egler
Acting Chief
Financial Analysis and Compliance Division
Cable Services Bureau
Federal Communications Commission
2033 M Street, N.W.
Room 805E
Washington, DC 20554

Catherine M. Krupka

Catherine M. Krupka

RECEIVED

SEP 30 1996

FEDERAL COMMUNICATIONS COMMISSION
OFFICE OF SECRETARY

BEFORE THE

Federal Communications Commission

WASHINGTON, D.C. 20554

In the Matter of	)	
	)	
Implementation of the Local Competition Provisions in the Telecommunications Act of 1996	)	CC Docket No. 96-98

To: The Commission

PETITION FOR RECONSIDERATION AND/OR CLARIFICATION OF THE FIRST REPORT AND ORDER

ON BEHALF OF

AMERICAN ELECTRIC POWER SERVICE CORPORATION, COMMONWEALTH EDISON COMPANY, DUKE POWER COMPANY, ENTERGY SERVICES, INC., NORTHERN STATES POWER COMPANY, THE SOUTHERN COMPANY AND WISCONSIN ELECTRIC POWER COMPANY

Shirley S. Fujimoto
Christine M. Gill
Kris Anne Monteith

McDermott, Will & Emery
1850 K Street, N.W.
Suite 500
Washington, D.C. 20006
(202) 887-8000

Their Attorneys

Dated: September 30, 1996

TABLE OF CONTENTS

Page

EXECUTIVE SUMMARY iii

INTRODUCTION 2

ARGUMENT 7

I. Applicable Legal Standards 7

II. Reconsideration Is Mandated Because the Commission Exceeded Its Statutory Authority 8

A. The Commission Exceeded Its Statutory Authority in Requiring that Utilities Expand 8

B. The Commission Exceeded Its Statutory Authority by Requiring a Utility to Allow the Use of Its Reserve Space Until It Has an Actual Need for the Space 11

C. The FCC Has No Authority to Require Electric Utilities to Exercise Their Powers of Eminent Domain to Expand Capacity 14

III. Reconsideration Is Mandated Because the Commission's Decision Is Arbitrary and Capricious 21

A. The FCC's Requirement that Utilities Provide Access to Infrastructure Within Forty-Five Days Is Arbitrary and Capricious Because the Agency Failed to Provide Notice of Agency Action 21

B. The Conclusion that Any Type of Equipment Can Be Placed on a Utility's Infrastructure Is Arbitrary and Capricious 26

C. The Commission's Determination that a Utility May Not Restrict Who Will Work in Proximity to Its Electric Lines Is Arbitrary and Capricious and Reflects a Failure to Comprehend Fully the Danger Associated With Such Work 29

D. The Commission Improperly Incorporated Section 224(i) into Its Section 224(h) Analysis on Cost-Sharing Issues 32

IV. The FCC's Interpretation Is Impermissible Because It Violates Congressional Intent 34

A. The Requirement for Uniform Application of the Rates, Terms and Conditions of Access Is Contrary to Law Because It Fails to Give Effect to the Statutory Requirement of Voluntary Negotiations . . . 34

B. The FCC's Finding that the Pole Attachments Act Applies to Transmission Facilities Is Contrary to the Plain Meaning of the Statute and the Congressional Intent 37

C. The FCC Violated the Plain Language of the Pole Attachments Act to the Extent It Concluded that the Use of any Single Piece of Infrastructure for Wire Communications Triggers Access to All Other Infrastructure 40

V. Clarifications Are Warranted Because the Commission's Intent Is Ambiguous 45

A. The FCC Should Clarify that Only Reasonable Efforts to Provide Sixty Days Advance Notice of Non-Routine or Non-Emergency Modifications Are Required 45

B. The FCC Should Clarify the Procedures for Resolution of Complaints 48

CONCLUSION 50

EXECUTIVE SUMMARY

In its First Report and Order the Commission found that Section 224 of the Communications Act of 1934, as amended by the Telecommunications Act of 1996, mandates access to utilities' poles, ducts, conduits and rights-of-way on a nondiscriminatory basis and established five "rules of general applicability" and several "guidelines" regulating that nondiscriminatory access. The Commission also promulgated rules to implement the newly enacted written notification provision of Section 224.

The Infrastructure Owners, a group of electric utilities with infrastructure networks constructed and maintained for the purpose of providing electric service, take exception to a number of the Commission's "rules" and "guidelines" and seek reconsideration of them. The defects in the Commission's findings fall into three broad categories.

First, the Commission exceeded its statutory authority under Section 224 in several respects. The Commission went well beyond the scope of the statute in requiring utilities to expand the capacity of their existing infrastructure to accommodate new requests for access by telecommunications carriers or cable operators; indeed, its decision ignores one of the four express bases on which access to infrastructure may be denied. In addition, the Commission's finding that utilities must permit the use of reserve electric space until an actual need develops goes beyond the Commission's province, ignores the realities of electric operations, and threatens the public interest. Finally,

the Commission has impermissibly intruded -- without a statutory basis therefor -- in matters of state jurisdiction in finding that utilities should use eminent domain authority granted under state law to expand their rights-of-way for the benefit of non-electric third parties.

Second, some portions of the Commission's decision are arbitrary and capricious. The Commission adopted a 45-day response requirement without ever noticing the issue and without any mention of it in the Commission's decision. Similarly, the modification costs issue was not noticed. Several other aspects of the Commission's decision are arbitrary and capricious because record support for them is lacking.

Third and finally, the Commission's decision embraces a construction of Section 224 that impermissibly violates Congressional intent in several respects. The requirement that rates, terms and conditions of access be uniformly applied effectively emasculates the Congressional intent -- illustrated both in the express language of the statute and in its legislative history -- in favor of negotiated access agreements. The agency's finding including transmission facilities in the scope of Section 224 and allowing for the placement of equipment other than coaxial or fiber cable on or in utilities' infrastructure also contradicts the express language of the statute and, therefore, Congressional intent.

In addition to those aspects of the First Report and Order on which they seek reconsideration, the Infrastructure Owners

also seek clarification of two ambiguous aspects of the Commission's decision. Specifically, the Commission should clarify that the 60 day written notice period will not apply in instances (of a non-emergency or non-routine nature) where the utility itself does not have the discretion to delay 60 days before undertaking the modification or alteration -- because it is either subject to a state or local requirement or because the public interest dictates that the modification be performed more quickly. The Commission also should clarify that it intends to permit a respondent to an access dispute to file a response to a complaint, and that the Commission will consider that response, before the Commission acts upon the complaint.

In sum, the Infrastructure Owners support the Commission's efforts to implement rules and regulations that further the de-regulatory and pro-competitive policies of the Telecommunications Act of 1996. The Infrastructure Owners' requests for reconsideration and clarification are consistent with those policies and should be adopted by the Commission.

BEFORE THE

Federal Communications Commission

WASHINGTON, D.C. 20554

In the Matter of	)	
	)	
Implementation of the Local Competition Provisions in the Telecommunications Act of 1996	)))	CC Docket No. 96-98

To: The Commission

PETITION FOR RECONSIDERATION AND/OR CLARIFICATION OF THE FIRST REPORT AND ORDER

ON BEHALF OF

AMERICAN ELECTRIC POWER SERVICE CORPORATION, COMMONWEALTH EDISON COMPANY, DUKE POWER COMPANY, ENTERGY SERVICES, INC., NORTHERN STATES POWER COMPANY, THE SOUTHERN COMPANY AND WISCONSIN ELECTRIC POWER COMPANY

American Electric Power Service Corporation, Commonwealth Edison Company, Duke Power Company, Entergy Services, Inc., Northern States Power Company, The Southern Company, and Wisconsin Electric Power Company (collectively referred to as the "Infrastructure Owners"), through their undersigned counsel and pursuant to Section 1.429 of the rules and regulations of the Federal Communications Commission ("FCC" or "Commission") submit this Petition for Reconsideration and/or Clarification of the First Report and Order, CC Docket No. 96-98, released August 8,

1996 (hereinafter "First R&O"), in the above-captioned proceeding.[1]

INTRODUCTION

1. The Infrastructure Owners are investor-owned electric or power utilities (or parents, subsidiaries or affiliates of electric or power utilities) engaged in the generation, transmission, distribution, and sale of electric energy.[2] The Infrastructure Owners own electric energy distribution systems that include millions of distribution poles and thousands of miles of conduits, ducts and rights-of-way, all of which are used to provide electric power service to millions of residential and business customers. To the extent those facilities are used for communications and the state in question has not preempted the FCC's jurisdiction, the Infrastructure Owners are subject to regulation by the Commission under the federal Pole Attachments Act, 47 U.S.C. § 224, as amended.[3] The Infrastructure Owners have a vital interest in, and are directly affected by, those

---

[1] First R&O, In the Matter of Implementation of the Local Competition Provisions in the Telecommunications Act of 1996, CC Docket No. 96-98, released August 8, 1996, 61 Fed. Reg. 45,476 (Aug. 29, 1996).

[2] A general description of each of the Infrastructure Owners is attached hereto as Appendix I.

[3] Some of the Infrastructure Owners provide energy service in states that have preempted the Commission's jurisdiction under Section 224 by making the certification required by 47 U.S.C. § 224(c)(2), and are therefore subject to state regulation of pole attachments. Nonetheless, because the federal statute serves as the loose "benchmark" on pole attachment and related issues, all of the Infrastructure Owners have a significant interest in the Commission's actions concerning such issues.

portions of the Commission's First R&O addressing Section 224(f), access and denial of access to poles, ducts, conduits and rights-of-way, and Section 224(h), written notification of intended modifications to poles, ducts, conduits and rights-of-way.[5]

2. In general, the Infrastructure Owners seek reconsideration of the Commission's First R&O in the above-captioned proceeding for the following reasons:

- The FCC's requirement that utilities expand capacity to accommodate requests for access is in excess of its statutory authority and is otherwise an impermissible construction of the Pole Attachments Act;
- The FCC's requirement that a utility allow the use of its reserve space until it has an actual need for the space is in excess of its statutory authority and is otherwise an impermissible construction of the Pole Attachments Act;
- The FCC's requirement that electric utilities exercise their powers of eminent domain to expand capacity for third party telecommunications carriers is in excess of its statutory authority and is otherwise an impermissible construction of the statute;
- The FCC failed to provide sufficient notice of agency action in requiring that access to poles be granted within 45 days of a request for access;

---

[5] The Commission's discussion of these issues is found in ¶s 1119-1240 of the First R&O.

- The FCC's suggestion that other than wireline equipment can be placed on a utility's infrastructure is an impermissible construction of the Pole Attachments Act;
- The FCC's determination that a utility may not restrict access to infrastructure to its own highly skilled and trained employees is arbitrary and capricious;
- The Commission improperly promulgated rules implementing Section 224(i) of the Pole Attachments Act in a rulemaking relating to Section 224(h);
- The FCC violated the express language of the Pole Attachments Act in requiring uniform application of the rates, terms and conditions of access because that requirement fails to give effect to the statutory provision for voluntary negotiations, which are not limited by the requirements of the Pole Attachments Act;
- The FCC violated the express language of the Pole Attachments Act in finding that transmission facilities are subject to access; and,
- The FCC violated the plain language of the Pole Attachments Act to the extent it concluded that the use of any single piece of infrastructure for wire communications triggers access to all other infrastructure.

3. In addition, clarification is sought by the Infrastructure Owners with respect to the following issues since the intent of the Commission is unclear from its decision:

- That only reasonable efforts are required to provide 31 days advance notice of non-routine or non-emergency modifications; and,

- That the procedures for resolution of access complaints include full consideration of the position of both the complainant and the respondent.

4. In their Comments and Reply Comments in the rulemaking proceedings below,[3] the Infrastructure Owners also asserted that, to the extent the Commission interpreted Section 224(f) as mandating access to utilities' poles, ducts, conduits and rights-of-way, the statute raises constitutional takings questions. Although the Commission held that Section 224(f)(1) does, in fact, mandate access to utilities' poles, ducts, conduits and rights-of-way, unless one of the exceptions provided in Section 224(f)(2) for denial of access is applicable, see, e.g., First R&O, ¶ 1187, it declined to address the constitutionality of mandated access, finding that it did not have jurisdiction to decide the constitutionality of a federal statute. Id. Because the FCC has already acknowledged its lack of jurisdiction to address the constitutionality of mandated access, the Infrastructure Owners have not argued that question here. The failure to argue the issue should not, however, be interpreted as an admission on the part of the Infrastructure Owners that

---

[3] Notice of Proposed Rulemaking, In the Matter of Implementation of the Local Competition Provisions in the Telecommunications Act of 1996, CC Docket No. 96-98, released April 19, 1996) ("NPRM").

Section 224(f)(1) is constitutionally firm; nor should the omission to argue the issue be construed as a waiver of any right to challenge the constitutionality of Section 224(f)(1) in any other proceeding or forum.[8] Further, the Infrastructure Owners submit that the FCC exceeded its statutory authority in construing Section 224(f)(1) as mandating access to utilities' poles, ducts, conduits, and rights-of-way. See, e.g., 24 F.3d 1141 (D.C. Cir. 1994) (statutes should be construed to defeat administrative orders that raise substantial constitutional questions).[9]

5. The above-referenced aspects of the Commission's First R&O, if allowed to stand, will have direct, adverse impacts on the Infrastructure Owners. For this reason and in light of their participation in the rulemaking proceedings below, the

---

[8] The Commission's statement that a "utility's obligation to permit access under section 224(f) does not depend upon the execution of a formal written attachment agreement with the party seeking access," First R&O, ¶ 1160, further supports the constitutional taking argument. The permanent physical occupation of a utility's infrastructure without any type of an agreement as to the terms and conditions of access (especially an allocation of risk and liability) constitutes a gross invasion of private property. Such an invasion is a taking without regard to the public interest involved. See Loretto v. Teleprompter Manhattan CATV Corp., 458 U.S. 419, 426 (1982). The Infrastructure Owners seek reconsideration and rescission of the Commission's finding that a written agreement is not required before the access obligation is triggered; the Commission should find that access may not be granted to a utility's infrastructure absent a binding agreement setting forth the rates, terms and conditions of access.

[9] Wisconsin Electric Power Company does not join in the constitutional argument.

Infrastructure Owners have standing to seek reconsideration and clarification of the First R&O, as fully discussed herein.[8]

ARGUMENT

I. Applicable Legal Standards

6. An agency construing a statute should be mindful of the two-step inquiry set forth by the Supreme Court.[9] The first step is to determine if Congress has directly spoken to the issue. If the intent of Congress is clear, either from the language of the statute itself or from the use of "traditional tools of statutory construction," an agency, like a reviewing court, must give effect to the unambiguously expressed will of Congress.[10] Furthermore, courts require that an agency adequately articulate the reasons underlying its construction of a statute so that a reviewing court can properly perform the analysis set forth in Chevron.[11]

7. In the sections that follow, the Infrastructure Owners demonstrate that the Commission has failed to follow these well-settled principles of statutory construction in a number of

---

[8] See Panhandle Eastern Pipeline Co., 4 FCC Rcd 8087, 8088 (1989).

[9] Chevron, U.S.A., Inc. v. NRDC, Inc., 467 U.S. 837 (1984).

[10] ACLU v. Federal Communications Comm'n, 823 F.2d 1554, 1568 (D.C. Cir. 1987) (citing Landreth Timber Co. v. Landreth, 471 U.S. 681, 685 (1985)).

[11] See Acme Die Casting v. NLRB, 26 F.3d 162, 166 (D.C. Cir. 1994); Leeco v. Hays, 965 F.2d 1081, 1085 (D.C. Cir. 1992) ("In the absence of any explanation justifying [the agency's position] as within the purposes of the act . . . , we are unable to sustain the Commission's decision as reasonably defensible.")

instances in promulgating rules to implement new Sections 224 f and 224(h) of the Pole Attachments Act. Accordingly, the Commission must use the process of reconsideration and clarification to correct clear errors in its decision.

II. Reconsideration Is Mandated Because the Commission Exceeded Its Statutory Authority

A. The Commission Exceeded Its Statutory Authority in Requiring that Utilities Expand Capacity to Accommodate Requests For Access

8. The Commission's determination that utilities must expand capacity to accommodate requests for access is contrary to the express intent of Congress. In the First R&O, the Commission reasoned that because "[a] utility is able to take the steps necessary to expand capacity if its own needs require such expansion[,] [t]he principle of nondiscrimination established by Section 224(f)(1) requires that [a utility] do likewise for telecommunications carriers and cable operators."[12] Based on this reasoning, the Commission determined that "lack of capacity on a particular facility does not automatically entitle a utility to deny a request for access," and therefore "before a utility can deny access it must explore all accommodations in good faith."[13]

9. The Commission's interpretation of the nondiscrimination provision fails to give effect to the limitations set forth in Section 224(f)(2). The plain language

---

[12] First R&O, ¶ 1162.

[13] Id.

of Section 224(f)(2) clearly gives a utility the right to deny access based on insufficient capacity. Section 224(f)(2) states:

> Notwithstanding paragraph (1), a utility providing electric service may deny a cable television system or any telecommunications carrier access to its poles, ducts, conduits, or rights-of-way, on a non-discriminatory basis where there is insufficient capacity and for reasons of safety, reliability and generally applicable engineering purposes.

The only qualification that Congress included in this section is that any denial of access due to insufficient capacity must be done on a "nondiscriminatory basis." This language is unambiguous and, as such, lends itself to only one interpretation. An electric utility has the right to deny access if it determines that there is insufficient capacity, so long as that determination is made on a nondiscriminatory basis.

10. Although the plain language of the statute includes only one qualification, the Commission's interpretation reads another substantial qualification into it. Under the Commission's interpretation, Section 224(f)(2) would read as follows:

> Notwithstanding paragraph (1), a utility providing electric service may deny a cable television system or any telecommunications carrier access to its poles, ducts, conduits, or rights-of-way, on a non-discriminatory basis where there is insufficient capacity, **and the utility cannot reasonably modify its facility to increase such capacity**, and for reasons of safety, reliability and generally applicable engineering purposes.

If Congress had intended to qualify a utility's right to deny access in the manner suggested by the FCC, Congress would have drafted the statute to include such language.

11. Section 224(f)(2) manifests Congress's understanding that "a utility providing electric service" must be given wide latitude in making determinations about access to its infrastructure because of the nature and importance of the underlying service for which the infrastructure is used -- electric service. Congress intended to bestow on electric utilities the "right" to make this determination without having to justify a decision not to expand its capacity. Section 224(f)(2) reveals Congress's conclusion that the determination of whether sufficient capacity exists to accommodate access to a pole, duct, conduit or right-of-way must be left to the judgment of the electric utility, based on its assessment of whether access comports with safety, reliability and generally applicable engineering standards.

12. A second glaring fault in the Commission's logic is its attempt to expand the nondiscrimination principle in Section 224(f)(1) so that a telecommunications carrier requesting access is afforded the same infrastructure rights as a utility engaged in its core utility services. In fact, this interpretation of the nondiscriminatory access provision of Section 224(f)(1) conflicts with Congress's intent. Congress expressly addressed the issue of nondiscrimination with respect to a utility subsidiary that offers telecommunications or cable television services, by requiring that a utility treat that subsidiary in the same manner as it does other providers of such services. The Commission itself observed that "the

nondiscrimination requirement of Section 224(f)(1) . . . prohibits a utility from favoring itself or its affiliates with respect to the provision of telecommunications and video services."[14] Thus, a utility's ability to expand capacity for its core utility services should have no bearing on, nor confer a similar right on, telecommunications carriers seeking access to such facilities.

B. The Commission Exceeded Its Statutory Authority by Requiring a Utility to Allow the Use of Its Reserve Space Until It Has an Actual Need for the Space

13. In the First R&O, the Commission determined to allow "an electric utility to reserve space if such reservation is consistent with a bona fide development plan that reasonably and specifically projects a need for that space in the provision of its core utility service."[15] The Commission further decided that "[t]he electric utility must permit use of its reserved space by cable operators and telecommunications carriers until such time as the utility has an actual need for that space."[16]

14. As discussed above, Congress plainly and unambiguously gave electric utilities the right to make capacity determinations when considering requests for access. A denial need only be administered in a nondiscriminatory manner vis-a-vis cable operators and telecommunications carriers. Nothing in Section 224(f)(2) limits a utility's ability to plan for future expansion

---

[14] First R&O, ¶ 1168 (emphasis added).

[15] First R&O, ¶ 1169.

[16] Id.

by reserving capacity. Indeed, Congress was well aware of an electric utility's need to reserve capacity when it gave utilities the right to deny access based on insufficient capacity. If it had intended to change the status quo, Congress would have included language in the statute that could reasonably be interpreted to limit this utility practice. Thus, the Commission's determination to further qualify a utility's right to reserve capacity violates Congressional intent.

15. As noted above, the Commission limited a utility's right to use its reserve space to instances where such reservation is "consistent with a bona fide development plan that reasonably and specifically projects a need for that space." This standard is vague, ambiguous and unworkable, and ignores the realities of a utility's core business of providing electric service. Many utilities' development plans are under constant review and revision to account for regulatory and market uncertainties caused by federal efforts to deregulate the electric industry. By restricting a utility's right to reserve capacity, the Commission is forcing a utility to either expand its business based on sheer speculation of load growth, or to face repeated complaints by entities seeking access to reserve capacity. The provision of safe, reliable electric service cannot be conditioned on a utility's ability to satisfy this unworkable standard.

16. As a practical matter, the reservation of capacity must remain within the exclusive authority of the utility, and any

reservation of space by a utility should be considered presumptively reasonable. Just because a utility is not currently using "capacity" does not mean that such capacity should be available for use by others, such as telecommunications carriers and cable companies. Utilities routinely allocate certain space to be used in the event of an emergency. For example, if certain ducts collapse, the utility's contingency plan calls for the immediate substitution of other ducts. Surely, this space cannot be considered "reserve." At a minimum, the Commission must clarify that the obligation to provide access does not extend to space that is needed for emergency purposes.

17. The idea that a party can use space on an interim basis is simply impractical and unworkable. Once telecommunications carriers and cable companies are using a utility's infrastructure, and serving telecommunications interests, a utility simply will not be able to recapture such reserved space in the time necessary to effectively serve its core utility business. Indeed, according to the Commission, at the time the utility seeks to recapture its reserve space, the utility must provide the user an "opportunity to . . . maintain its attachment" by expanding capacity.[17] This requirement could be used by attaching entities to claim that the utility must allow the user to stay on or in the facility until the utility construct additional capacity. A utility's ability to provide dependable service would be severely threatened by such

---

[17] First R&O, ¶ 1169.

an obligation because of the significant engineering and construction time involved in expanding capacity.

18. Even if the Commission crafted a rule that allowed a utility to immediately recapture its reserve space, in the real world, once a telecommunications carrier or cable company is using a utility's infrastructure, it will be difficult to reclaim that capacity. Telecommunications carriers simply will not vacate a utility's facility short of litigation if the withdrawal will likely result in the interruption of service to telecommunications customers. For this reason, any requirement to allow telecommunications carriers and cable operators access to a utility's reserve space will effectively eliminate a utility's use of that space altogether. As such, and in light of the above reasons, the Commission's determination on access to reserve space is arbitrary and capricious and must be reversed.

C. The FCC Has No Authority to Require Electric Utilities to Exercise Their Powers of Eminent Domain to Expand Capacity[18/]

19. In its discussion of access to poles, conduits, and rights-of-way in the First R&O, the FCC articulates its view of utilities' obligations with regard to private property rights. Specifically, the FCC states:

18/ Wisconsin Electric Power Company does not join in this section of the parties' Petition for Reconsideration and/or Clarification.

> We believe that a utility should be expected to exercise its eminent domain authority to expand an existing right-of-way over private property in order to accommodate a request for access, just as it would be required to modify its poles or conduits to permit attachments.[19]

In support of this position, the FCC further states:

> Congress seems to have contemplated an exercise of eminent domain authority in such cases when it made provisions for an owner of a right-of-way that 'intends to modify or alter such...right-of-way...'.[20]

The FCC's position goes well beyond Congressional intent or any reasonable construction of Section 224 with regard to access to utility infrastructure. Requiring electric utility owners to not only provide access to established rights-of-way but also to condemn properties at the request of telecommunications carriers is without any support in the statute.[21] Accordingly, this position must be reconsidered.

20. As the FCC notes in the First R&O, the scope of a utility's ownership or control of an easement or right-of-way is

---

[19] First R&O, at ¶ 1181, (footnote omitted).

[20] Id. (footnote omitted).

[21] Although the Pole Attachments Act was enacted some 18 years ago, requiring utilities to exercise their eminent domain authority to expand rights-of-way has never been considered a part of that statute. Typical pole attachment agreements require the party seeking access to secure whatever additional rights are needed by that party before access can be granted consistent with the underlying easement or right-of-way. This practice correctly assigns the obligation of securing additional rights to the party requiring those rights. The 1978 Pole Attachments Act and the 1996 amendments to it permit 'piggybacking' on the utilities' existing poles, ducts, conduits and rights-of-way -- they do not require utilities' to secure additional poles, ducts, conduits and rights-of-way.