4.7. Number of Satellites

Expressway™'s global system is comprised of 14 satellites at ten orbital positions, which will provide worldwide coverage from geostationary orbit interconnected through ISLs. Each satellite is technically identical, capable of using the same frequency bands, and is designed to support on-orbit antenna beam reconfiguration for maximum flexibility of service. On-orbit antenna beam reconfiguration was chosen so that satellites can meet changing user requirements.

4.8. Satellite Operational Lifetime

Each Expressway™ satellite is designed to meet all specified operational requirements for a 15 year period in orbit. A small degradation in performance is expected after this time. This has been determined by a conservative estimate concerning the effect of a synchronous orbit environment on the solar array, battery charge discharge cycling, and TWT wear. The propellant remaining after transfer orbit allows station keeping for 15 years. The propellant required for on-station positioning is governed by north/south inclination requirements, orbital position change, and de-orbit requirements.

All critical electronics and components employ redundant units. For TT&C, a two-for-one redundancy is typically required. The satellite electrical design follows well established criteria for part selection. Hardware is based on existing units which have already experienced successful missions after years in orbit.

The on-board Xenon Ion Propulsion System (XIPS) fuel reserve will be used to place the satellite in a supersync orbit at the satellite end-of-life.

4.9. Earth Segment

4.9.1. Satellite Command and Control

Command and control of Expressway™ satellites will be performed via Satellite Control Facilities (SCF) as illustrated in Figure 4.9.1-1. TT&C will take place at Ku-band using a portion of the requested spectrum at the lower edges of the bands. Each SCF station will be linked to an Operations Control Center (OCC). This center will also be responsible for the command and control of all Expressway™ satellites. TT&C link performance and parameters are given in Appendix A.

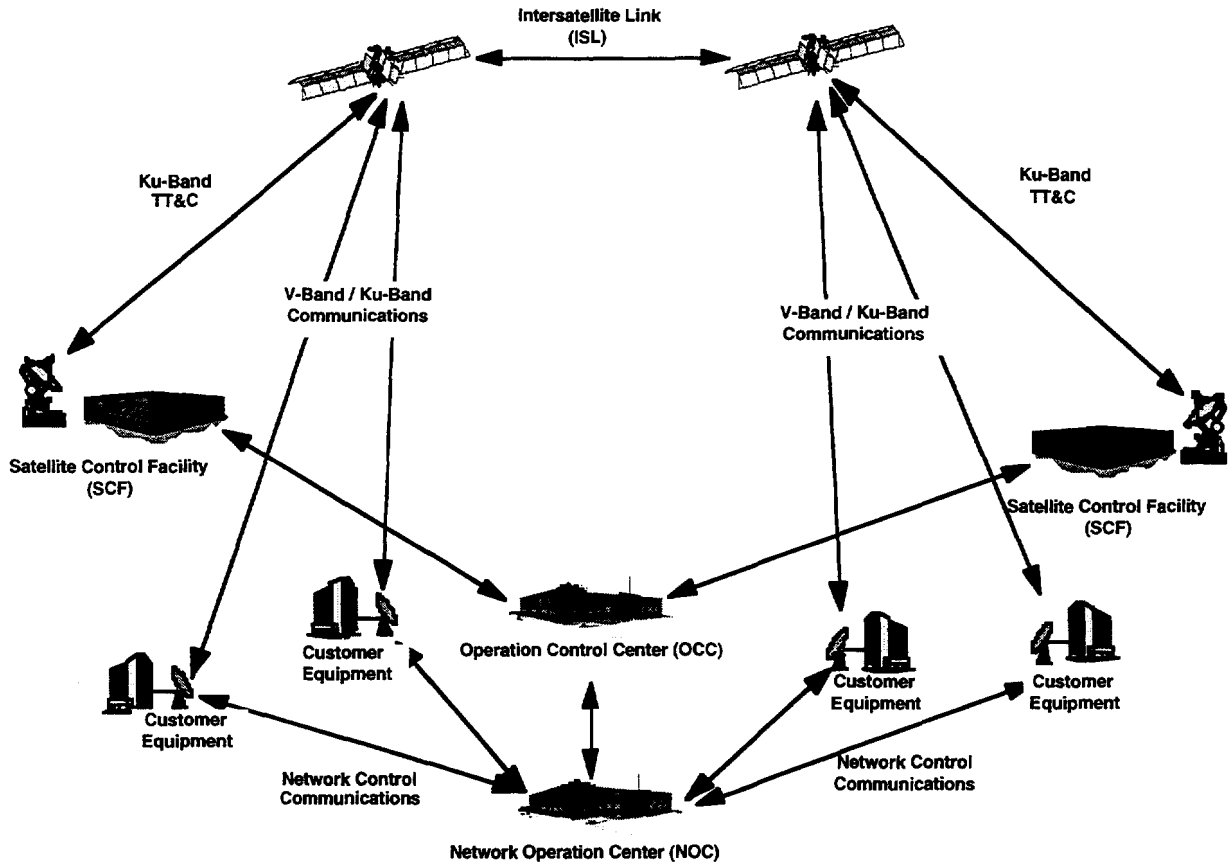

Figure 4.9.1-1. Earth Segment

4.9.2. Payload Management

Operation and management of Expressway™ communications system resources will be performed from a Network Operations Center (NOC). The NOC will manage all communications functions including circuit initiation, connection, teardown, and customer interfacing including service requests and billing. This center will maintain communications with customer equipment. It will be responsible for keeping track of all circuit connections, the allocation of Ku-band, and terrestrial resources. It will monitor service quality in conjunction with monitoring equipment located at a number of sites within each of the satellite's coverage areas. Finally, it will provide and maintain the TDMA circuit switch

routing table that is uploaded to the satellite onboard processor via the SCF and Ku-band TT&C link. The routing table will control all circuit connections and traffic through Expressway™'s V-band and Ku-band links as well as the intersatellite links.

4.9.3. Customer Equipment

Due to limited availability of satellite power and bandwidth, current ground terminals are generally restricted in the data capacity they can offer. The Expressway™ system provides an order of magnitude increase in data capacity while maintaining reasonable size and cost of user terminals.

The services offered by Expressway™ will be mainly point-to-point, high speed links with rates of T1 to OC-3 or higher. Rates below T1 will be accommodated by terminal multiplexing equipment having the capability to combine them to T1 rates and above. Appendix A provides uplink and downlink power budgets.

Some customer terminals will have either V-band or Ku-band single frequency transmit and receive capability. Others will have capabilities in both bands. Terminals having dual band capacity can be automatically switched from V-band to Ku-band if link availability is below a suitable service level. Ku-band only terminals will also be used outside of the V-band spot beam coverage areas for thin route service. Terminals for both single and dual band frequency operation will use 2.5 meter antennas.

Figure 4.9.3-1 depicts the customer equipment system architecture. At the user interface, a number of terrestrial digital services currently offered or planned

(ATM, frame relay, ISDN, etc.) will be accommodated by equipment modules and interface cards. At the terrestrial network interface level, the customer equipment will support PBX, POTS, analog modems, X.25, LAN, WAN, and Internet (TCP/IP) connections. This allows Expressway™ to offer a full range of services tailored to customer needs.

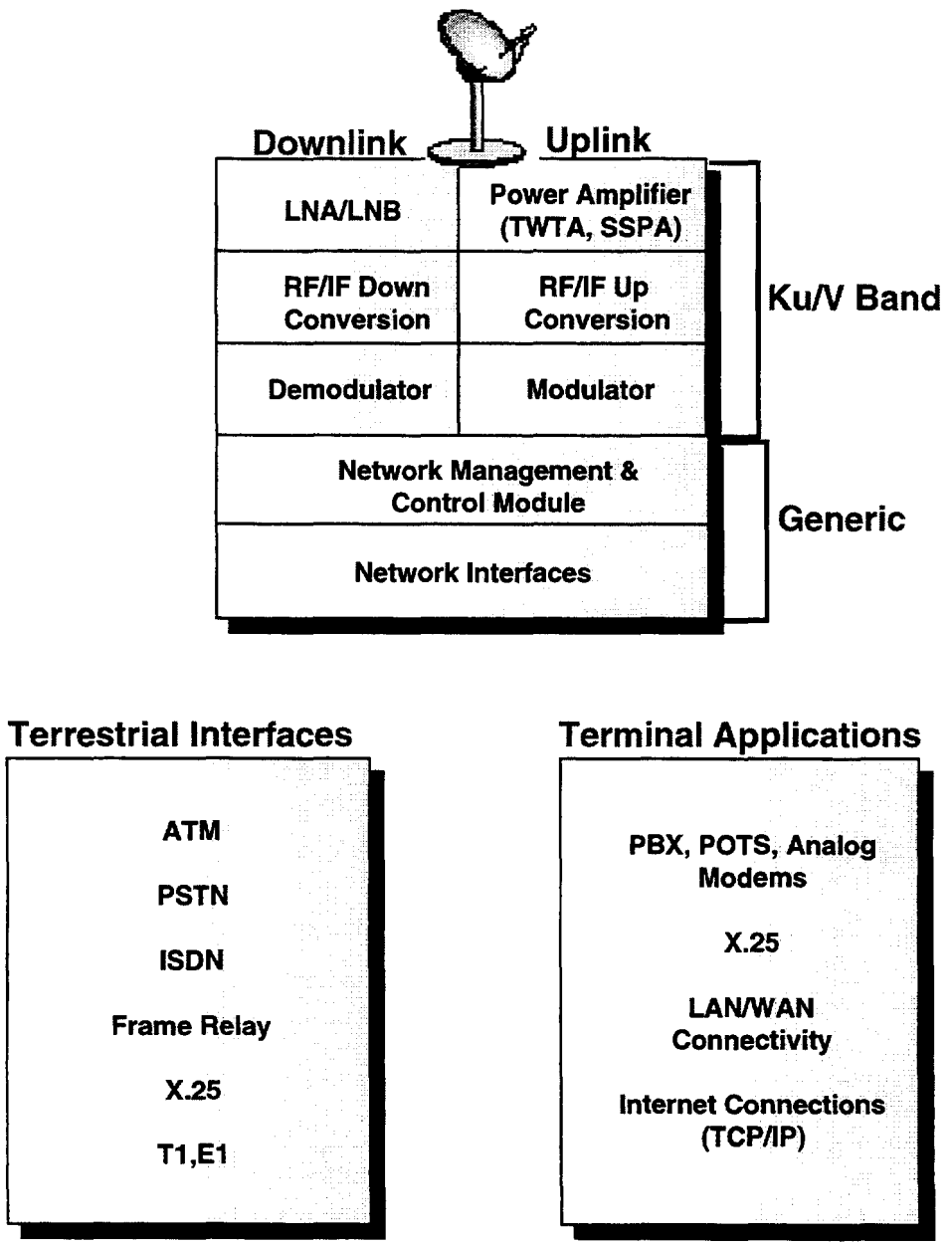

Figure 4.9.3-1. Customer Equipment

For the customer equipment to support all of the services required including billing, maintenance, and other functions, it must be in communication with the NOC. Network control communications will be provided by RF link from the NOC and SCF to the satellite and downlinked to the customer equipment. Terrestrial link connection to the NOC may also be available in the event of an outage on the satellite network control communications link.

To the extent that the 13.75-14.0 GHz band is used for uplinks to Expressway™, due consideration will need to be given by uplink stations to the earth station size and power limits that are imposed on use of this band by both FCC Rules and international Radio Regulations.

4.10 Link Availability

4.10.1. Rain Effects

Expressway™ will take a system approach to the problem of availability. Areas covered by spot beams will have link monitoring terminals. During weather events these monitor sites will send link quality messages to the Expressway™ Satellite Control Facility (SCF) and Network Operations Center (NOC). If rain attenuation exceeds the link budget allocation at V-band, the satellite and customer equipment can be commanded to provide service via the Ku-band payload until the weather front passes, at which time the service would be restored at V-band.

Link availability analyses were performed for several cities around the world to determine rain loss margins for each. The results of these analyses based on a 95% availability at V-band appear in Table 4.10.1-1

Table 4.10.1-1. V-band Design Margins for Rain in Various Cities

Country	City	Rain Loss Margin (in dB) for 95% link availability	
		s-E	E-s
Argentina	Buenos Aires	2.2	2.7
Brazil	Rio de Janeiro	3.8	4.3
China	Beijing	1.5	1.8
Egypt	Cairo	1.5	1.8
India	Bombay	3.8	4.2
Italy	Rome	2.2	2.9
Japan	Tokyo	2.0	2.4
Russia	Moscow	1.6	1.8
UK	London	2.2	2.9
US	Chicago	2.2	2.8
US	Dallas	3.1	3.6
US	Denver	0.8	1.0
US	Los Angeles	1.4	1.7
US	New York	2.5	3.1

4.10.2. Cloud and Gaseous Effects

Because the additive effect of rain attenuation and cloud and gaseous effects at low elevation angles would degrade link availability unacceptably, the Expressway™ design restricts the minimum V-band user operating elevation angle to 32 degrees or higher.

4.11. LAUNCH SEGMENT

Specific launch services have not been selected at this time. The Expressway™ bus is compatible with a variety of commercially available launch vehicles.

Interference Analysis

5. INTERFERENCE ANALYSIS

5.1. EXPRESSWAY™ SYSTEM SPECTRUM

Expressway™ will operate as a geostationary system in the FSS. The Earth-to-space service links will operate at 47.2-50.2 GHz and on 500 MHz of bandwidth that is allocated for FSS uplinks within the frequency range 12.75-13.25 GHz and 13.75-14.5 GHz. The space-to-Earth service links will operate at 39.5-42.5 GHz[4] and on 500 MHz of bandwidth that is allocated for FSS downlinks within the frequency range 10.7-12.75 GHz.[5]

---

[4] In IB Docket 97-95, the Commission is currently considering various options with respect to the 36-51.4 GHz bands including the addition of FSS allocations at 40.5-42.5 GHz. The V-band spectrum requested for Expressway™ was chosen to reflect the current HCI position regarding the NPRM as presented in HCI's Reply Comments submitted June 3, 1997. HCI respectfully reserves the right to conform this application to reflect the outcome of that proceeding and/or any changes in the international Radio Regulations. The Commission's Public Notice establishing a cut-off for additional applications in the 36-51.4 GHz frequency band, DA 97-1551 (July 22, 1997), states that: "Applicants filing by the cut-off will be afforded an opportunity to amend their applications, if necessary, to conform with any requirements and policies that may be adopted subsequently for space stations in these bands."

[5] The allocations for satellite use of the 11.7-12.5 GHz band vary between FSS and BSS in different Regions of the world. In any given Region, HCI proposes to use only the portion that is allocated for FSS use in that Region, subject to that band being available at the desired orbital position. For example, HCI does not seek to use the 11.7-12.5 GHz band in Region 1 (at the proposed 8.5° E, 48°E, and 63.5° E orbital positions for Expressway™) because that band is allocated currently only for BSS service.

At the Ku-band, the 12.75-13.25 GHz, 10.7-10.95 GHz and 11.2-11.45 GHz bands are planned for worldwide use under Appendix 30B of the international Radio Regulations.[6] The primary purpose of the Plan associated with Appendix 30B is to accommodate national satellite communications systems, but the provisions of the Appendix are flexible enough to permit Administrations to submit filings for systems which are not already defined in the Plan. These systems may be assigned orbital positions under the Plan provided that harmful interference will not result between such a system and any satellite network that is defined in the Plan and brought into operation by an Administration, and provided that displacements of any national orbital allotments under the Plan are agreed to by affected Administrations. Article 6, Section III of Appendix 30B includes a procedure for the use of these bands for purposes other than national coverage.

[6] The 10.7-10.95 GHz, 11.2-11.45 GHz and 12.75-13.25 GHz bands already have been allocated by the Commission for FSS. *See* 47 C.F.R § 2.106. HCI's proposed use of the bands (as well as the 10.95-11.2 GHz and 11.45-11.7 GHz bands) by the global Expressway™ system is fully consistent with footnote NG104, which limits use of all those bands to international (i.e., other than domestic) systems. The Commission has previously licensed FSS use of these bands for an international satellite system. *See PanAmSat Licensee Corp.*, DA 96-2124 (released December 17, 1996). To the extent necessary, HCI requests a waiver of the application of NG 104 to this application and will provide whatever supplemental supportive materials that the Commission may require. As demonstrated in this Section 5, Expressway™ will adequately protect existing terrestrial services in the 10.7-11.7 GHz downlink band by complying with existing PFD limits, and will adequately protect existing terrestrial services in the 12.75-13.25 GHz uplink band by coordinating Expressway™ uplinks with those users where appropriate.

The Expressway™ system requires the bandwidth requested in this application on a global basis in order to provide high data rate communications services to its prospective customers. HCI has separately urged the Commission to support changes in the international Radio Regulations to allow worldwide FSS operation in the 40.5-42.5 GHz band that is currently allocated to the BSS. In the event that FSS use is not permitted, HCI intends to specify alternate spectrum for Expressway™ in the 36.0-51.4 GHz band.

In addition to the service links, Expressway™ will use optical ISLs operating in the 1.55 micron wavelength region. The command links will operate in 1.5 MHz near lower edges of the Ku-band FSS Earth-to-space frequencies. The telemetry links will operate in 1.5 MHz near lower edges of the Ku-band FSS space-to-Earth frequencies. The receive beacons will operate in 100 kHz near lower edges of the Ku-band FSS and V-band Earth-to-space frequencies. The transmit beacons will operate in 100 kHz near lower edges of the Ku-band FSS and V-band space-to-Earth frequencies.

5.2. Interference and Sharing Analysis

5.2.1. Intra-Service Interference and Sharing

5.2.1.1. Fixed-Satellite Service

Interference between Expressway™ and other FSS systems can be divided into two basic classes: interference between geostationary (GSO) systems and interference between non-geostationary (NGSO) and GSO systems. The case of interference between GSO systems will be treated first. The main issue pertaining to Expressway™ and other GSO FSS systems in the same frequency bands and

coverage regions is whether or not enough orbital spacing separates satellites from the respective systems to mitigate harmful interference. If the satellites are placed too close to each other, excessive interference will result. The 2° orbital separation commonly used for GSO satellites will be adequate for Expressway™ satellites to share spectrum at V-band with other GSO satellites. An interference analysis demonstrating this capability is contained in Appendix B.

The ground tracks of NGSO satellites do not remain stationary over a single point on the Earth. Instead, they produce multiple ground tracks between north and south latitudes determined by the inclination of the satellite. Therefore, there is a potential for interference with GSO satellite networks such as Expressway™ when the GSO and NGSO systems share frequency bands and polorization. NGSO satellite systems can use interference mitigation techniques such as satellite diversity and avoidance of pointing at the geostationary arc to avoid excessive interference with GSO operations. A number of domestic and international NGSO satellite networks, such as Celestri, SkyBridge, and F-SATMULTI 1A/B, have proposed such sharing techniques.

The Ku-band frequencies used by Expressway™ may include bands allotted for national or subregional use under Appendix 30B of the international Radio Regulations. In that event, Expressway™ will coordinate with other GSO FSS systems operating in the bands pursuant to Appendix 30B to the extent provided under that Appendix. The 2° orbital separation commonly used for GSO FSS satellites should be adequate for satellites operating in the Ku-band.

5.2.1.2. Inter-Satellite Service

For Inter-Satellite Service links only satellite receivers directly in the path of a beam will experience harmful interference. However, as a practical matter, the extremely narrow beamwidths of optical links ensure that satellites will not block the line-of-sight of such a link. For these reasons, and because the orbital positions and/or parameters may differ between systems, the possibility of harmful interference occurring between Inter-Satellite Service links is negligible. Therefore, common usage of the same optical wavelength (1.55 micron) on all Expressway™ satellites is an efficient, practical method for achieving high bandwidth ISL's.

5.2.2. Inter-Service Interference and Sharing

5.2.2.1. Radio Astronomy Service

Radiotelescopes require the use of the 48.94-49.04 GHz band for spectral line observations. The potential for harmful interference from Expressway™ to stations operating in the Radio Astronomy Service is quite low because the listed frequencies are located within a band that Expressway™ uses for Earth-to-space links and the Expressway™ earth station antennas will have very narrow beamwidths. Therefore, Expressway™ should be able to share the 48.94-49.04 GHz band with stations operating in the Radio Astronomy Service.

5.2.2.2. Terrestrial Services

Coordination may be necessary between terrestrial microwave stations and Expressway™ earth terminals to avoid harmful interference. Likewise, harmful interference from Expressway™ space station transmitters into a terrestrial

receiver is possible if the space station does not limit its PFD. Harmful interference into Expressway™ space station receivers from terrestrial microwave transmitters is unlikely due to the high space loss and atmospheric attenuation in the Earth-to-space bands that Expressway™ will use. However, excessive interference into Expressway™ space station receivers from Earth station transmitters of stratospheric fixed service systems, such as SkyStation, is possible if power limits are not imposed upon those transmitters.[7]

Expressway™ will operate in accordance with Sections 25.204, 25.208, and 25.209 of the Commission's Rules and with international Radio Regulations S21.6, S21.8, S21.9, S21.12, and S21.16, as applicable, to avoid harmful interference from Expressway™ into terrestrial services.

[7] In its Second Report and Order in ET Docket No. 94-124, RM-8308, 8784 (released July 21, 1997), the Commission designated the 47.2-48.2 GHz band for wide-area licensing, but has not yet established the terms for licensing this band or for sharing the band among different users.

5.2.2.3. Earth Exploration-Satellite and Space Research Services

The EESS and SRS have primary international allocations at 40.0-40.5 GHz (Earth-to-space). The main source of interference will be from EESS and SRS earth station transmitters to Expressway™ earth station receivers. Expressway™ will coordinate with stations in the EESS and SRS to minimize interference to its space-to-Earth links.

Stations in the SRS operating at 13.75-14.0 GHz that received authorization to operate from the Commission on or before January 31, 1992 are assigned frequencies on a co-primary basis with stations in the FSS so long as such stations in the SRS continue in service. Until January 1, 2000, EESS and SRS NGSO space stations operating at 13.75-14.0 GHz are assigned frequencies on a co-primary basis with stations in the FSS.

HCI will work with EESS and SRS station operators on a case-by-case basis to resolve any coordination issues that may arise between Expressway™ and stations operating in these services.

5.2.2.4. Radiolocation and Radionavigation Services

These services have co-primary U.S. allocations along with FSS at 13.75-14.2 GHz. In addition, these services have co-primary international allocations at 13.75-14.3 GHz. Unlike the terrestrial radio services discussed above, operations in the radiolocation or radionavigation services may occur at any elevation angle due to radar and direction-finding transmissions from or to aircraft. HCI will work with operators of these services to resolve any coordination issues concerning

emissions in these bands, as necessary and applicable, where both FSS and either the radiolocation or the radionavigation service have co-primary frequency allocations.

5.2.2.5. Broadcasting-Satellite Service

The FSS has a primary international allocation for space-to-Earth emissions at 12.5-12.75 GHz in Region 3, and so does the BSS pursuant to international Resolution 33. Since Expressway™ may operate at 12.5-12.75 GHz for space-to-Earth emissions in Region 3, HCI will resolve any coordination issues with stations operating in the BSS at 12.5-12.75 GHz on a case-by-case basis.

5.3. Spurious and Out-of-Band Emissions

Expressway™ will comply with the emission limitations specified in Section 25.202(f) of the Commission's rules.

Regulatory Qualifications

6. REGULATORY QUALIFICATIONS

6.1 LEGAL QUALIFICATIONS

HCI's legal qualifications are a matter of record before the Commission, and HCI will provide any additional information regarding its qualifications that the Commission may require.

6.2 COMPLIANCE WITH INTELSAT ARTICLE XIV

HCI recognizes that the Expressway™ system may be subject to consultation requirements under Article XIV of the INTELSAT Agreement and will provide appropriate information to facilitate any such consultations.

6.3 NON-COMMON CARRIER STATUS

HCI will sell or lease Expressway™ capacity to its customers on an individualized basis and will not hold itself out to serve the public indiscriminately. In accordance with the Commission's DISCO I Report and Order, 11 FCC Rcd. 2429, 2436 (1996), and Section 25.114(c)(14), HCI elects to offer the entire capacity of the Expressway™ system on a non-common carrier basis.

This page is intentionally blank.

7. MILESTONE SCHEDULE

HCI proposes to implement the global Expressway™ system according to the following plan. The dates by which the following goals are scheduled to be achieved are as follows.

Table 7-1. Expressway™ Major Milestones

Milestone	Milestone Completion (Months After Authority to Proceed)
Commence construction of first satellite	ATP + 12
Construction of first satellite complete	ATP + 48
First satellite launch	ATP + 50
First satellite in service	ATP + 52
Subsequent satellites	Every 4 months thereafter

This page is intentionally blank.

System Cost

8. PROJECTED SYSTEM COST

The table below sets out in detail the estimated capital investment and the first year operating expenses for the 14 Expressway™ satellites. The capital expenditure for space and ground segments is projected to be $3.85B, which includes the construction cost of the satellites and the respective launch, launch vehicle service, launch insurance, and associated ground equipment costs. First year operating costs are estimated at $75M. Satellite costs are derived from estimates of the manufacturer, Hughes Space and Communications Company, a unit of Hughes Electronics Corporation. The costs of the launch vehicle and other associated items are based on industry practice. The ground segment costs are based on projected costs for modification to Network Operation Control Centers and TT&C earth stations. Customer equipment costs are not part of this application.

Table 8-1. Expressway™ Investment

Capital Expenditures	$M
• Spacecraft (14), launch and insurance	$3,600
• Satellite Control	$ 175
• Network Operations & Control	$ 50
• Customer Equipment Development	$ 25
Total development cost	$3,850
First year operating cost	$ 75
Grand Total	$3,925

This page is intentionally blank.